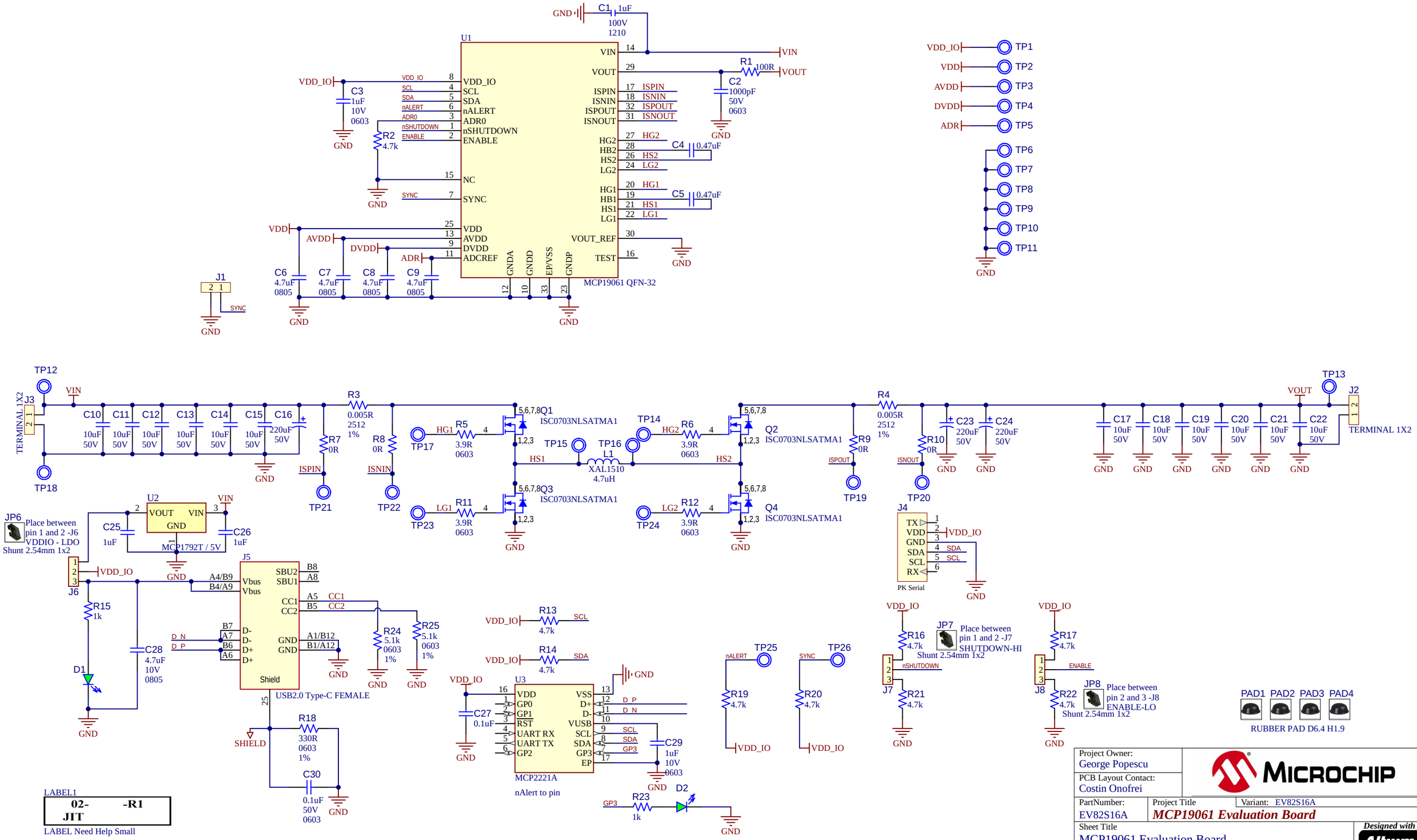
U1
MCP19061 QFN-32
VIN
VOUT
ISPIN
ISNIN
ISPOUT
ISNOUT
HG2
HB2
HS2
LG2
HG1
HB1
HS1
LG1
VOUT_REF
TEST
VDD_IO
SCL
SDA
nALERT
ADR0
nSHUTDOWN
ENABLE
NC
SYNC
VDD
AVDD
DVDD
ADCREF
GNDA
GNDD
EP/VSS
GNDP
C1 1uF 100V 1210
C2 1000pF 50V 0603
C3 1uF 10V 0603
C4 0.47uF
C5 0.47uF
R1 100R
R2 4.7k
C6 4.7uF 0805
C7 4.7uF 0805
C8 4.7uF 0805
C9 4.7uF 0805
J1
TP1 VDD_IO
TP2 VDD
TP3 AVDD
TP4 DVDD
TP5 ADR
TP6
TP7
TP8
TP9
TP10
TP11
TP12
TP13
TP14
TP15
TP16
TP17
TP18
TP19
TP20
TP21
TP22
TP23
TP24
TP25
TP26
J3 TERMINAL 1X2
J2 TERMINAL 1X2
C10 10uF 50V
C11 10uF 50V
C12 10uF 50V
C13 10uF 50V
C14 10uF 50V
C15 10uF 50V
C16 220uF 50V
R3 0.005R 2512 1%
R4 0.005R 2512 1%
R7 0R
R8 0R
R9 0R
R10 0R
C23 220uF 50V
C24 220uF 50V
C17 10uF 50V
C18 10uF 50V
C19 10uF 50V
C20 10uF 50V
C21 10uF 50V
C22 10uF 50V
Q1 ISC0703NLSATMA1
Q2 ISC0703NLSATMA1
Q3 ISC0703NLSATMA1
Q4 ISC0703NLSATMA1
R5 3.9R 0603
R6 3.9R 0603
R11 3.9R 0603
R12 3.9R 0603
L1 XAL1510 4.7uH
HG1
HG2
LG1
LG2
HS1
HS2
U2 MCP1792T / 5V
C25 1uF
C26 1uF
JP6 Place between pin 1 and 2 -J6 VDDIO - LDO Shunt 2.54mm 1x2
J6
R15 1k
C28 4.7uF 10V 0805
D1
J5 USB2.0 Type-C FEMALE
Vbus
SBU2
SBU1
CC1
CC2
D-
D+
GND
Shield
A4/B9
B4/A9
B8
A8
A5
B5
B7
A7
B6
A6
A1/B12
B1/A12
D_N
D_P
R24 5.1k 0603 1%
R25 5.1k 0603 1%
SHIELD
R18 330R 0603 1%
C30 0.1uF 50V 0603
LABEL1
02- -R1
JIT
LABEL Need Help Small
U3 MCP2221A
nAlert to pin
VDD
GP0
GP1
RST
UART RX
UART TX
GP2
VSS
VUSB
GP3
EP
C27 0.1uF
C29 1uF 10V 0603
R13 4.7k
R14 4.7k
R23 1k
D2
R19 4.7k
R20 4.7k
R16 4.7k
R21 4.7k
JP7 Place between pin 1 and 2 -J7 SHUTDOWN-HI Shunt 2.54mm 1x2
J7
R17 4.7k
R22 4.7k
JP8 Place between pin 2 and 3 -J8 ENABLE-LO Shunt 2.54mm 1x2
J8
J4 PK Serial
TX
RX
PAD1
PAD2
PAD3
PAD4
RUBBER PAD D6.4 H1.9
Project Owner: George Popescu
PCB Layout Contact: Costin Onofrei
MICROCHIP
PartNumber: EV82S16A
Project Title: MCP19061 Evaluation Board
Variant: EV82S16A
Sheet Title: MCP19061 Evaluation Board
Size B
SCH #: 02-01039
PCB #: 04-12109
Rev: 1
Date: 2/9/2024
Sheet 1 of 1
File: MCP19061.SchDoc
Designed with Altium
Altium.com