SPECIAL PACKAGING INSTRUCTION

CODE ID	SPI NO (TPO)
98748	F 00-656-6170
	SHEET 1 OF 3

PART OR DRAWING NO.	NATIONAL STOCK NO.	CURR REV	
5-40678-19	1680-00-656-6170 FL	A	ILL P. BROWNING
ITEM NOMENCLATURE		ORIG DATE	PS M. O'NEAL
NOZZLE ASSY. KC-135		99085	CHK H. HOLINSWORTH
			AUTH C. TROTTER

PRESERVATION IAW MIL-STD-2073
SERVICEABLE METHOD: 52
UNSERVICEABLE METHOD: 10

QUP 001

ICQ 000

CLEANING & DRYING IAW MIL-STD-2073

PRESERVATIVE N/A

MARKING IAW MIL-STD-129

SPECIAL MARKINGS:

A) SPI NO. F 00-656-6170
B) REUSABLE CONTAINER AND DUNNAGE DO NOT DESTROY.
C) NOT FOR OUTSIDE STORAGE.
D) METHOD 50.

CLOSURE

LEVEL A: IAW ASTM-D-1974
LEVEL B: IAW ASTM-D-1974

PACKING AS SPECIFIED BELOW AND BILL OF MATERIALS

LEVEL	SPEC	STYLE	TYPE	CL	VRTY	GR	TR
A	ASTM-D-5118	RSC	CF	WR	SW	V3C	N/A
B	ASTM-D-5118	RSC	CF	WR	SW	V3C	N/A

	LEVEL A	LEVEL B
GROSS CU FT	1.663	1.663
GROSS WT LBS	42	42
DESIGN FRAGILITY G	N/A	N/A

CNTNR I.D.	LENGTH	WIDTH	DEPTH
LEVEL A:	10 3/4	10 3/4	22 3/4
LEVEL B:	10 3/4	10 3/4	22 3/4

CNTNR O.D.	LENGTH	WIDTH	DEPTH
LEVEL A:	11	11	23 3/4
LEVEL B:	11	11	23 3/4

ITEM DIM	8	8	20 1/4
ITEM WT LBS	38 LBS.		

REVISIONS		
LTR	DESCRIPTION	DATE
	NEW	99085
A	UPDATE SPECS. CORRECT DETAIL	12223

PART NO.	QTY.	NOMENCLATURE OR DESCRIPTION	SIZE (INCHES UNLESS SPECIFIED) TOLERANCES ON FRAC. ± 1/8, DECIMAL ± .10, ANGLES ± 1°.	MATERIAL SPECIFICATION
9	32	DESSICANT	32 UNITS	MIL-D-3464
8	A/R	ADHESIVE	AS REQUIRED	A-A-1936 OR EQUIVALENT
7	A/R	BARRIER	AS REQUIRED	MIL-PRF-121 ▷2
6	1	TOP INSERT	10 X 10 X 1 1/8	ASTM-D-4727 DETAIL "B" ▷1
5	1	BOTTOM INSERT	10 X 10 X 1 1/8	ASTM-D-4727 DETAIL "A" ▷1
4	2	FILLER PAD	10 X 10 X 9/16	ASTM-D-4727 ▷1
3	1	CARTON	I.D. 10 X 10 X 22	ASTM-D-5118
2	1	BAG	AS REQUIRED	MIL-PRF-131
1	1	CONTAINER I.D.	10 3/4 X 10 3/4 X 22 3/4	SEE LEVEL OF PACK

NOTES:

1) REQUIREMENTS FOR 4, 5, AND 6 TO BE: ASTM-D-4727 OR MAY SUBSTITUTE ASTM-D-59136 FOR P/N'S 5 AND 6 ONLY.
2) WRAP ITEM WITH BARRIER P/N 7.

SPI NO. F 00-656-6170

SPECIAL PACKAGING INSTRUCTION	CODE ID 98748	SPI NO (TPO) F 00-656-6170
ITEM NOMENCLATURE NOZZLE ASSY. KC-135		SHEET 2 OF 3

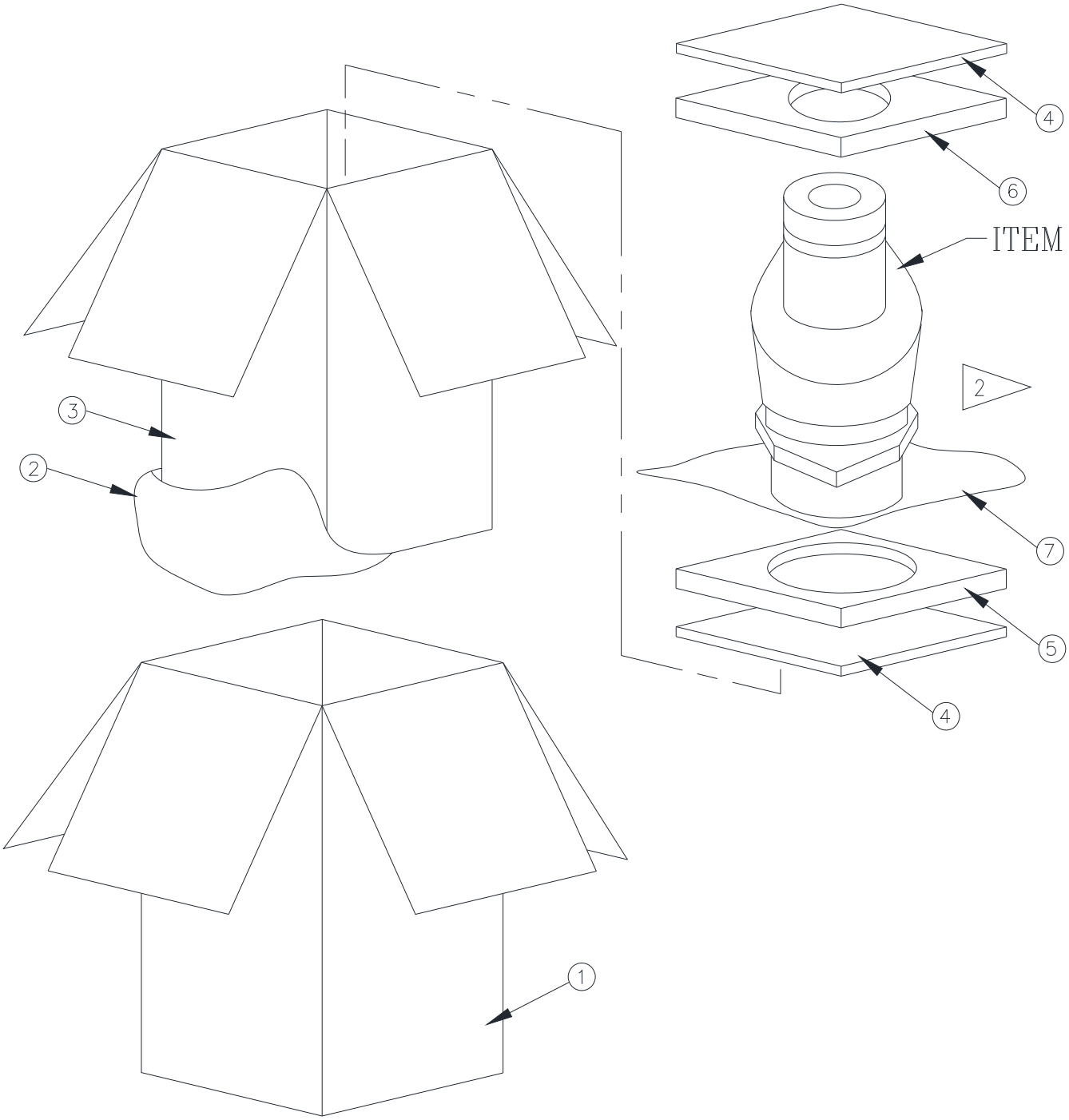

DD form MAR 87 2169 MOD

COMPUTER GENERATED

SPECIAL PACKAGING INSTRUCTION	CODE ID 98748	SPI NO (TPO) F 00-656-6170
ITEM NOMENCLATURE NOZZLE ASSY. KC-135		SHEET 3 OF 3

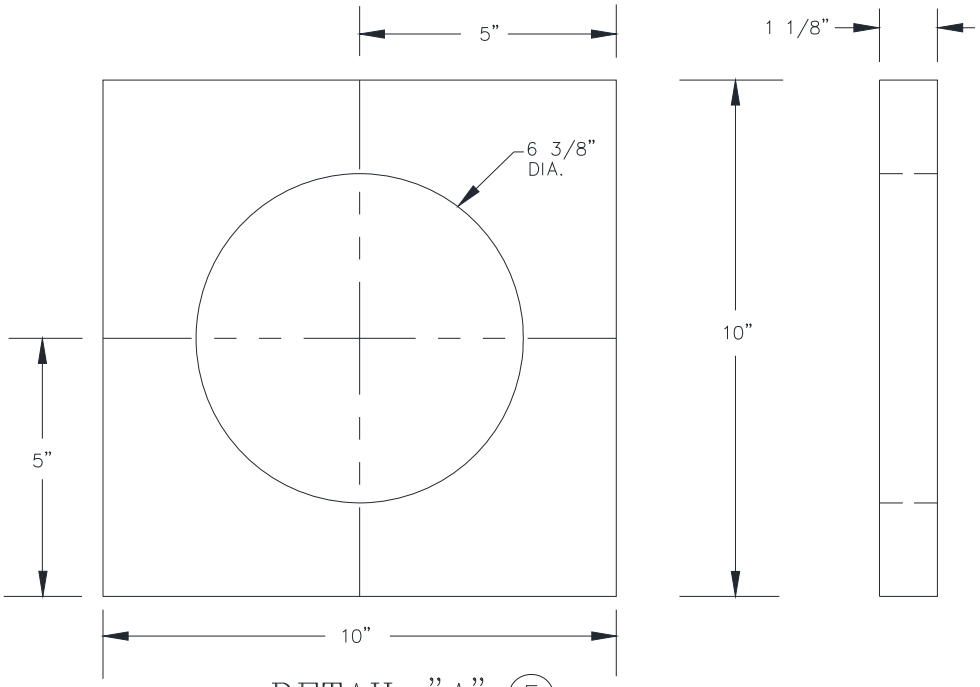

DETAIL "A" (5)

BOTTOM INSERT

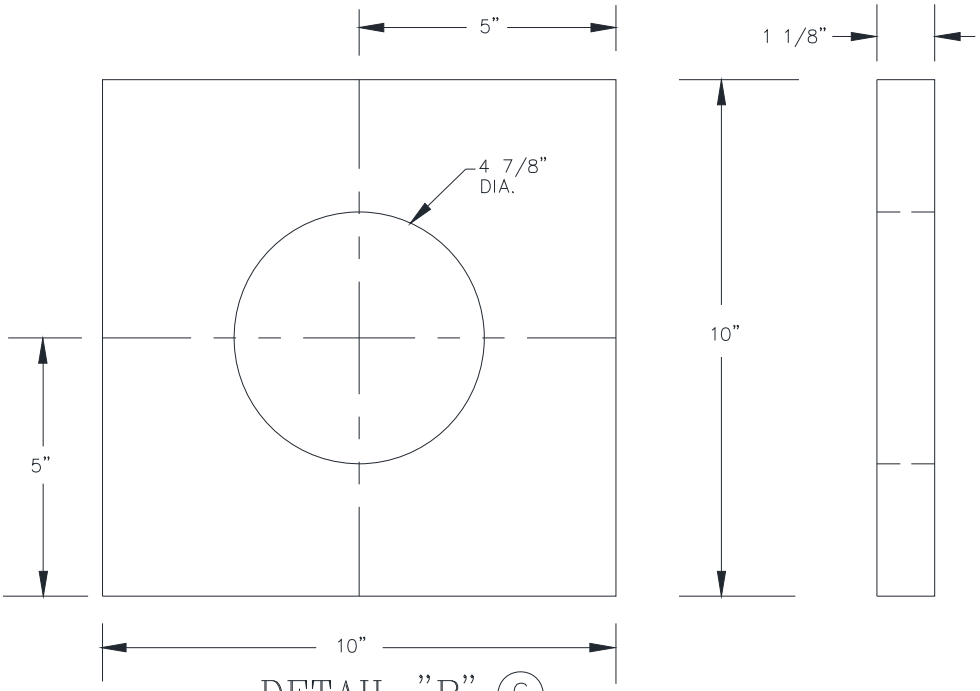

DETAIL "B" (6)

TOP INSERT

DD form MAR 87 2169 MOD

COMPUTER GENERATED