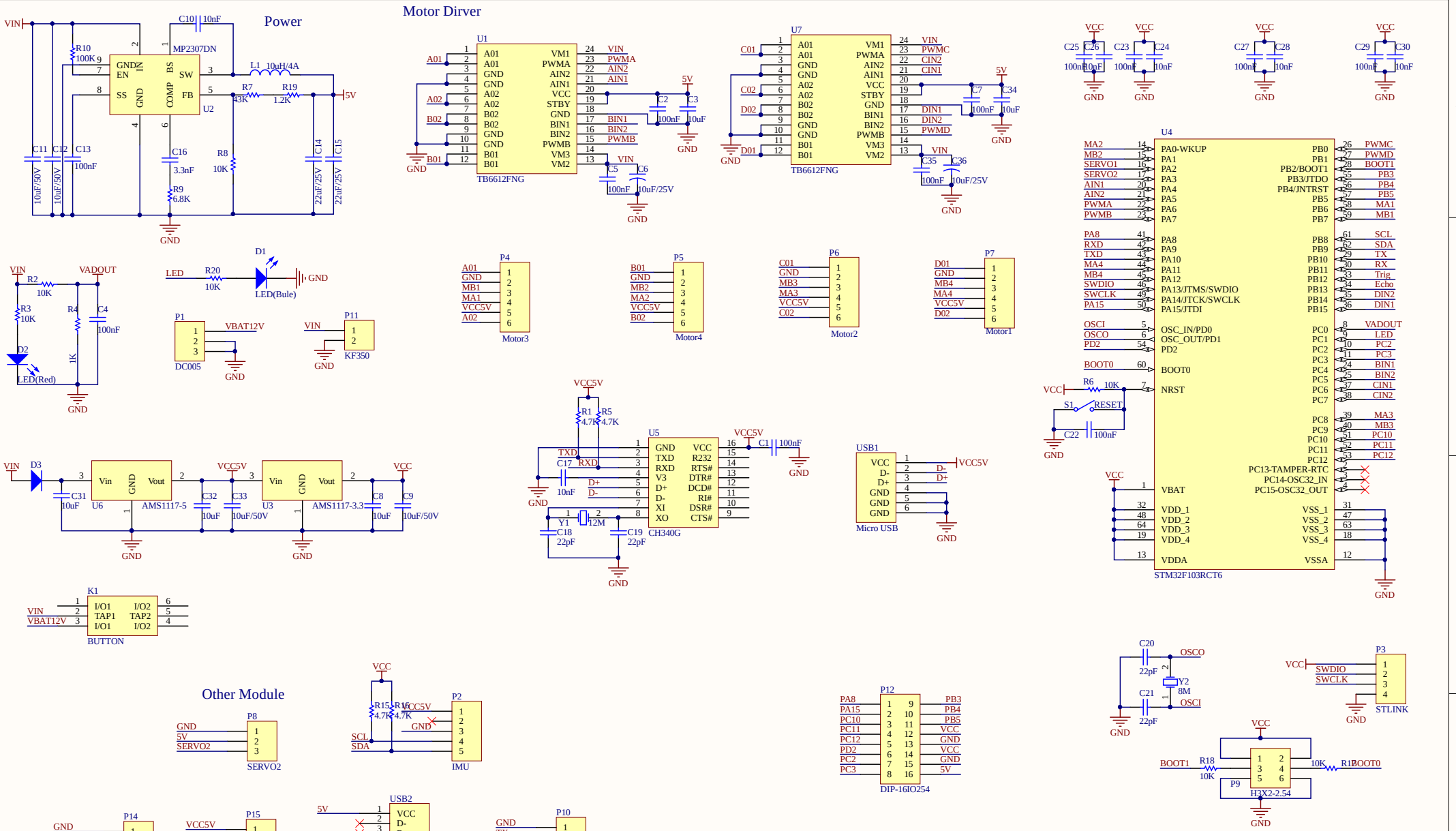
Power
Motor Dirver
Other Module
U1 TB6612FNG
U7 TB6612FNG
U4 STM32F103RCT6
U5 CH340G
U6 AMS1117-5
U3 AMS1117-3.3
MP2307DN
L1 10uH/4A
LED(Bule)
LED(Red)
DC005
KF350
Motor3
Motor4
Motor2
Motor1
Micro USB
BUTTON
SERVO2
IMU
SERVO1
Ultrasonic
USB
Serail3
DIP-16IO254
STLINK
H3X2-2.54
Title
Stm32_Robot_4WD_V1.0
Size
A4
Number
Revision
Date: 2017/7/17
Sheet of
File: E:\Work\..\RosCar.SchDoc
Drawn By: