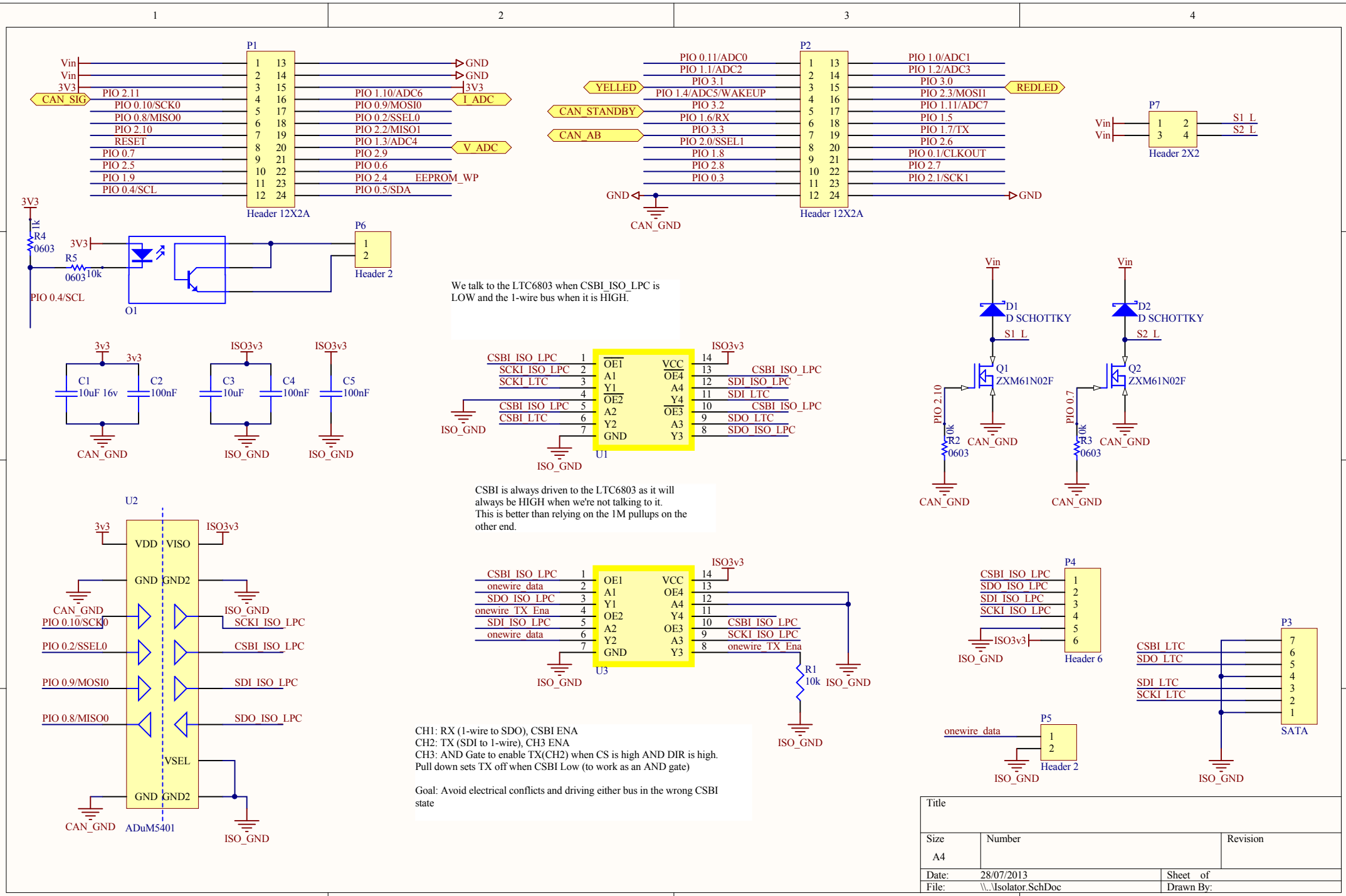
P1
Header 12X2A
Vin
Vin
3V3
CAN_SIG
PIO 2.11
PIO 0.10/SCK0
PIO 0.8/MISO0
PIO 2.10
RESET
PIO 0.7
PIO 2.5
PIO 1.9
PIO 0.4/SCL
PIO 1.10/ADC6
PIO 0.9/MOSI0
PIO 0.2/SSEL0
PIO 2.2/MISO1
PIO 1.3/ADC4
PIO 2.9
PIO 0.6
PIO 2.4
EEPROM_WP
PIO 0.5/SDA
GND
GND
3V3
I_ADC
V_ADC
P2
Header 12X2A
PIO 0.11/ADC0
PIO 1.1/ADC2
PIO 3.1
YELLED
PIO 1.4/ADC5/WAKEUP
PIO 3.2
CAN_STANDBY
PIO 1.6/RX
PIO 3.3
CAN_AB
PIO 2.0/SSEL1
PIO 1.8
PIO 2.8
PIO 0.3
GND
CAN_GND
PIO 1.0/ADC1
PIO 1.2/ADC3
PIO 3.0
REDLED
PIO 2.3/MOSI1
PIO 1.11/ADC7
PIO 1.5
PIO 1.7/TX
PIO 2.6
PIO 0.1/CLKOUT
PIO 2.7
PIO 2.1/SCK1
GND
P7
Header 2X2
Vin
Vin
S1_L
S2_L
3V3
R4
1k
0603
R5
10k
0603
3V3
PIO 0.4/SCL
O1
P6
Header 2
We talk to the LTC6803 when CSBI_ISO_LPC is LOW and the 1-wire bus when it is HIGH.
3v3
3v3
C1
10uF 16v
C2
100nF
CAN_GND
ISO3v3
C3
10uF
C4
100nF
ISO_GND
ISO3v3
C5
100nF
ISO_GND
CSBI_ISO_LPC
SCKI_ISO_LPC
SCKI_LTC
CSBI_ISO_LPC
CSBI_LTC
ISO_GND
OE1
A1
Y1
OE2
A2
Y2
GND
VCC
OE4
A4
Y4
OE3
A3
Y3
ISO3v3
CSBI_ISO_LPC
SDI_ISO_LPC
SDI_LTC
CSBI_ISO_LPC
SDO_LTC
SDO_ISO_LPC
ISO_GND
U1
Vin
D1
D SCHOTTKY
S1_L
Q1
ZXM61N02F
PIO 2.10
10k
R2
0603
CAN_GND
CAN_GND
Vin
D2
D SCHOTTKY
S2_L
Q2
ZXM61N02F
PIO 0.7
10k
R3
0603
CAN_GND
CAN_GND
CSBI is always driven to the LTC6803 as it will always be HIGH when we're not talking to it. This is better than relying on the 1M pullups on the other end.
U2
3v3
ISO3v3
VDD
VISO
GND
GND2
CAN_GND
ISO_GND
PIO 0.10/SCK0
SCKI_ISO_LPC
PIO 0.2/SSEL0
CSBI_ISO_LPC
PIO 0.9/MOSI0
SDI_ISO_LPC
PIO 0.8/MISO0
SDO_ISO_LPC
VSEL
GND
GND2
CAN_GND
ADuM5401
ISO_GND
CSBI_ISO_LPC
onewire_data
SDO_ISO_LPC
onewire_TX_Ena
SDI_ISO_LPC
onewire_data
ISO_GND
OE1
A1
Y1
OE2
A2
Y2
GND
VCC
OE4
A4
Y4
OE3
A3
Y3
ISO3v3
CSBI_ISO_LPC
SCKI_ISO_LPC
onewire_TX_Ena
U3
R1
10k
ISO_GND
ISO_GND
CH1: RX (1-wire to SDO), CSBI ENA
CH2: TX (SDI to 1-wire), CH3 ENA
CH3: AND Gate to enable TX(CH2) when CS is high AND DIR is high.
Pull down sets TX off when CSBI Low (to work as an AND gate)
Goal: Avoid electrical conflicts and driving either bus in the wrong CSBI state
P4
CSBI_ISO_LPC
SDO_ISO_LPC
SDI_ISO_LPC
SCKI_ISO_LPC
ISO3v3
ISO_GND
Header 6
P3
CSBI_LTC
SDO_LTC
SDI_LTC
SCKI_LTC
SATA
ISO_GND
P5
onewire_data
Header 2
ISO_GND
Title
Size
A4
Number
Revision
Date: 28/07/2013
Sheet of
File: \\..\Isolator.SchDoc
Drawn By:

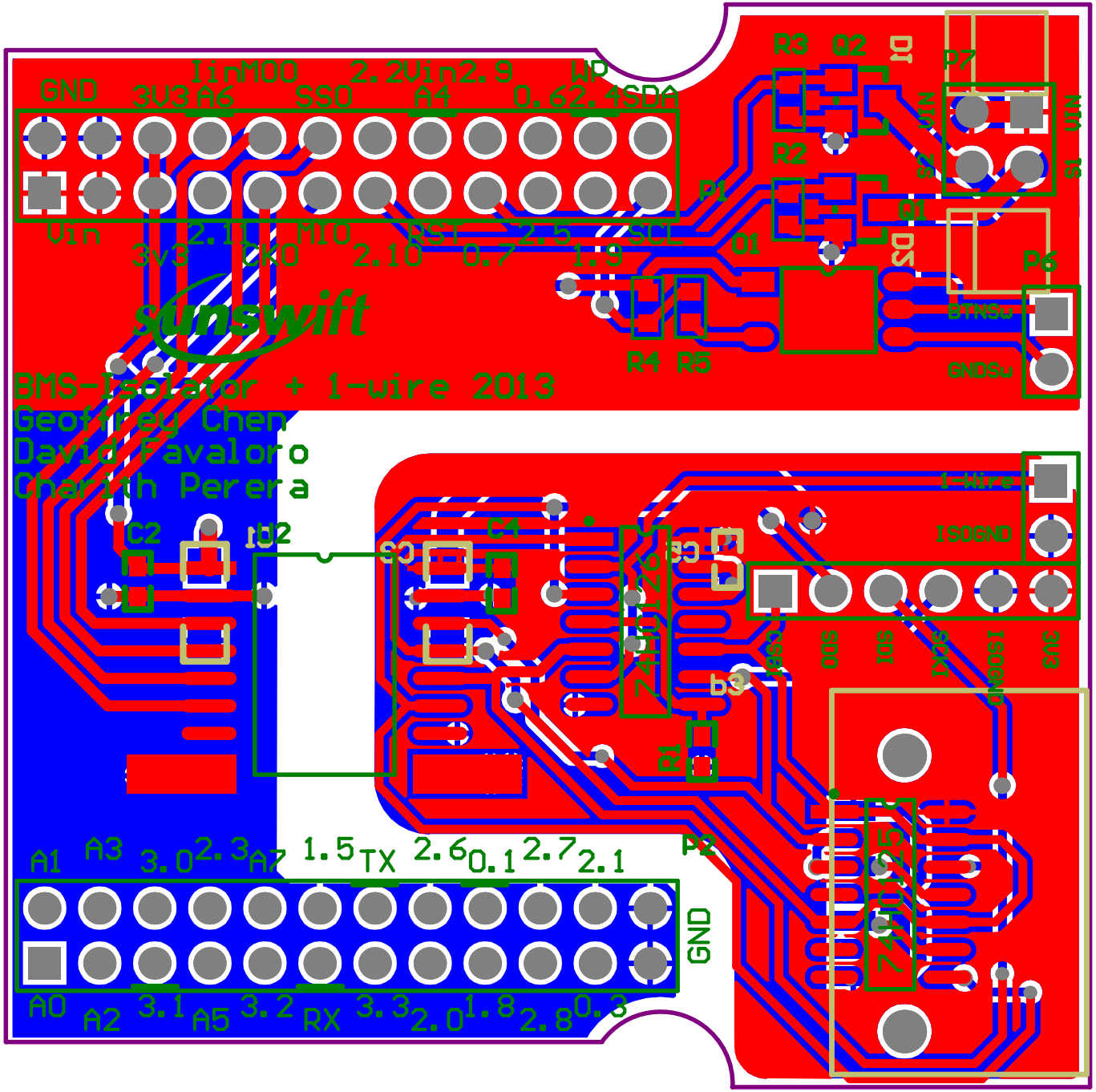
GND
3V3
A6
SS0
A4
0.6
2.4
SDA
Vin
3V3
CK0
2.10
0.7
1.9
SCL
R3
Q2
D2
P7
R2
Q1
D1
P6
BTNSw
GNDSw
R4
R5
BMS-Isolator + 1-wire 2013
Geoffrey Chen
David Favaloro
Chatith Perera
C2
U2
C4
C5
C6
1-Wire
ISOGND
OGS
IGS
IVCS
ONGGT
SNG
R1
P2
A1
A3
3.0
2.3
A7
1.5
TX
2.6
0.1
2.7
2.1
GND
A0
A2
3.1
A5
3.2
RX
3.3
2.0
1.8
2.8
0.3