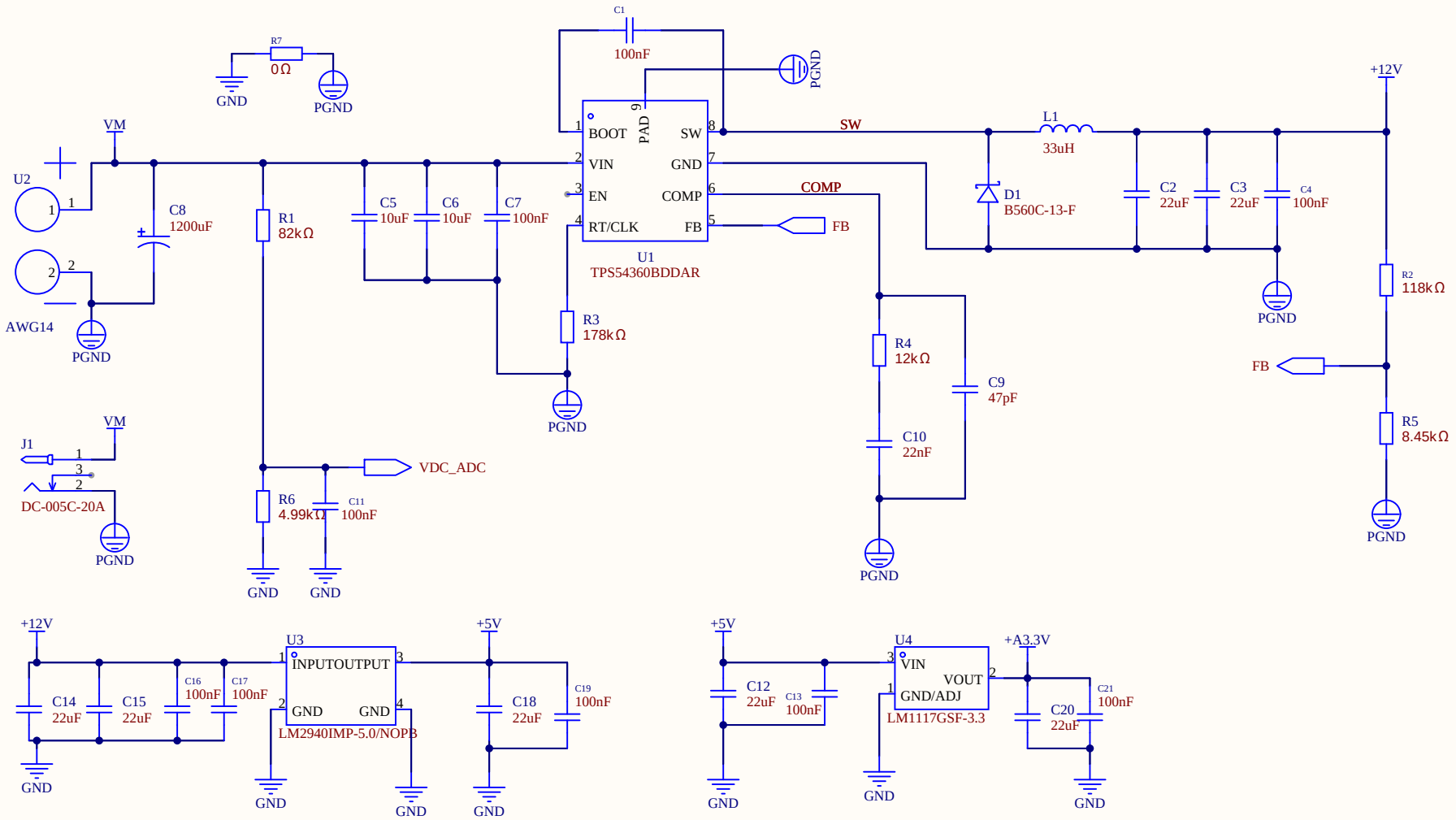

Schematic	Schematic2_5	Create at	2026-01-28
		Update at	2026-01-28
Board	Final_v3	Page	Power
Drawn		EBike	
Reviewed			
		Version	Size	Page 1 Total 3
EasyEDA		V1.0	A4	EasyEDA.com

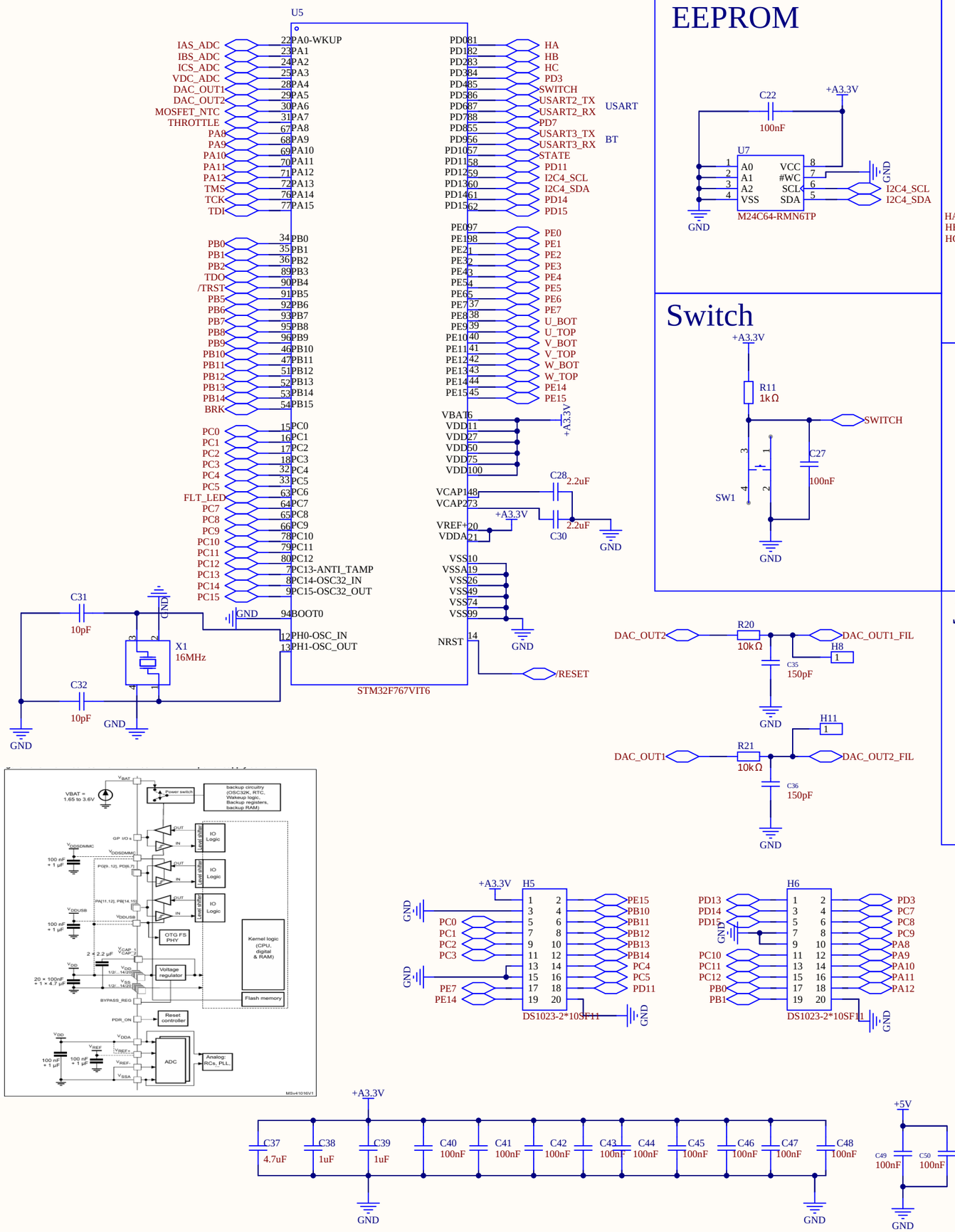

EEPROM

Switch

Hall Sensor

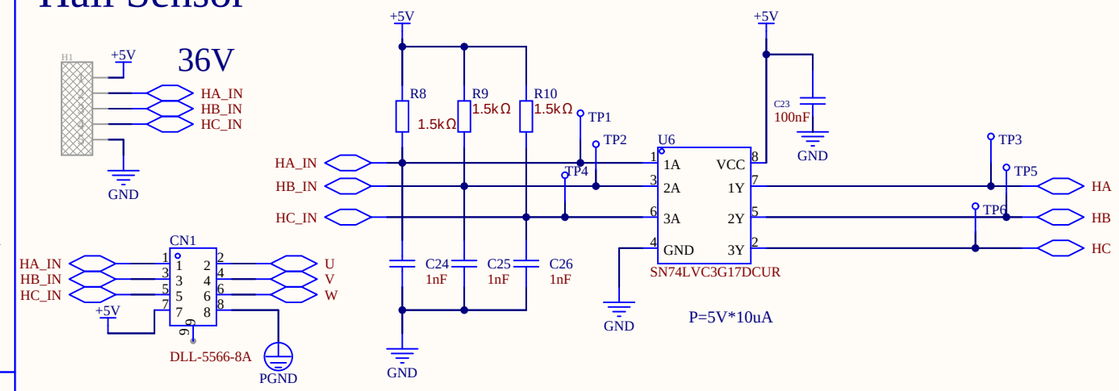

Throttle

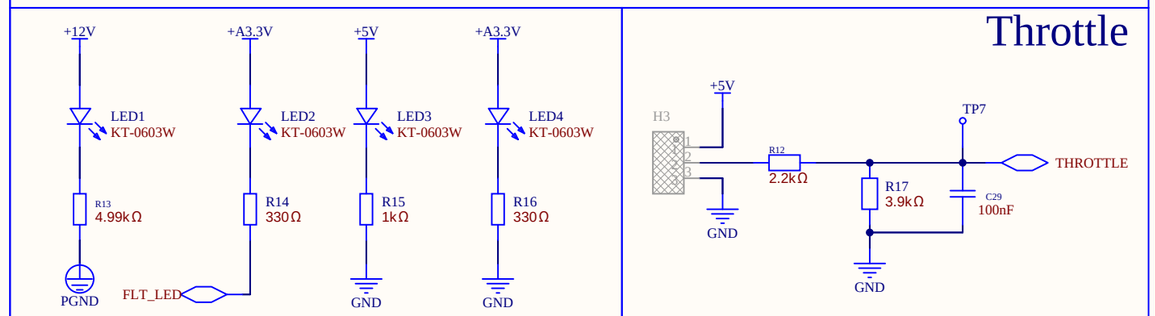

JTAG

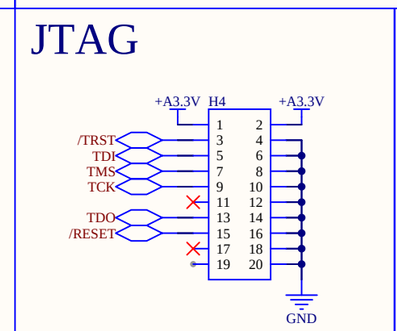

NTC

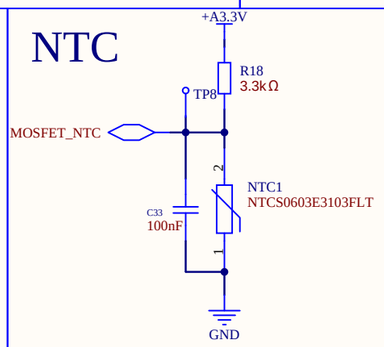

Reset

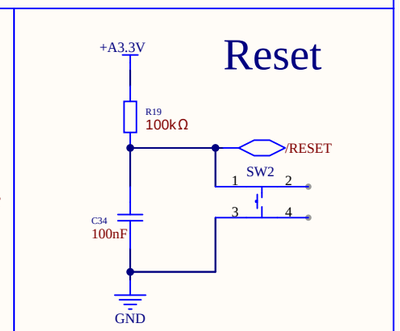

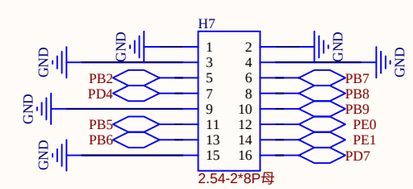

BT & UART

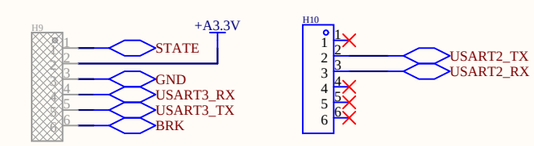

Schematic	Schematic2_5	Create at	2026-01-28
		Update at	2026-01-28
Board	Final_v3	Page	MCU
Drawn	EBike		
Reviewed			
		Version	Size	Page 2 Total 3
EasyEDA		V1.0	A4	EasyEDA.com

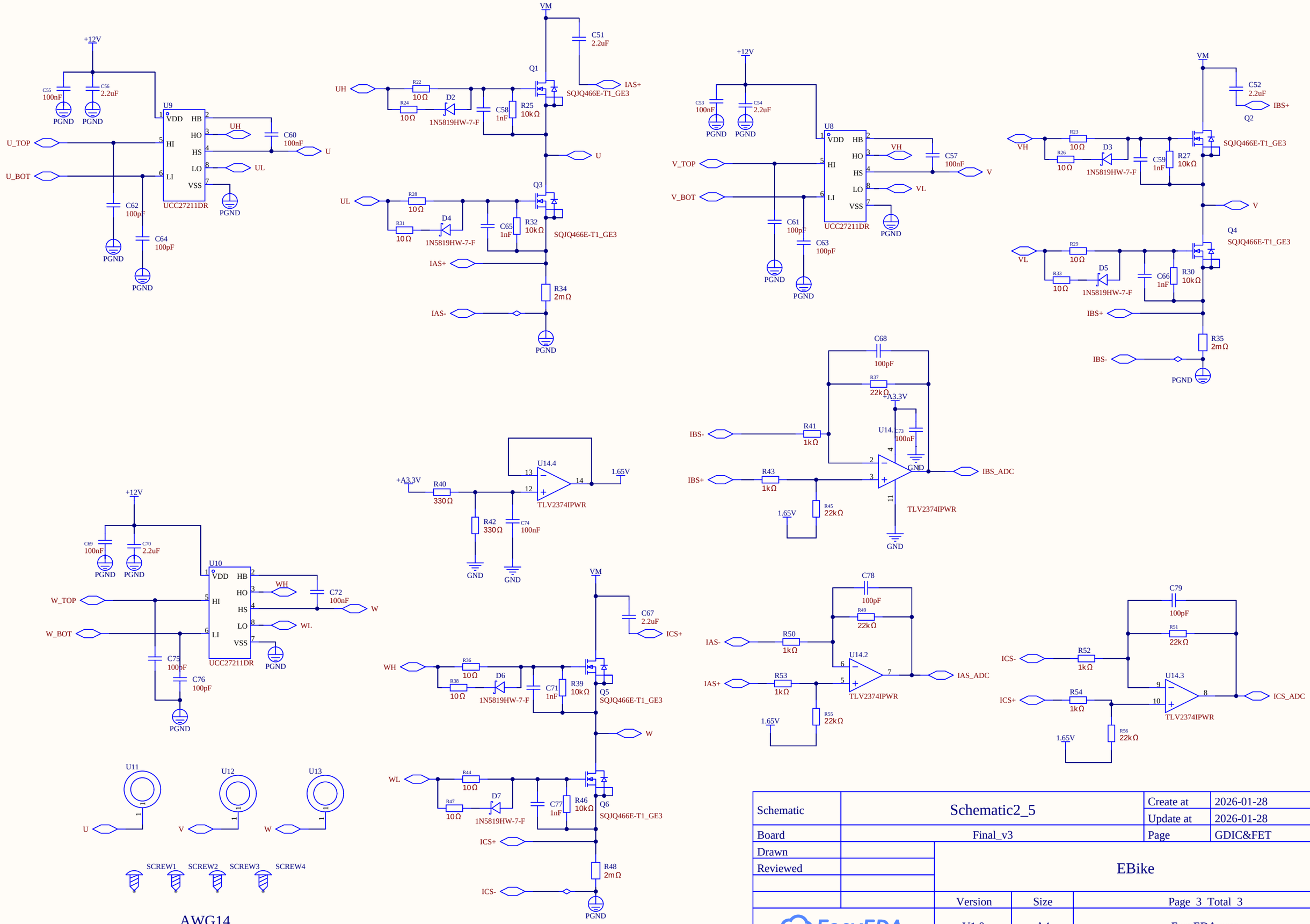

Schematic	Schematic2_5	Create at	2026-01-28
		Update at	2026-01-28
Board	Final_v3	Page	GDIC&FET
Drawn		EBike	
Reviewed			
		Version	Size	Page 3 Total 3
EasyEDA		V1.0	A4	EasyEDA.com