8304653

PERMISSIBLE VARIATION ON COMMON FRACTION DIMENSIONS TO MACHINED SURFACES TO BE ±.010 UNLESS OTHERWISE SPECIFIED. FABRICATION TOLERANCE. $\pm\frac{1}{32}$

BREAK ALL SHARP CORNERS UNLESS OTHERWISE SPECIFIED.

COUNTERSINK ALL TAPPED HOLES 118° X ONE THR'D DEEP.

SURFACE FINISH SPECS. IS IN ACCORDANCE WITH G.M. ENGR STDS.

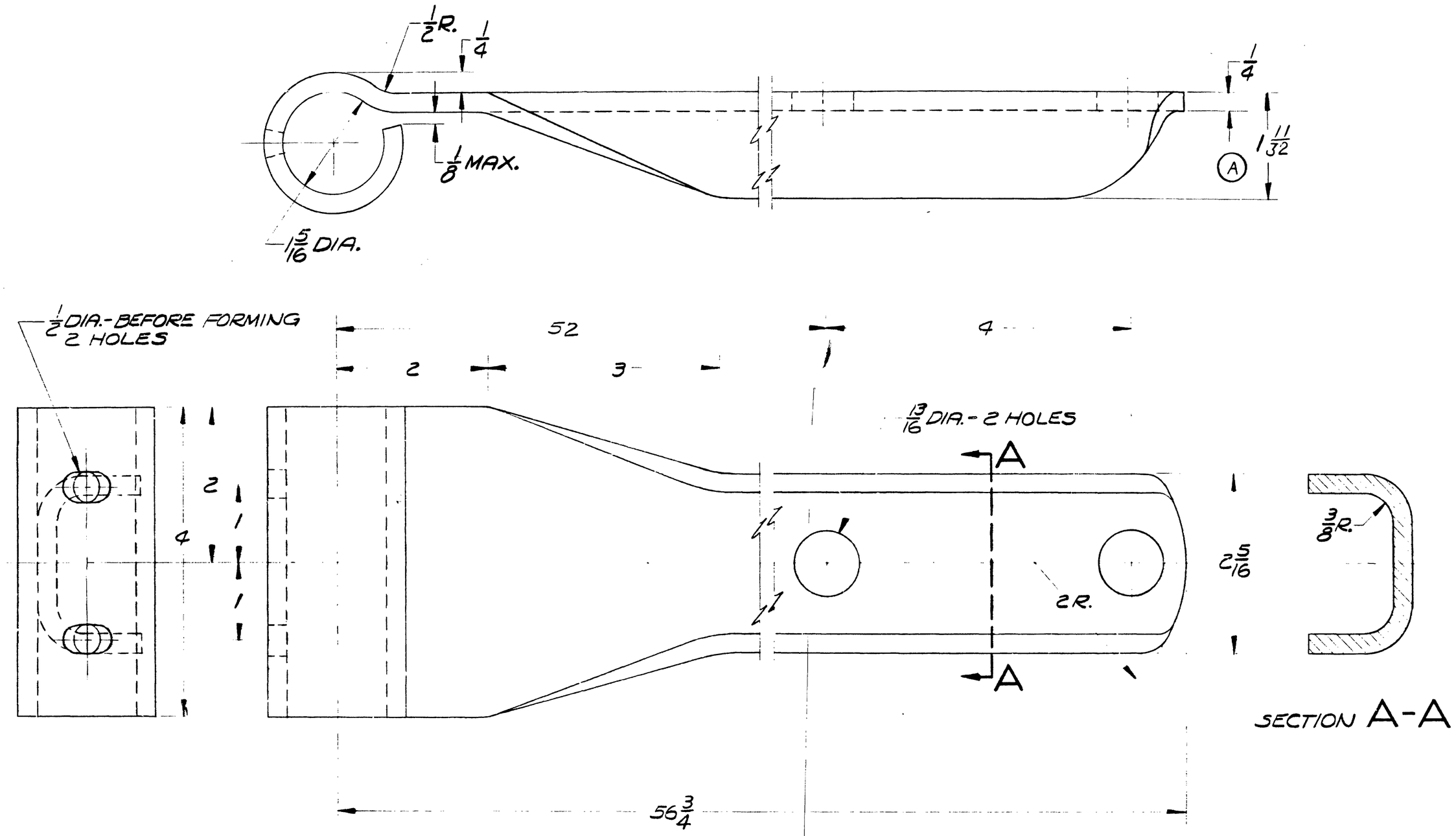

P.F.C. NO.	REV. LET.	REVISION	DATE	BY	CK.	APV'D.

R.F.C. NO.	REV. LET.	REVISION	DATE	BY	CK.	APV'D.

R.F.C. NO.	REV. LET.	REVISION	DATE	BY	CK.	APV'D.
00099	A	WAS 1 29/64	11-5-71	AJ		

FIRST USED ON GP 22

NO. REQUIRED PER ASSEMBLY

MATERIAL: MS 4361 STEEL

DR.	J. Benjamin	DATE 2-7-61
CK.	J. A. Clark	3-13-61
CH. CK.		SUP. 3-13-61
WELD.		CH. DR. KMG 3-14-61
MAT'L.		ENGR. 3-14-61

NAME OF PART | PART NO. | IT. NO.

ELECTRO-MOTIVE DIVISION
GENERAL MOTORS CORPORATION
LA GRANGE, ILLINOIS, U.S.A.

SUPPORT-HANDRAIL

DATE OF PRINT

PART NO. **8304653**

Form EMD 418-E 2000 2-60

GLENNON & KERN, INC., CHICAGO