8407125

TOLERANCES ON ALL DIMENSIONS NOT SPECIFIED ON THE DRAWING TO BE IN ACCORDANCE WITH A1-2100

BREAK ALL SHARP CORNERS UNLESS OTHERWISE SPECIFIED

COUNTERSINK ALL TAPPED HOLES 118° X ONE THRD DEEP

SURFACE FINISH SPECS IS IN ACCORDANCE WITH G M ENGR STDS

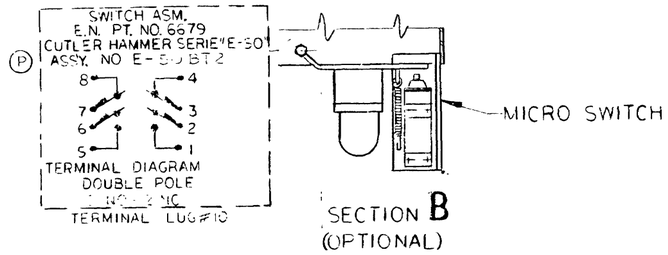

		TABULATION OF BRAKES FURNISHED TO ELECTRO-MOTIVE DIVISION										
RFC	REVISION	F.M.D. PART NO.	E-N MODEL NO.	LGTH. OF CHAIN BELOW H.W. ℄	CHAIN OVER-ALL LENGTH	HAND WHEEL DIA.	HAND WHEEL CLEARANCE	HAND WHEEL SHAFT PART NO.	OVER-ALL BRAKE DEPTH	MOUNTING BOLT NO.	SHIPPING NUT NO.	STYLE MOUNTING
	G	8382308	210 5/W	7'6"	7'10"	20"	6"	3437-A	10 3/4"	3442-1	NONE	III
	C	8384732	210 5/W	10'8"	11'0"	22"	4 1/2"	926-A	9 5/8"	3442-1	3441	II
	E	8388715	210 5/W	8'5"	8'9"	20"	4 7/8"	926-A	9 5/8"	3442-3	NONE	III
	F	8399484	210 5/W	7'6"	7'10"	16"	6"	3437-A	10 3/4"	3442-1	3441	III
	D	8401081	210 5/W	10'8"	11'0"	18"	4 1/2"	926-A	9 5/8"	3442-1	3441	II
	P	8401103	210 5/W	9'0"	9'4"	20"	4 7/8"	926-A	9 5/8"	3442-1	NONE	III
	R	8408877	210 5/W	8'8"	9'0"	20"	4 7/8"	926-A	9 5/8"	3442-1	3441	I
	B	8440920	210 5/W	8'5"	8'9"	16"	4 7/8"	926-A	9 5/8"	3442-3	NONE	III
	C	8485001	210-5	16'2"	16'6"	20	4 1/4	926-F	8 5/8	3442-1	NONE	III
	E	8494671	210-5	10'5"	10'9"	20	4 1/4	926-F	8 5/8	3442-1	NONE	III
	D	8494678	210-5	11'11"	12'3"	20	4 1/4	926-F	8 5/8	3442-1	NONE	III
	A	9099429	210-5	11'6"	11'10"	20	4 1/4	926-F	8 5/8	3442-1	NONE	III
	A	9333150	210-5	12'4"	12'8"	20	4 1/4	926-F	8 5/8	3442-1	NONE	III
815311	B	9537250 *	210-5	11 FT. 6 IN.	11 FT 11 IN.	20 IN.	4-1/4	926-F	8-5/8	3442-1	NONE	III

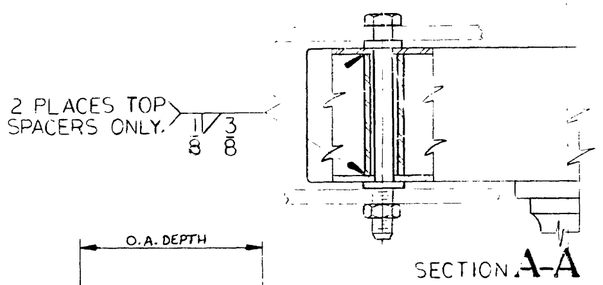

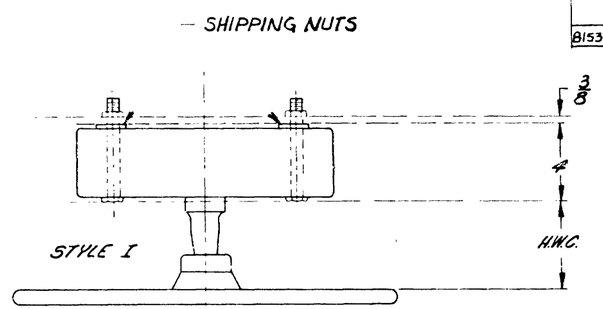

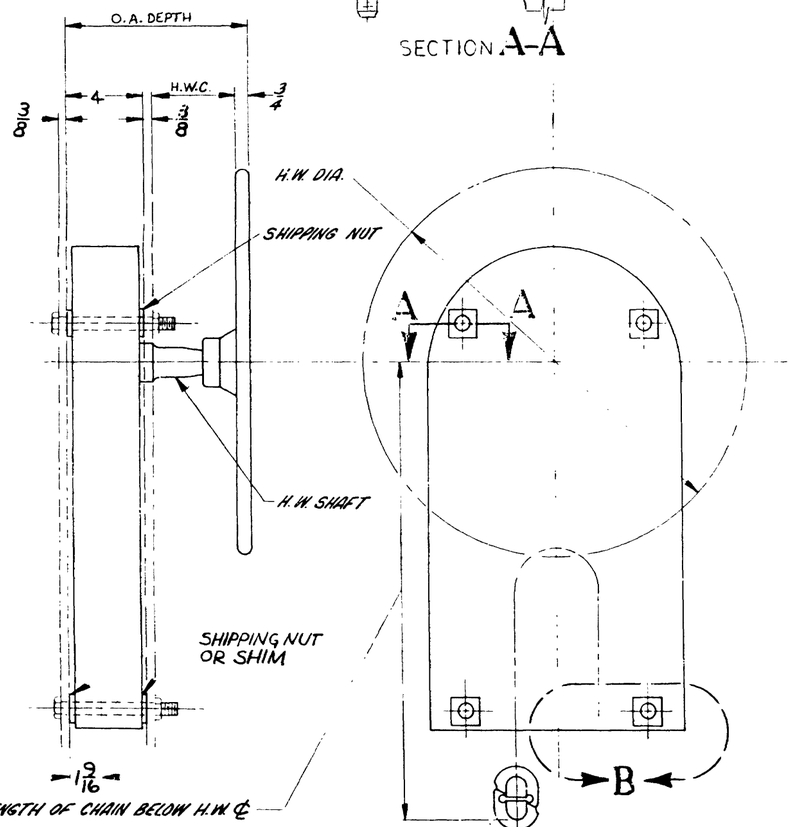

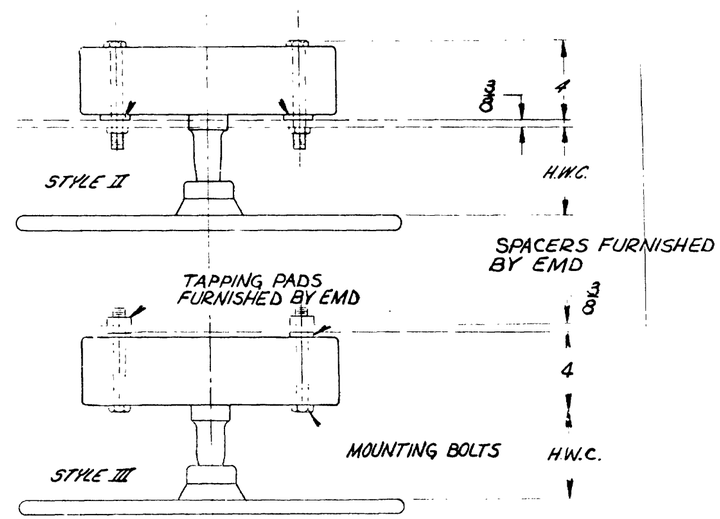

MOUNTING STYLES

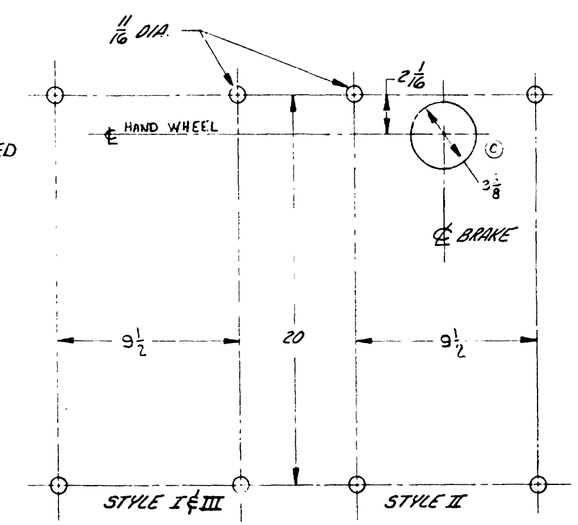

DRILLING DIAGRAM

NOTE:
FOR ASSEMBLY AND PARTS LIST OF THESE BRAKES SEE E-N DWG'S D-1613 & DX-1613

(L2)(P1)
* INCLUDE SIGNAL SWITCH FOR DETAIL SEE SECTION B.

ELLCON-NATIONAL, INC.
MODEL 210 N5
DWG. NO. D-3747

EMD SERV. PARTS LIST AVAILABLE

R.F.C. NO.	REV LET	REVISION	DATE	BY	CK	APV'D

R.F.C. NO.	REV LET	REVISION	DATE	BY	CK	APV'D

R.F.C. NO.	REV LET	REVISION	DATE	BY	CK	APV'D
	P1	WAS "MICRO SWITCH"				
812546	P	C-H NO. WAS E-50-BN-2	09DC81	WD		
815311	N	9537250-EN #WAS 210N5	29DC81	FS		NEK
812552	M	9537250 MADE "ND"	25MAR74	RH		

R.F.C. NO.	REV LET	REVISION	DATE	BY	CK	APV'D
	L2	NOTE ADDED	11	MR		
	L1	SECTION B ADDED	81	J.P.		
A15855	L	9537250 ADDED				
A10445	K	SECT A-A ADDED	07NOV80	J.P.		
82722	J	9333150 ADDED	3-25-77	LFB		
74101	H	9099429 ADDED	7-22-75	LFB		
56286	G	8485001 REV'D PER DET.	2-1-74	LFB		
60576	F	8494678 ADDED	11-16-73	ZEL		

R.F.C. NO.	REV LET	REVISION	DATE	BY	CK	APV'D
61952	E	8494671 ADDED	10-8-73	SMB	LFB	
46049	D	8485001 ADDED	7-23-73	LFB		
34197	C	DIM WAS 3 1/3	10-22-70			
	B1	8399484 WAS STYLE I	12-15-69			
23068	B	ADD 8440920				
26245	A	8382308 WAS STYLE I	8-15-69	GES		

FIRST USED ON

NO. REQUIRED PER ASSEMBLY

MATERIAL

DR. DATE 1-15-68

CK. 5-19-68

CH. DR.

SUP. S.

WELD.

MOD. ENGR.

ENGR. 5-19-68

MAT'L.

NAME OF PART

PART NO.

IT. NO

ELECTRO-MOTIVE DIVISION
GENERAL MOTORS CORPORATION
LA GRANGE, ILLINOIS, U.S.A.

HAND BRAKE ASSEMBLY-MASTER DRAWING

DATE OF PRINT

PART NO. 8407125

© ELLCON & KARL, INC., CHICAGO