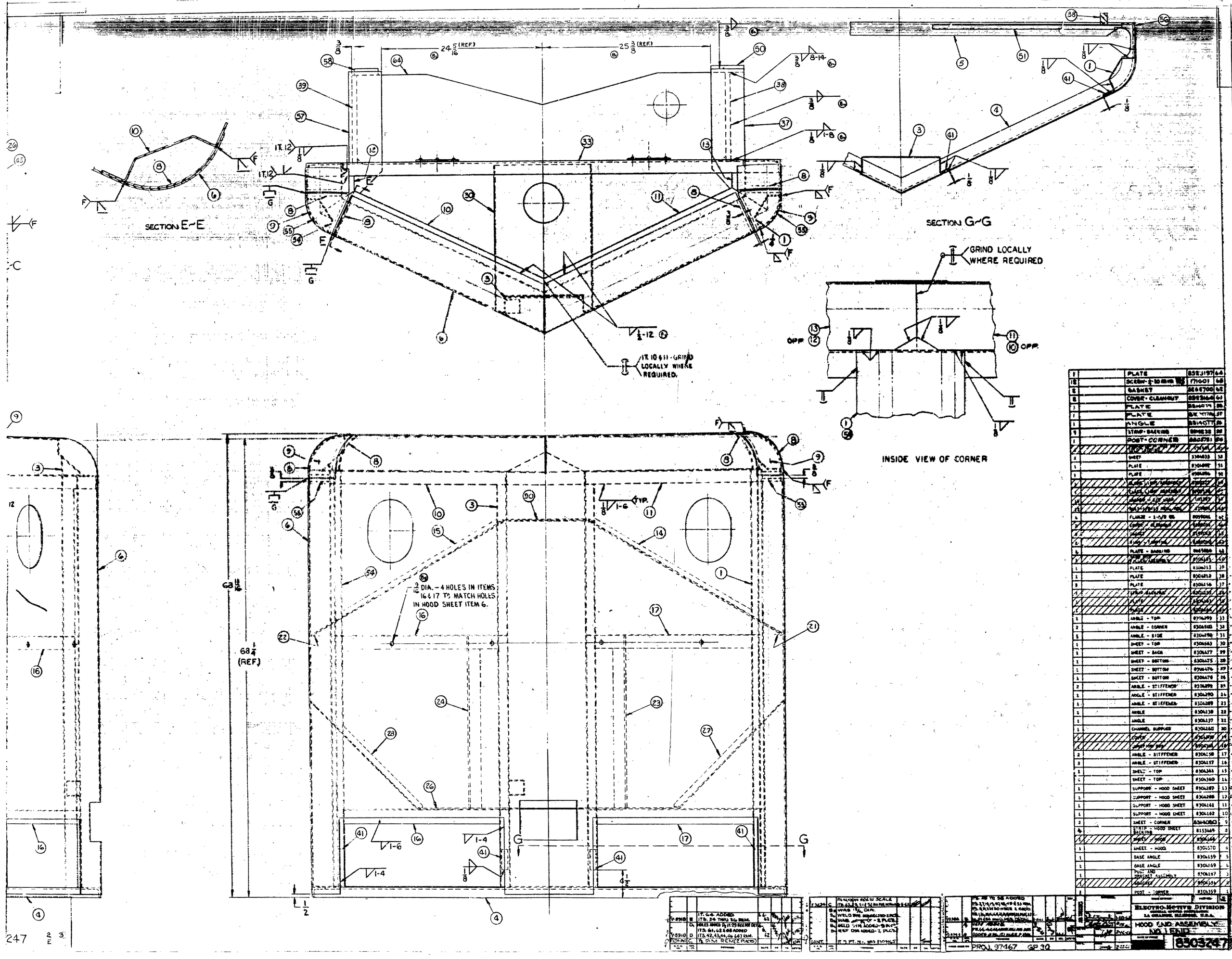

1		PLATE	8321197	64
12		SCREW - 1/2 - 20 NF	171001	63
2		GASKET	8363700	62
8		COVER - CLEANOUT	8321364	61
1		PLATE	8304179	60
1		PLATE	8304177	59
1		ANGLE	8304177	58
9		STAMP - BARRING	8318238	57
1		POST - CORNER	8303781	56
		[illegible]	[illegible]	[illegible]
2		SHEET	8304633	55
1		PLATE	8304697	54
1		PLATE	[illegible]	53
		[illegible]	[illegible]	[illegible]
		[illegible]	[illegible]	[illegible]
		[illegible]	[illegible]	[illegible]
		[illegible]	[illegible]	[illegible]
4		FLANGE - 1-1/2 SQ.	8059004	48
		[illegible]	[illegible]	[illegible]
		[illegible]	[illegible]	[illegible]
2		[illegible]	[illegible]	[illegible]
1		PLATE - BARRING	8065880	44
		[illegible]	[illegible]	[illegible]
1		PLATE	8304313	39
1		PLATE	8304312	38
8		PLATE	8304314	37
		[illegible]	[illegible]	[illegible]
		[illegible]	[illegible]	[illegible]
		[illegible]	[illegible]	[illegible]
1		ANGLE - TOP	8304299	33
2		ANGLE - CORNER	8304302	32
8		ANGLE - SIDE	8304298	31
1		SHEET - TOP	8304563	30
1		SHEET - BACK	8304477	29
1		SHEET - BOTTOM	8304475	28
1		SHEET - BOTTOM	8304474	27
1		SHEET - BOTTOM	8304476	26
2		ANGLE - STIFFENER	8304292	25
1		ANGLE - STIFFENER	8304290	24
1		ANGLE - STIFFENER	8304289	23
1		ANGLE	8304138	22
1		ANGLE	8304137	21
1		CHANNEL SUPPORT	8304140	20
		COVER	[illegible]	[illegible]
		[illegible]	[illegible]	[illegible]
2		ANGLE - STIFFENER	8304158	17
2		ANGLE - STIFFENER	8304157	16
1		SHEET - TOP	8304361	15
1		SHEET - TOP	8304360	14
1		SUPPORT - HOOD SHEET	8304287	13
1		SUPPORT - HOOD SHEET	8304288	12
1		SUPPORT - HOOD SHEET	8304161	11
1		SUPPORT - HOOD SHEET	8304162	10
2		SHEET - CORNER	8304080	9
4		STRIP - HOOD SHEET BACKING	8153669	8
		SHEET - HOOD	8304669	7
1		SHEET - HOOD	8304570	6
1		BASE ANGLE	8304159	5
1		BASE ANGLE	8304169	4
1		POST AND BRACKET ASSEMBLY	8304197	3
		[illegible]	[illegible]	[illegible]
1		POST - CORNER	8303359	1

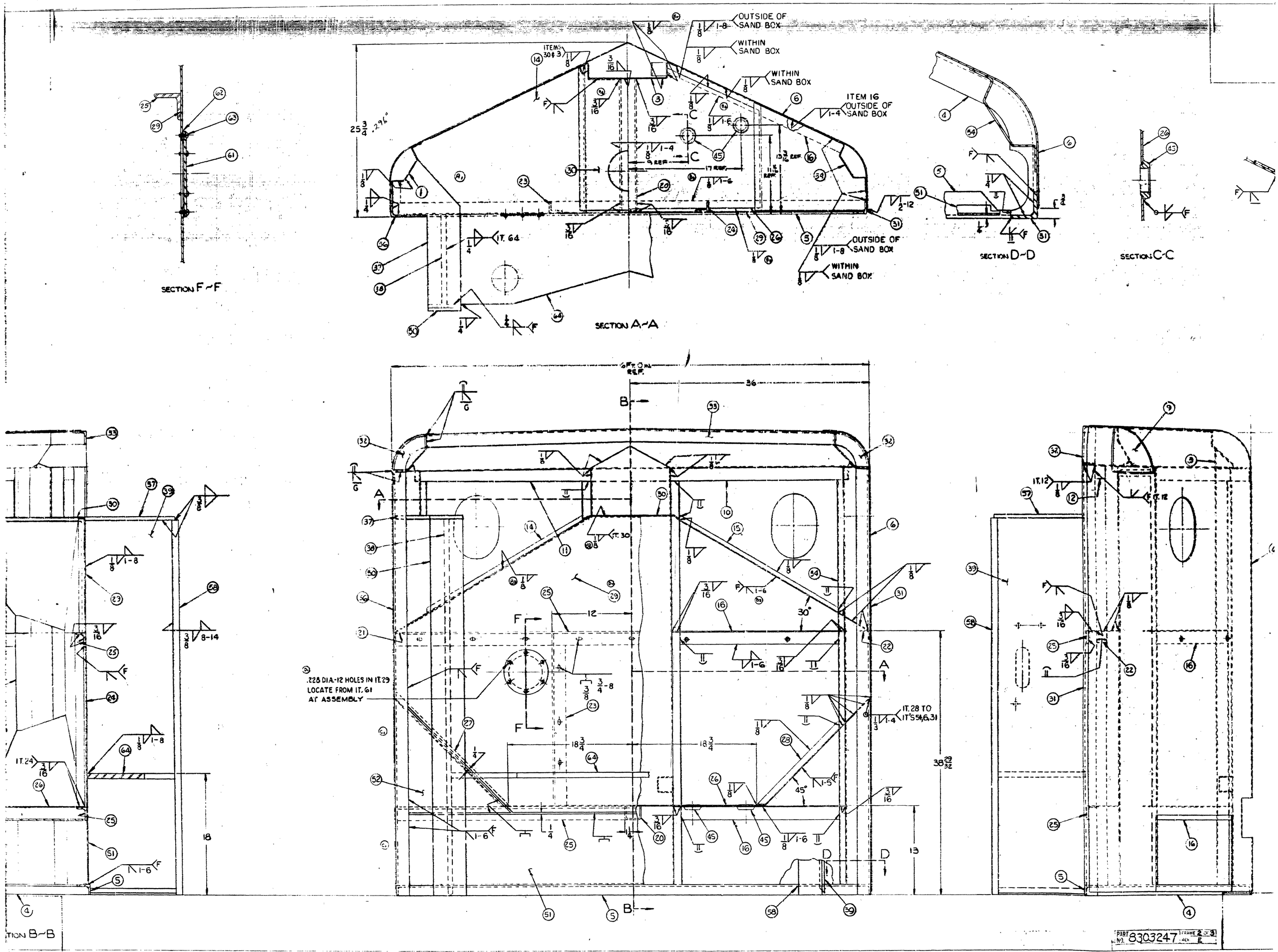
SECTION F-F
SECTION A-A
SECTION D-D
SECTION C-C
SECTION B-B
OUTSIDE OF SAND BOX
WITHIN SAND BOX
ITEM 16 OUTSIDE OF SAND BOX
ITEMS 30 & 3
IT. 64
IT. 30
IT. 12
IT. 24
.228 DIA.-12 HOLES IN IT. 29 LOCATE FROM IT. 61 AT ASSEMBLY
IT. 28 TO IT'S 5,4,6,31
36
12
30°
45°
18
13
PART No. 8303247
FRAME 2 OF 3
REV. E

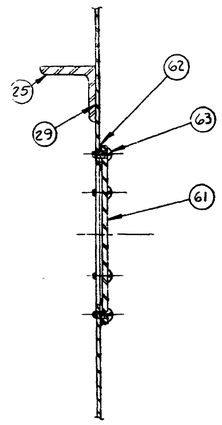

SECTION F~F

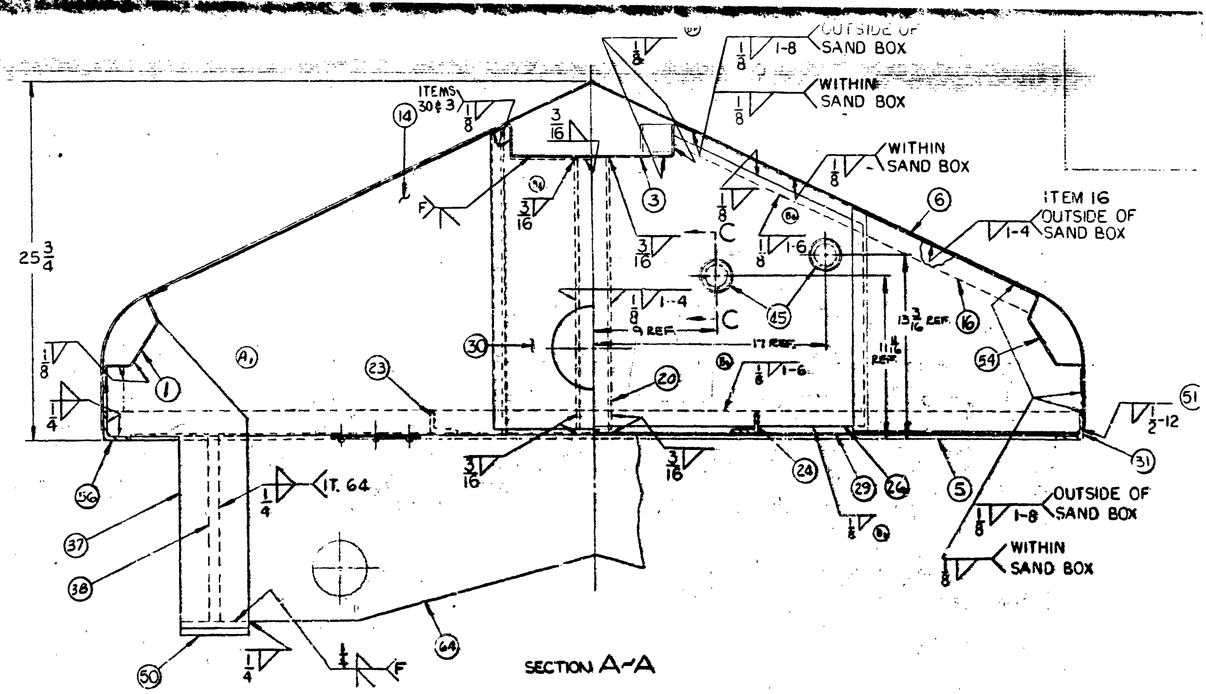

SECTION A~A

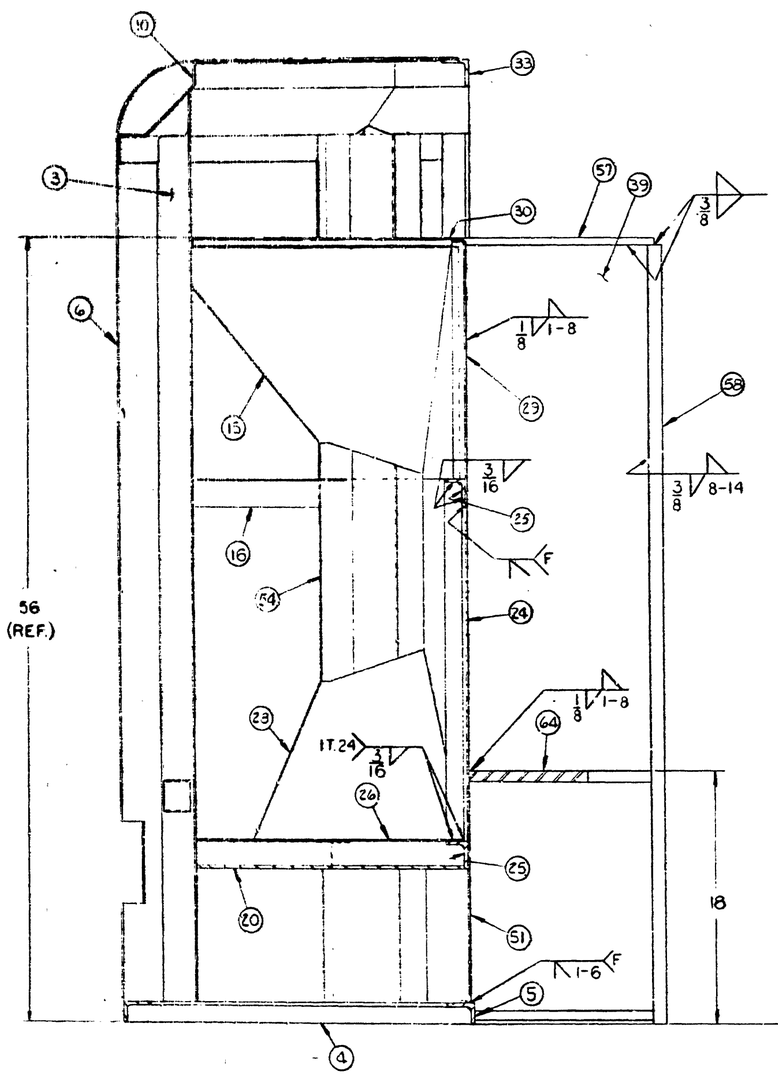

SECTION B~B

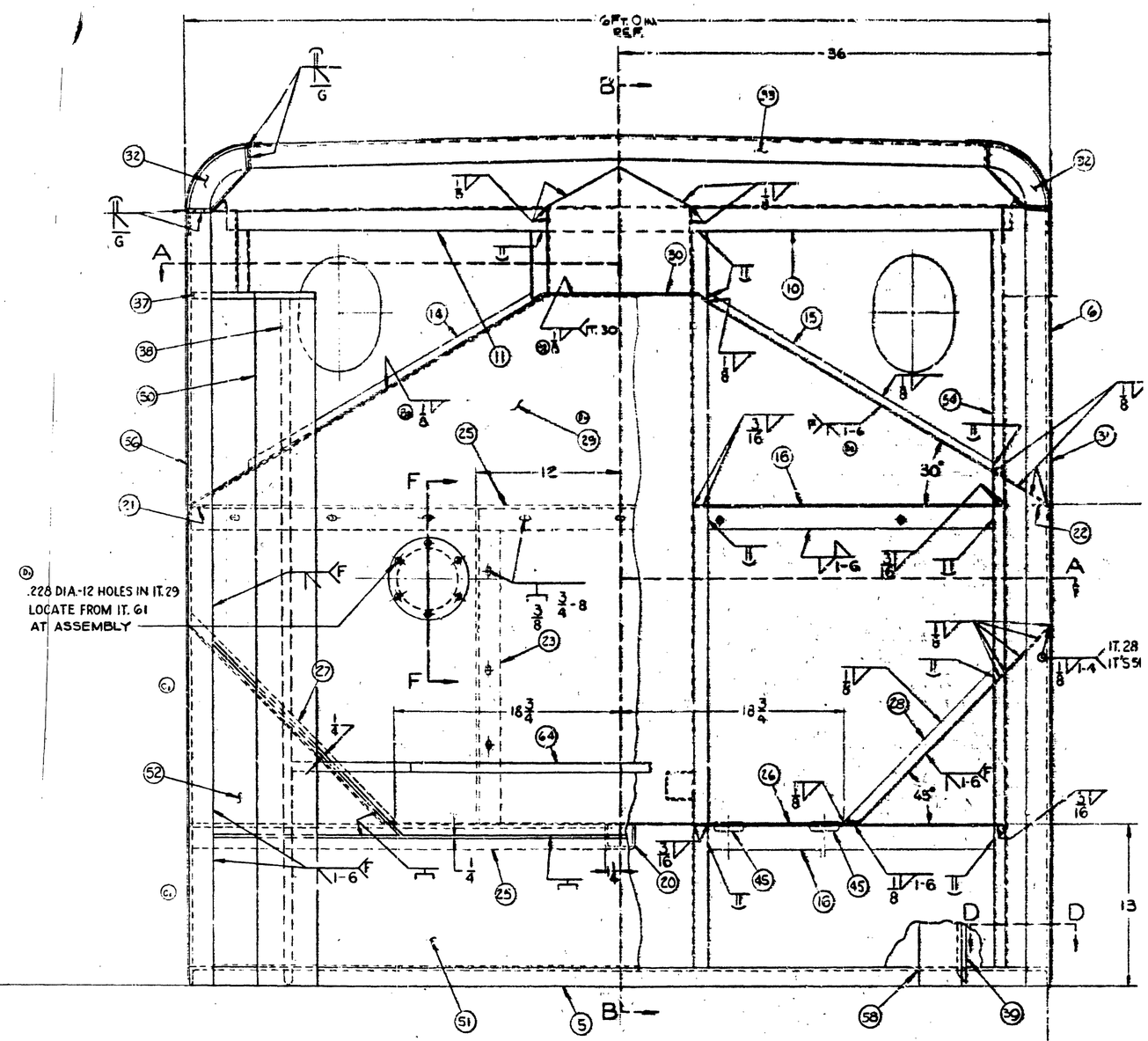

BREAK ALL SHARP CORNERS UNLESS OTHERWISE SPECIFIED.

COUNTERSINK ALL TAPPED HOLES 118° X ONE THIRD DEEP.

SURFACE FINISH SPECS. ARE IN ACCORDANCE WITH G.M. ENGR. STDS.

PERMISSIBLE VARIATION ON COMMON FRACTION DIMENSIONS TO MACHINED SURFACES TO BE ± 0.10 UNLESS OTHERWISE SPECIFIED.

FABRICATION TOLERANCE: $\pm \frac{1}{32}$

CASTING TOLERANCE:

FORGING TOLERANCE: