8330408

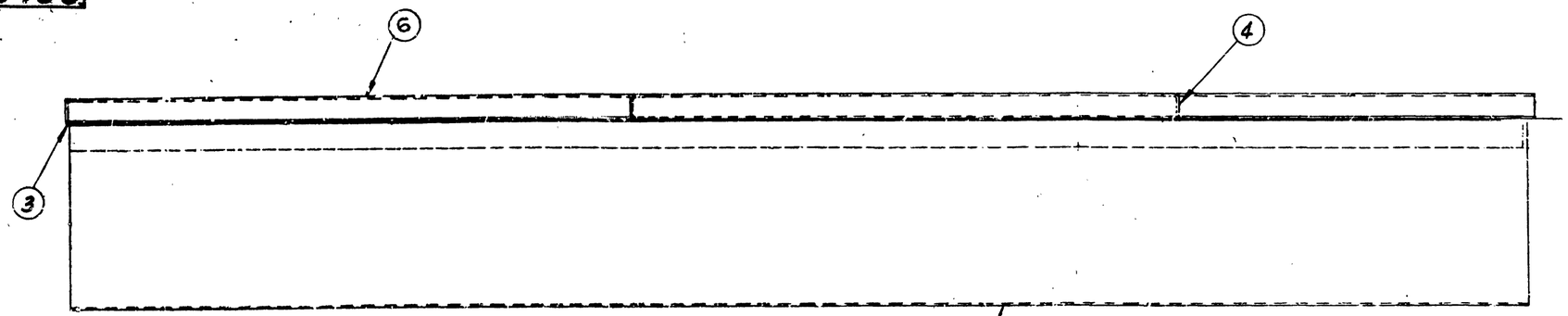

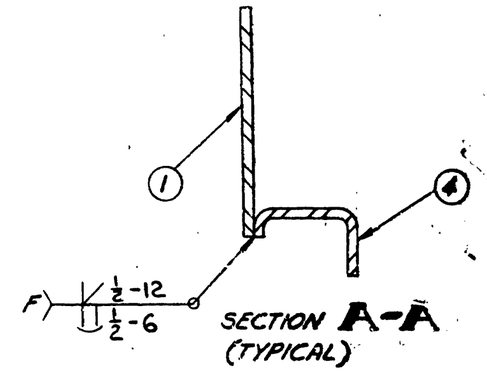

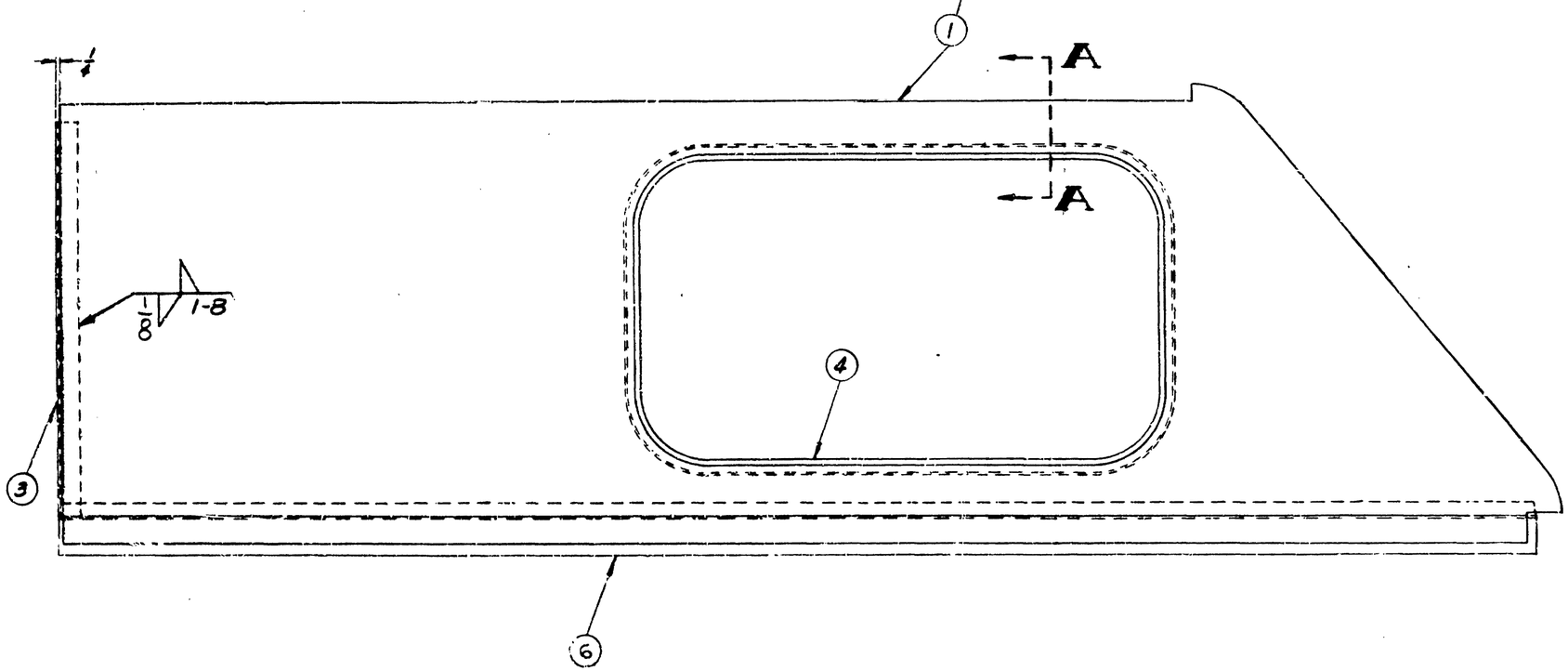

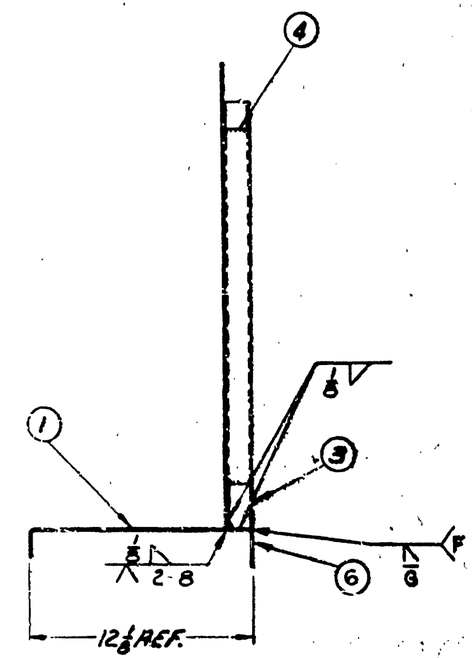

A6625	D	IT. 5 REV'D. IT. 6 ADDED. IT. 3 REL PER DETAIL.	3-12-64	J.S.		
Z-5406	C	IT. 3 REVISED PER DETAIL. IT. 2 REV'D.-IT. 5 ADDED	12-30-63			
Z-1596	B	IT. 2 REV'D PER DET.	6-7-63			
Z-5754	A	IT. 3 RELOCATED & REV'D	3-5-63			
O.P.C. NO.	REV. LET.	REVISION	DATE	BY	CK.	APP'D.

FIRST USED ON GLP-55

1		ZEE	8342950 6
1			
1			
1			
1			
		ELECTRO	