8447382

TOLERANCES ON ALL DIMENSIONS NOT SPECIFIED ON THE DRAWING TO BE IN ACCORDANCE WITH A.I.-5100.

BREAK ALL SHARP CORNERS UNLESS OTHERWISE SPECIFIED.

COUNTERSINK ALL TAPPED HOLES 118° X ONE THR'D DEEP.

SURFACE FINISH SPECS. IS IN ACCORDANCE WITH G.M. ENGR. STDS.

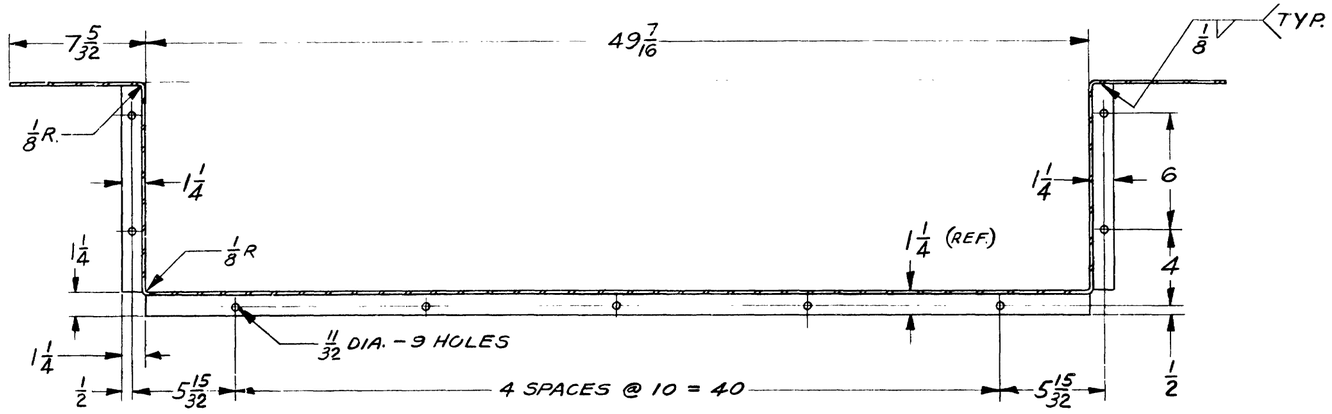

SECTION B-B

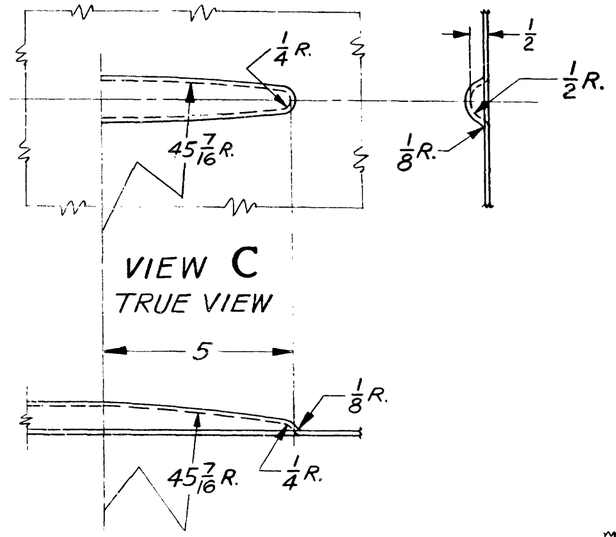

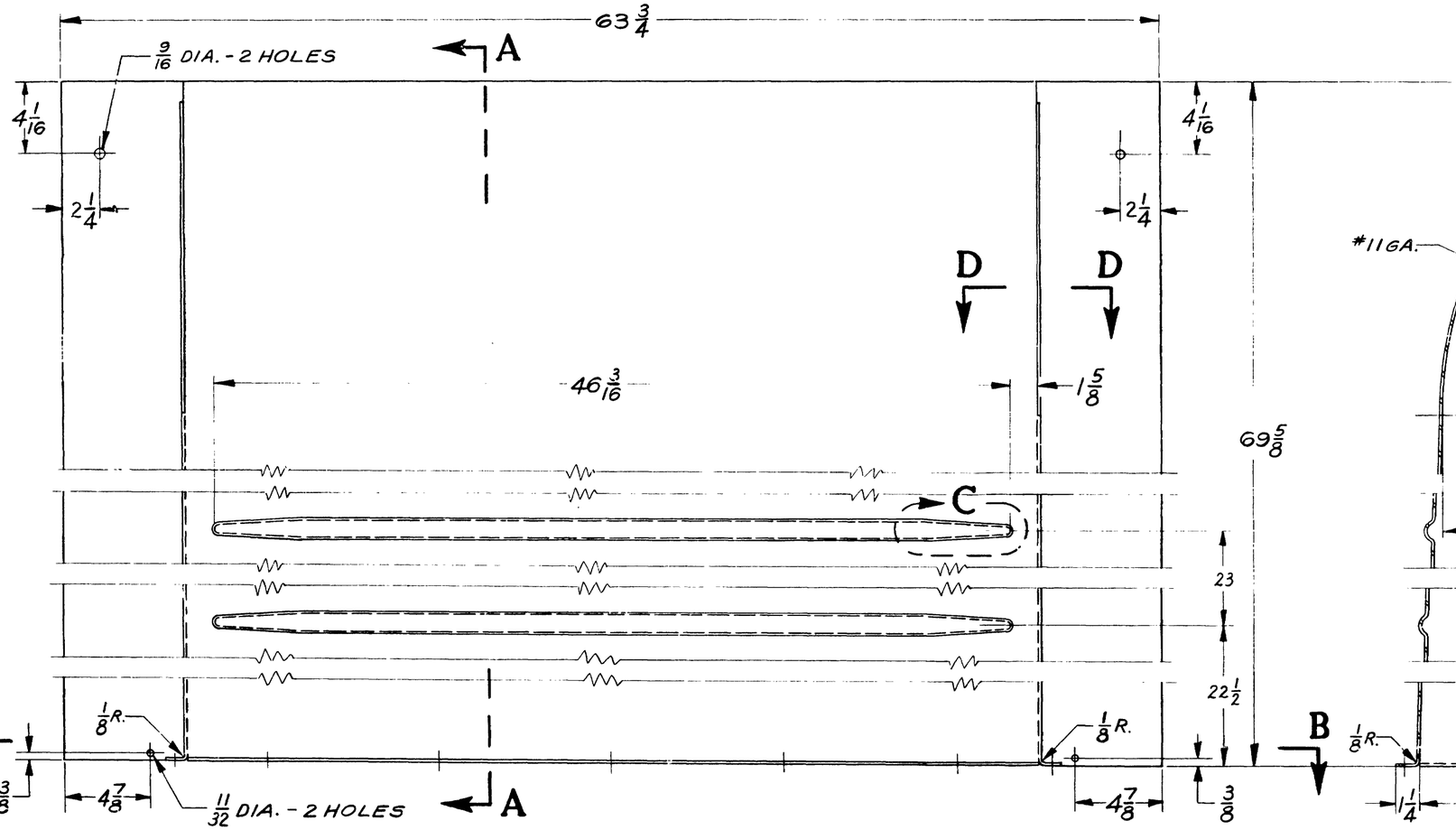

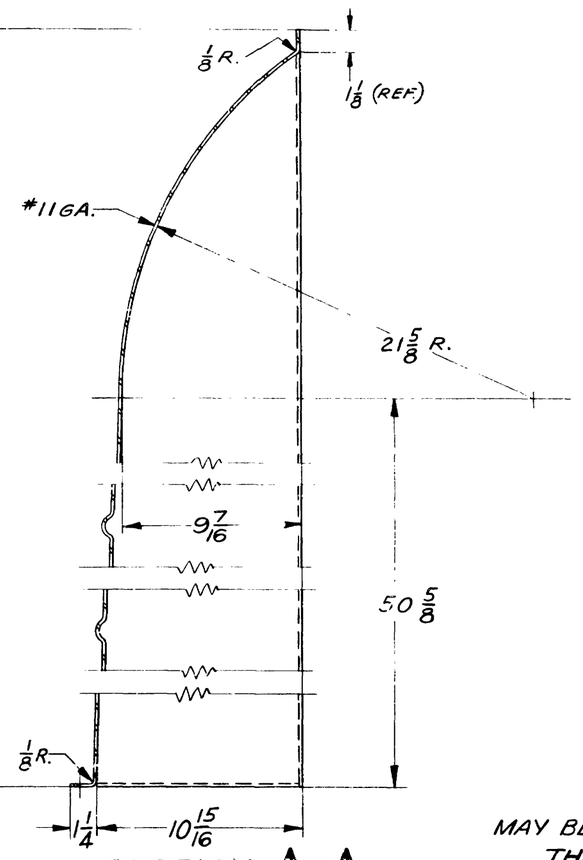

SECTION A-A

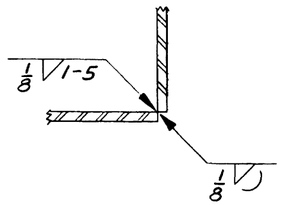

SECTION D-D

MAY BE MADE FROM MORE THAN ONE PIECE

R.F.C. NO.	REV. LET.	REVISION	DATE	BY	CK.	APV'D

R.F.C. NO.	REV. LET.	REVISION	DATE	BY	CK.	APV'D

R.F.C. NO.	REV. LET.	REVISION	DATE	BY	CK.	APV'D

R.F.C. NO.	REV. LET.	REVISION	DATE	BY	CK.	APV'D

R.F.C. NO.	REV. LET.	REVISION	DATE	BY	CK.	APV'D
FIRST USED ON	S040					

NO. REQUIRED PER ASSEMBLY

MATERIAL: EMS 57 HRSS P.D.R.Q.

DR. C. Richter DATE 5-6-70

CK. [illegible] 6-15-70

SUP. [illegible] CK. ENG. [illegible]

WELD. NON. BOD. ENGR. F.P. 6-22-70

MATL. [illegible] ENGR. [illegible] 6-22-70

NAME OF PART

PART NO.

EF. NO.

ELECTRO-MOTIVE DIVISION
GENERAL MOTORS CORPORATION
LA GRANGE, ILLINOIS, U.S.A.

CLOSURE PANEL

DATE OF PRINT

PART NO. 8447382

Form ENO 419 G 500 2 69

GLENNON & KERR, INC., CHICAGO