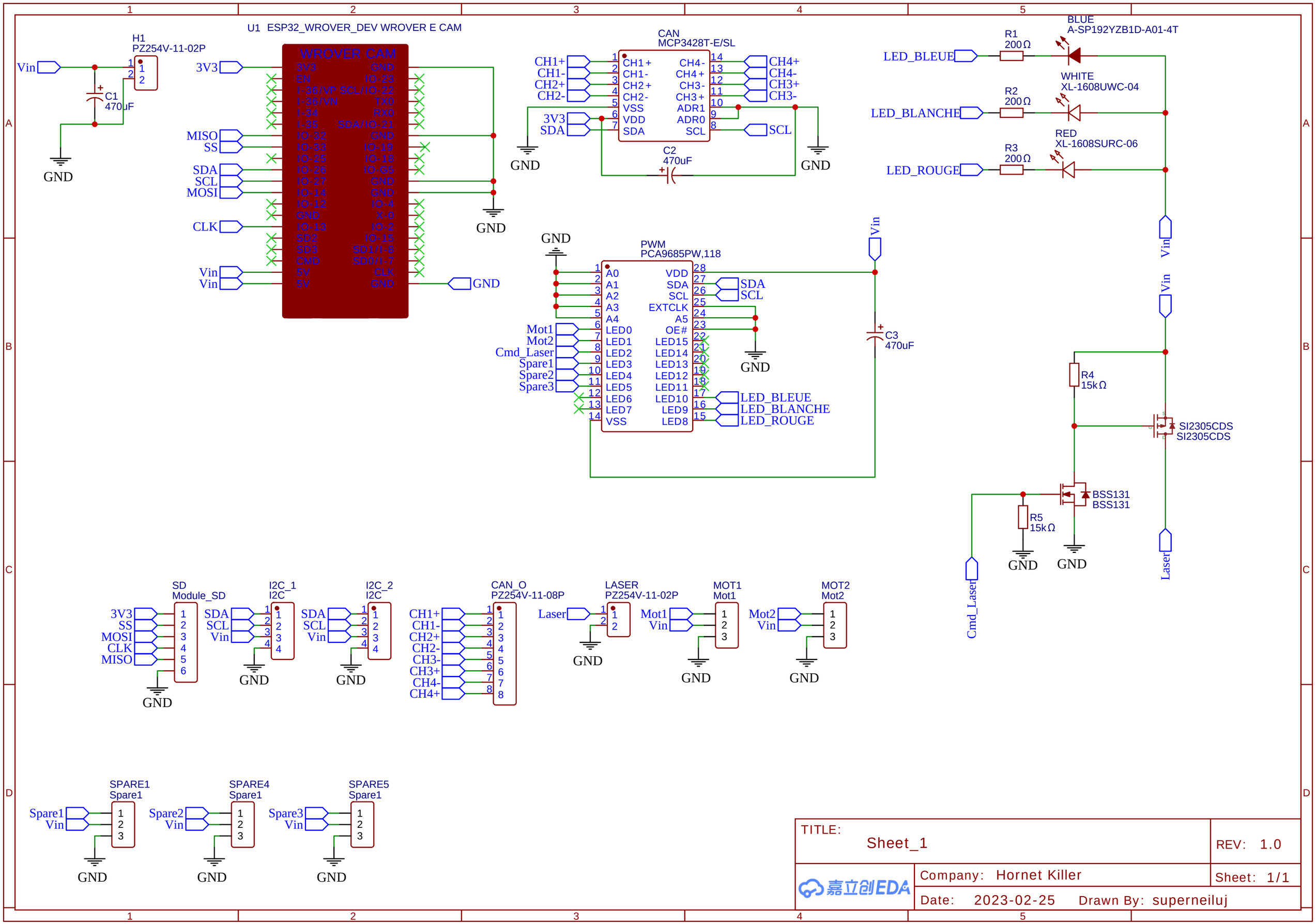

TITLE: Sheet_1

REV: 1.0

Company: Hornet Killer

Sheet: 1/1

Date: 2023-02-25

Drawn By: superneiluj