FABRICATION MATERIALS

NO	REMARKS	SIZE (MM)	QTY	DESCRIPTION
				PIPE
1		150	0.3M	ANSI B36 10 PE SMLS PIPE STD
2		20	0.1M	ANSI B36 10 PE SMLS PIPE XS
				FITTINGS
3		150 x 20	1	BONNEY THREDOLET NPT #3000
				FLANGES
4		150	4	FLANGE WN ANSI B16.5 #150.RF

ERECTION MATERIALS

NO	REMARKS	SIZE (MM)	QTY	DESCRIPTION
				GASKETS
5		150	7	GASKET ANSI B16.21 #150.RF
				BOLTS
6		19	8	195 STUD BOLT CW HVY HEX NUTS
7		19	8	102 STUD BOLT CW HVY HEX NUTS
8		19	8	95 STUD BOLT CW HVY HEX NUTS
				VALVES / IN-LINE ITEMS
9		150	1	VALVE WFR CHK MISSION K #150.RF
10		150	1	VALVE GATE ANSI B16.10 #150.RF
11		20	1	VALVE GATE NPT #800
				INSTRUMENTS
12	FCV-1103	150	1	GLOBE VALVE

TEMPORARY ISO

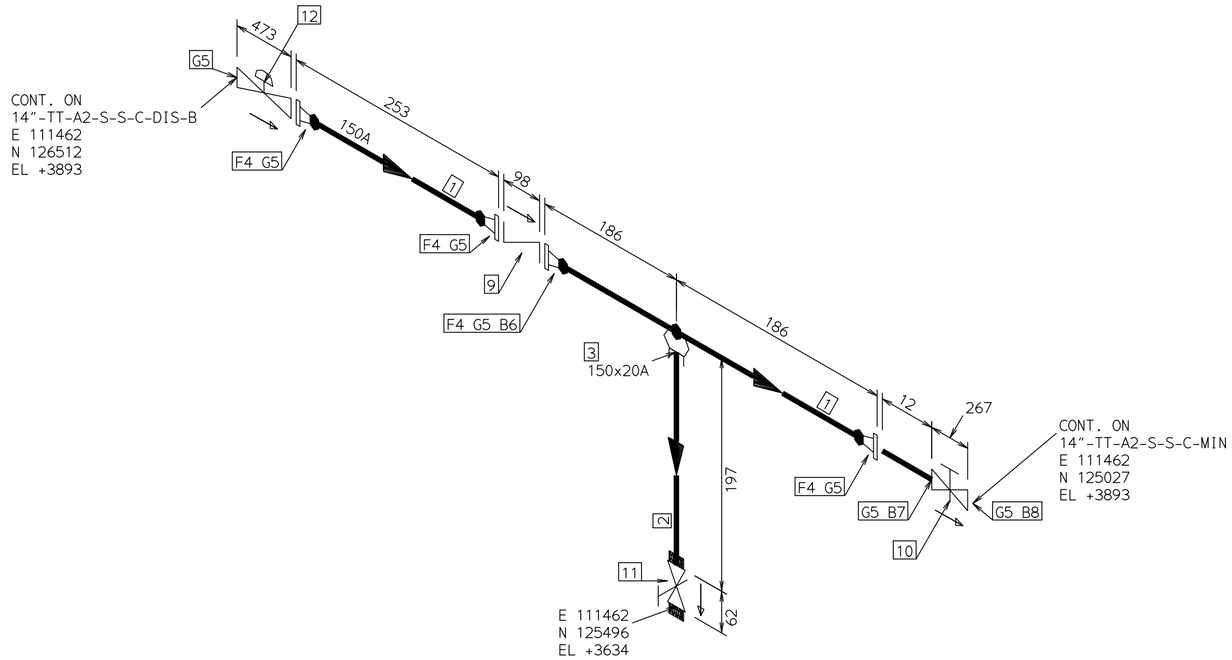

TEMPORARY ISO DRAWING

REV	DATE	DGND	CHKD	APRD	APRD	DESCRIPTION

ALL RIGHTS RESERVED
THIS DOCUMENT AND ANY DATA AND INFORMATION CONTAINED THEREIN ARE CONFIDENTIAL AND THE PROPERTY OF CHIYODA CORPORATION(CHIYODA) AND THE COPYRIGHT THEREIN IS VESTED IN CHIYODA. NO PART OF THIS DOCUMENT,DATA,OR INFORMATION SHALL BE DISCLOSED TO OTHERS OR REPRODUCED IN ANY MANNER OR USED FOR ANY PURPOSE WHATSOEVER,EXCEPT WITH THE PRIOR WRITTEN PERMISSION OF CHIYODA.

FOR

CHIYODA CORPORATION

TITLE

PIPING ISOMETRIC DRAWING FOR

LINE_ID: 14"-TT-A2-S-S-C-MIN-B 1 OF 1

AREA : 14"-TT-A2-S-S-C-MIN-B

SCALE NONE | JOB NO. AHH20E

PROJECT: CAP

DRAWING NO.: CAP-XX-XX-DW-XXXX

14"-TT-A2-S-S-C-MIN-B

REVISION

WORK NO.

EXTRACT DATE : 24 JUL 2019 13:34 ()