FABRICATION MATERIALS				
NO	REMARKS	SIZE (MM)	QTY	DESCRIPTION
				PIPE
1		250	6.1M	ANSI B36 10 PE SMLS PIPE STD
				FITTINGS
2		250 x 250	1	TEE ANSI B16.9 BW STD
3		250	4	ELBOW LR ANSI B16.9 BW
				FLANGES
4		250	2	FLANGE WN ANSI B16.5 #150.RF

ERECTION MATERIALS				
NO	REMARKS	SIZE (MM)	QTY	DESCRIPTION
				GASKETS
5		250	6	GASKET ANSI B16.21 #150.RF
				BOLTS
6		22	24	121 STUD BOLT CW HVY HEX NUTS
7		22	24	114 STUD BOLT CW HVY HEX NUTS
				VALVES / IN-LINE ITEMS
8		250	2	VALVE GATE ANSI B16.10 #150.RF

TEMPORARY ISO

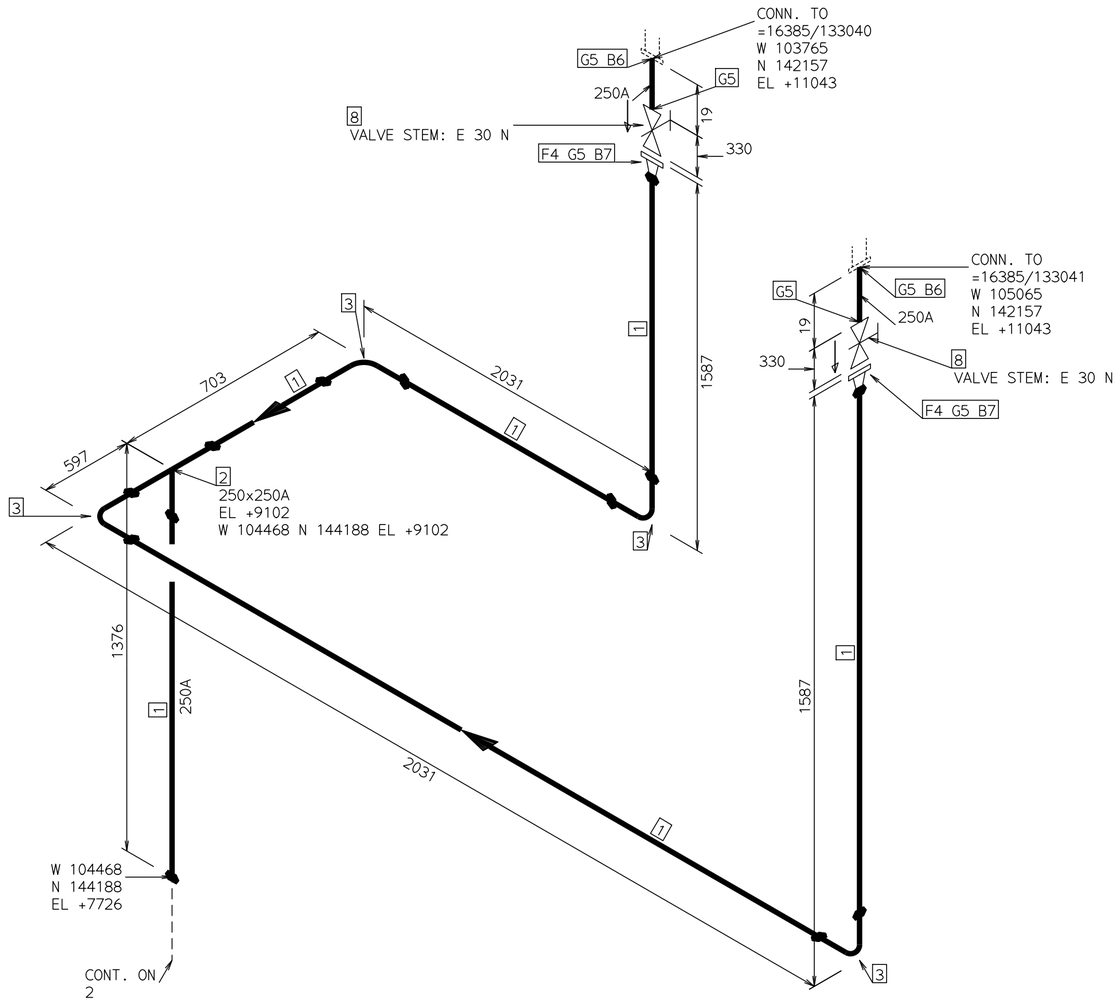

TEMPORARY ISO DRAWING

REV	DATE	DGND	CHKD	APRD	APRD	DESCRIPTION

ALL RIGHTS RESERVED
THIS DOCUMENT AND ANY DATA AND INFORMATION CONTAINED THEREIN ARE CONFIDENTIAL AND THE PROPERTY OF CHIYODA CORPORATION(CHIYODA) AND THE COPYRIGHT THEREIN IS VESTED IN CHIYODA. NO PART OF THIS DOCUMENT,DATA,OR INFORMATION SHALL BE DISCLOSED TO OTHERS OR REPRODUCED IN ANY MANNER OR USED FOR ANY PURPOSE WHATSOEVER,EXCEPT WITH THE PRIOR WRITTEN PERMISSION OF CHIYODA.

FOR

CHIYODA CORPORATION

TITLE

PIPING ISOMETRIC DRAWING FOR

LINE_ID: 10"-TV-C1-USDD-OUT 5 OF 5

AREA : 10"-TV-C1-USDD-OUT

SCALE NONE | JOB NO. AHH20E

PROJECT: CAP

DRAWING NO.: CAP-XX-XX-DW-XXXX

10"-TV-C1-USDD-OUT

REVISION

WORK NO.

EXTRACT DATE : 27 AUG 2019 14:04 ()

TEMPORARY ISO