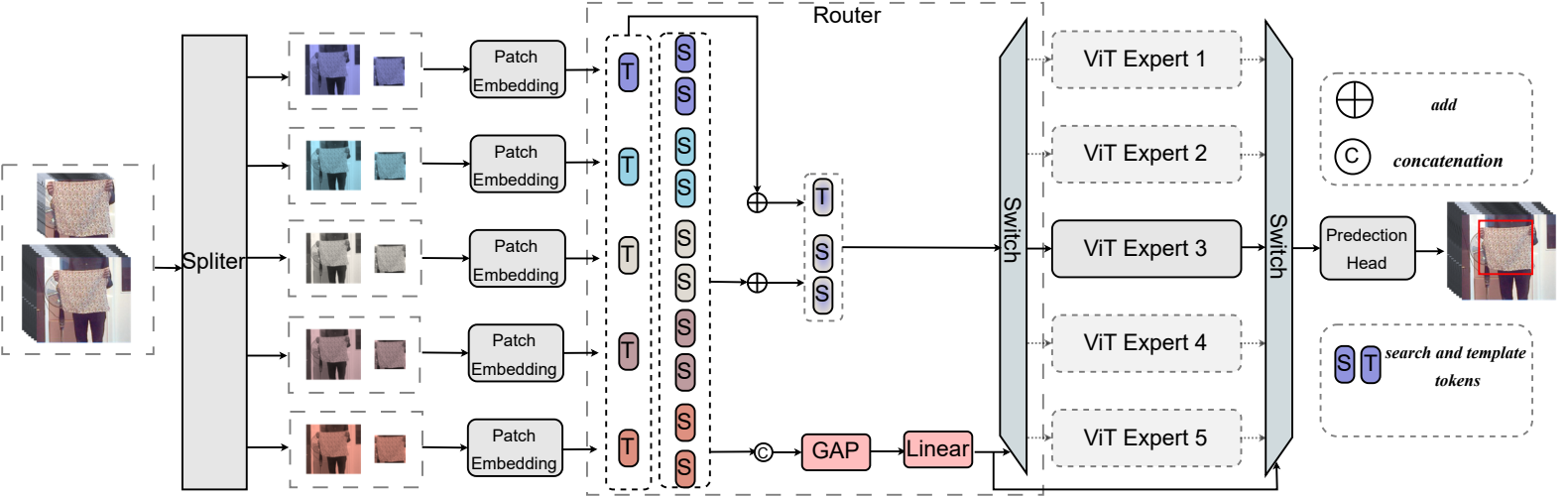
Router
Spliter
Patch Embedding
Patch Embedding
Patch Embedding
Patch Embedding
Patch Embedding
T
S
GAP
Linear
Switch
ViT Expert 1
ViT Expert 2
ViT Expert 3
ViT Expert 4
ViT Expert 5
Switch
Predection Head
add
concatenation
search and template tokens