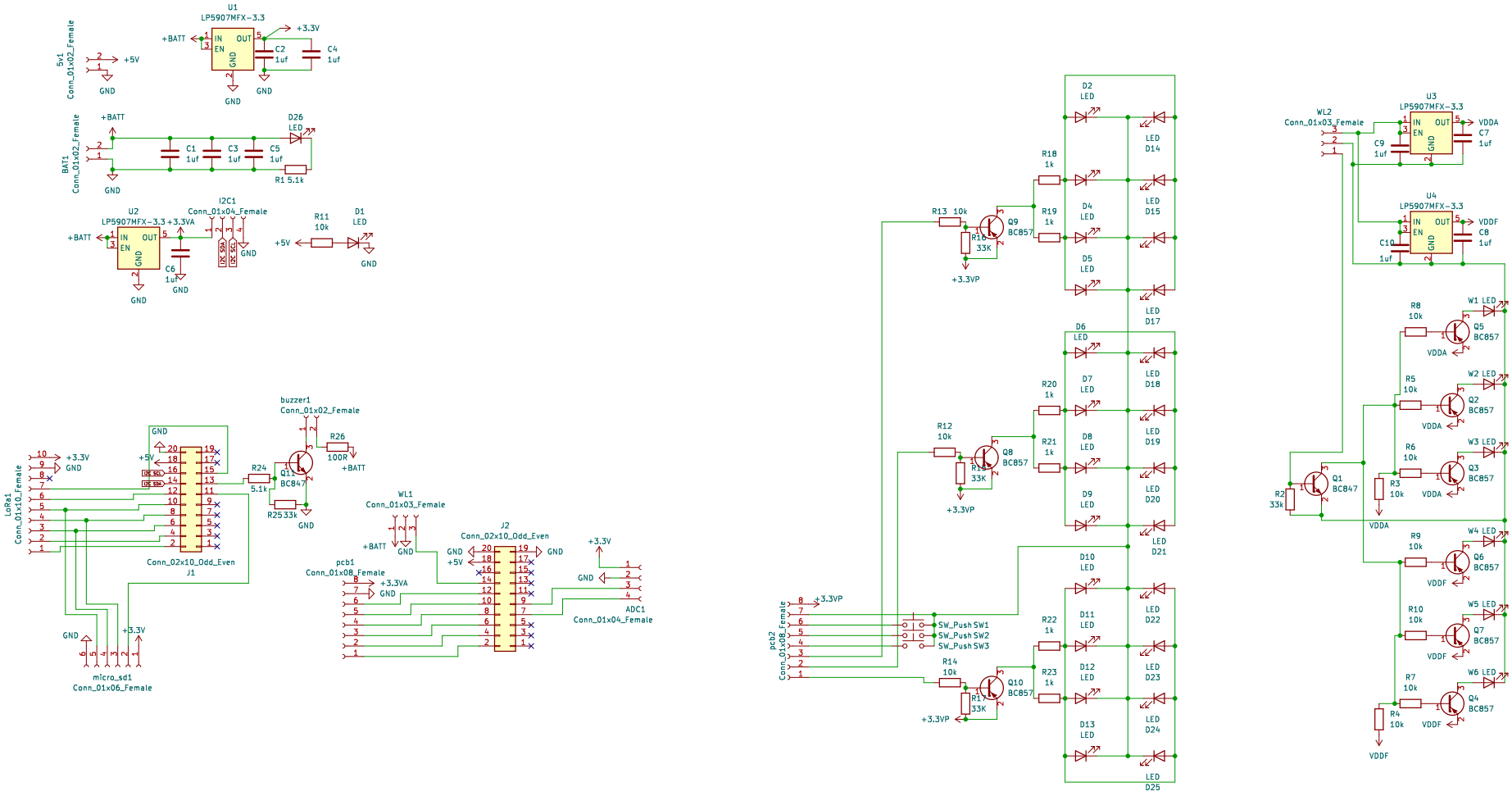
U1
LP5907MFX-3.3
+BATT
+3.3V
IN
EN
OUT
GND
C2
1uf
C4
1uf
5v1
Conn_01x02_Female
+5V
GND
BAT1
Conn_01x02_Female
C1
1uf
C3
1uf
C5
1uf
D26
LED
R1 5.1k
U2
LP5907MFX-3.3
+3.3VA
C6
1uf
I2C1
Conn_01x04_Female
I2C SDA
I2C SCL
R11
10k
D1
LED
LoRa1
Conn_01x10_Female
Conn_02x10_Odd_Even
J1
micro_sd1
Conn_01x06_Female
buzzer1
Conn_01x02_Female
R26
100R
Q11
BC847
R24
5.1k
R25 33k
WL1
Conn_01x03_Female
pcb1
Conn_01x08_Female
+3.3VA
J2
Conn_02x10_Odd_Even
ADC1
Conn_01x04_Female
D2
LED
D4
LED
D5
LED
D6
LED
D7
LED
D8
LED
D9
LED
D10
LED
D11
LED
D12
LED
D13
LED
D14
LED
D15
LED
D17
LED
D18
LED
D19
LED
D20
LED
D21
LED
D22
LED
D23
LED
D24
LED
D25
LED
R13 10k
R16
33K
Q9
BC857
+3.3VP
R18
1k
R19
1k
R12
10k
R15
33K
Q8
BC857
R20
1k
R21
1k
pcb2
Conn_01x08_Female
SW_Push SW1
SW_Push SW2
SW_Push SW3
R14
10k
R17
33K
Q10
BC857
R22
1k
R23
1k
WL2
Conn_01x03_Female
U3
LP5907MFX-3.3
VDDA
C7
1uf
C9
1uf
U4
LP5907MFX-3.3
VDDF
C8
1uf
C10
1uf
R8
10k
W1 LED
Q5
BC857
R5
10k
W2 LED
Q2
BC857
R6
10k
W3 LED
Q3
BC857
R2
33k
Q1
BC847
R3
10k
R9
10k
W4 LED
Q6
BC857
R10
10k
W5 LED
Q7
BC857
R7
10k
W6 LED
Q4
BC857
R4
10k