ZYNAPTRIX-9000 SERIES

INDUSTRIAL TURBO PUMP

OPERATION & MAINTENANCE MANUAL

TECHNICAL EXPLODED VIEW: INDUSTRIAL CENTRIFUGAL TURBO PUMP

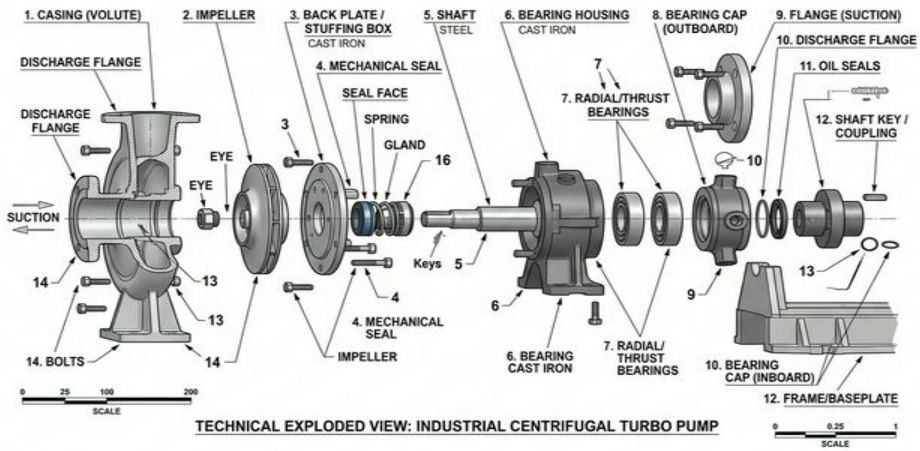

TECHNICAL EXPLODED VIEW: INDUSTRIAL CENTRIFUGAL TURBO PUMP

SCALE

1. CASING (VOLUTE)
2. IMPELLER
3. BACK PLATE / STUFFING BOX
4. MECHANICAL SEAL
5. SHAFT
6. BEARING HOUSING
7. RADIAL/THRUST BEARINGS
8. BEARING CAP
9. FLANGE (SUCTION)
10. DISCHARGE FLANGE
11. OIL SEALS
12. SHAFT KEY / COUPLING
13. GASKETS / O-RINGS
14. BOLTS

Table of Contents

1. Safety Instructions ..... Page 3

2. Technical Specifications ..... Page 8

3. Installation ..... Page 13

4. Operation and Control ..... Page 18

5. Telemetry & Sensor Integration ..... Page 23

6. Preventive Maintenance ..... Page 28

7. Troubleshooting & AI Diagnostics ..... Page 33

8. Appendices and Parts Lists ..... Page 38

1. Safety Instructions

WARNING: Failure to follow these instructions may lead to catastrophic failure or death.

LOTO Protocols: Always implement Lock-Out Tag-Out before servicing the bearing housing.

Hazard Zones: High pressure piping (>40 bar) must be shielded.

PPE Requirements: Safety goggles, steel-toed boots, and high-temp gloves are mandatory.

WARNING: Failure to follow these instructions may lead to catastrophic failure or death.

LOTO Protocols: Always implement Lock-Out Tag-Out before servicing the bearing housing.

Hazard Zones: High pressure piping (>40 bar) must be shielded.

PPE Requirements: Safety goggles, steel-toed boots, and high-temp gloves are mandatory.

WARNING: Failure to follow these instructions may lead to catastrophic failure or death.

LOTO Protocols: Always implement Lock-Out Tag-Out before servicing the bearing housing.

Hazard Zones: High pressure piping (>40 bar) must be shielded.

PPE Requirements: Safety goggles, steel-toed boots, and high-temp gloves are mandatory.

WARNING: Failure to follow these instructions may lead to catastrophic failure or death.

LOTO Protocols: Always implement Lock-Out Tag-Out before servicing the bearing housing.

Hazard Zones: High pressure piping (>40 bar) must be shielded.

PPE Requirements: Safety goggles, steel-toed boots, and high-temp gloves are mandatory.

WARNING: Failure to follow these instructions may lead to catastrophic failure or death.

LOTO Protocols: Always implement Lock-Out Tag-Out before servicing the bearing housing.

Hazard Zones: High pressure piping (>40 bar) must be shielded.

PPE Requirements: Safety goggles, steel-toed boots, and high-temp gloves are mandatory.

WARNING: Failure to follow these instructions may lead to catastrophic failure or death.

LOTO Protocols: Always implement Lock-Out Tag-Out before servicing the bearing housing.

Hazard Zones: High pressure piping (>40 bar) must be shielded.

PPE Requirements: Safety goggles, steel-toed boots, and high-temp gloves are mandatory.

WARNING: Failure to follow these instructions may lead to catastrophic failure or death.

LOTO Protocols: Always implement Lock-Out Tag-Out before servicing the bearing housing.

Hazard Zones: High pressure piping (>40 bar) must be shielded.

PPE Requirements: Safety goggles, steel-toed boots, and high-temp gloves are mandatory.

WARNING: Failure to follow these instructions may lead to catastrophic failure or death.

LOTO Protocols: Always implement Lock-Out Tag-Out before servicing the bearing housing.

Hazard Zones: High pressure piping (>40 bar) must be shielded.

PPE Requirements: Safety goggles, steel-toed boots, and high-temp gloves are mandatory.

Figure 1.1: Maintenance Safety Logic Flow

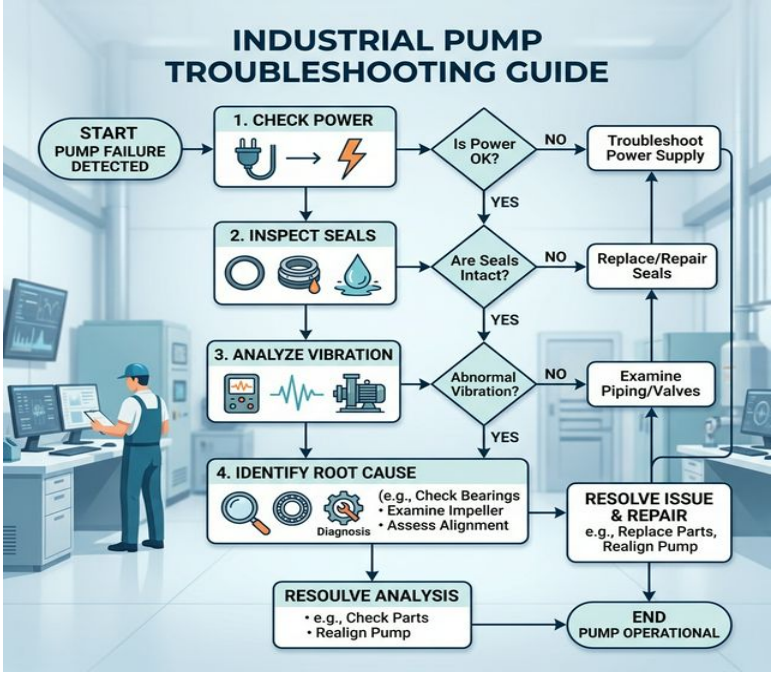

Clause 1.10: Specific local regulations regarding industrial centrifugal systems in high-heat environments. Ensure compliance with ISO 9001 and local machine directives (2006/42/EC). Periodic validation of pressure relief valves is required every 180 days of continuous operation. Documentation must be maintained in the central registry for audit purposes.

Clause 1.11: Specific local regulations regarding industrial centrifugal systems in high-heat environments. Ensure compliance with ISO 9001 and local machine directives (2006/42/EC). Periodic validation of pressure relief valves is required every 180 days of continuous

operation. Documentation must be maintained in the central registry for audit purposes.

Clause 1.12: Specific local regulations regarding industrial centrifugal systems in high-heat environments. Ensure compliance with ISO 9001 and local machine directives (2006/42/EC). Periodic validation of pressure relief valves is required every 180 days of continuous operation. Documentation must be maintained in the central registry for audit purposes.

Clause 1.13: Specific local regulations regarding industrial centrifugal systems in high-heat environments. Ensure compliance with ISO 9001 and local machine directives (2006/42/EC). Periodic validation of pressure relief valves is required every 180 days of continuous operation. Documentation must be maintained in the central registry for audit purposes.

Clause 1.14: Specific local regulations regarding industrial centrifugal systems in high-heat environments. Ensure compliance with ISO 9001 and local machine directives (2006/42/EC). Periodic validation of pressure relief valves is required every 180 days of continuous operation. Documentation must be maintained in the central registry for audit purposes.

Clause 1.15: Specific local regulations regarding industrial centrifugal systems in high-heat environments. Ensure compliance with ISO 9001 and local machine directives (2006/42/EC). Periodic validation of pressure relief valves is required every 180 days of continuous operation. Documentation must be maintained in the central registry for audit purposes.

Clause 1.16: Specific local regulations regarding industrial centrifugal systems in high-heat environments. Ensure compliance with ISO 9001 and local machine directives (2006/42/EC). Periodic validation of pressure relief valves is required every 180 days of continuous operation. Documentation must be maintained in the central registry for audit purposes.

Clause 1.17: Specific local regulations regarding industrial centrifugal systems in high-heat environments. Ensure compliance with ISO 9001 and local machine directives (2006/42/EC). Periodic validation of pressure relief valves is required every 180 days of continuous operation. Documentation must be maintained in the central registry for audit purposes.

Clause 1.18: Specific local regulations regarding industrial centrifugal systems in high-heat environments. Ensure compliance with ISO 9001 and local machine directives (2006/42/EC). Periodic validation of pressure relief valves is required every 180 days of continuous operation. Documentation must be maintained in the central registry for audit purposes.

Clause 1.19: Specific local regulations regarding industrial centrifugal systems in high-heat environments. Ensure compliance with ISO 9001 and local machine directives (2006/42/EC). Periodic validation of pressure relief valves is required every 180 days of continuous operation. Documentation must be maintained in the central registry for audit purposes.

Clause 1.20: Specific local regulations regarding industrial centrifugal systems in high-heat environments. Ensure compliance with ISO 9001 and local machine directives (2006/42/EC). Periodic validation of pressure relief valves is required every 180 days of continuous operation. Documentation must be maintained in the central registry for audit purposes.

Clause 1.21: Specific local regulations regarding industrial centrifugal systems in high-heat environments. Ensure compliance with ISO 9001 and local machine directives (2006/42/EC). Periodic validation of pressure relief valves is required every 180 days of continuous operation. Documentation must be maintained in the central registry for audit purposes.

Clause 1.22: Specific local regulations regarding industrial centrifugal systems in high-heat environments. Ensure compliance with ISO 9001 and local machine directives (2006/42/EC). Periodic validation of pressure relief valves is required every 180 days of continuous operation. Documentation must be maintained in the central registry for audit purposes.

Clause 1.23: Specific local regulations regarding industrial centrifugal systems in high-heat environments. Ensure compliance with ISO 9001 and local machine directives (2006/42/EC). Periodic validation of pressure relief valves is required every 180 days of continuous operation. Documentation must be maintained in the central registry for audit purposes.

Clause 1.24: Specific local regulations regarding industrial centrifugal systems in high-heat environments. Ensure compliance with ISO 9001 and local machine directives (2006/42/EC). Periodic validation of pressure relief valves is required every 180 days of continuous operation. Documentation must be maintained in the central registry for audit purposes.

Clause 1.25: Specific local regulations regarding industrial centrifugal systems in high-heat environments. Ensure compliance with ISO 9001 and local machine directives (2006/42/EC). Periodic validation of pressure relief valves is required every 180 days of continuous operation. Documentation must be maintained in the central registry for audit purposes.

Clause 1.26: Specific local regulations regarding industrial centrifugal systems in high-heat environments. Ensure compliance with ISO 9001 and local machine directives (2006/42/EC). Periodic validation of pressure relief valves is required every 180 days of continuous operation. Documentation must be maintained in the central registry for audit purposes.

Clause 1.27: Specific local regulations regarding industrial centrifugal systems in high-heat environments. Ensure compliance with ISO 9001 and local machine directives (2006/42/EC). Periodic validation of pressure relief valves is required every 180 days of continuous operation. Documentation must be maintained in the central registry for audit purposes.

Clause 1.28: Specific local regulations regarding industrial centrifugal systems in high-heat environments. Ensure compliance with ISO 9001 and local machine directives (2006/42/EC). Periodic validation of pressure relief valves is required every 180 days of continuous operation. Documentation must be maintained in the central registry for audit purposes.

Clause 1.29: Specific local regulations regarding industrial centrifugal systems in high-heat environments. Ensure compliance with ISO 9001 and local machine directives (2006/42/EC). Periodic validation of pressure relief valves is required every 180 days of continuous operation. Documentation must be maintained in the central registry for audit purposes.

Clause 1.30: Specific local regulations regarding industrial centrifugal systems in high-heat environments. Ensure compliance with ISO 9001 and local machine directives (2006/42/EC). Periodic validation of pressure relief valves is required every 180 days of continuous

operation. Documentation must be maintained in the central registry for audit purposes.

Clause 1.31: Specific local regulations regarding industrial centrifugal systems in high-heat environments. Ensure compliance with ISO 9001 and local machine directives (2006/42/EC). Periodic validation of pressure relief valves is required every 180 days of continuous operation. Documentation must be maintained in the central registry for audit purposes.

Clause 1.32: Specific local regulations regarding industrial centrifugal systems in high-heat environments. Ensure compliance with ISO 9001 and local machine directives (2006/42/EC). Periodic validation of pressure relief valves is required every 180 days of continuous operation. Documentation must be maintained in the central registry for audit purposes.

Clause 1.33: Specific local regulations regarding industrial centrifugal systems in high-heat environments. Ensure compliance with ISO 9001 and local machine directives (2006/42/EC). Periodic validation of pressure relief valves is required every 180 days of continuous operation. Documentation must be maintained in the central registry for audit purposes.

Clause 1.34: Specific local regulations regarding industrial centrifugal systems in high-heat environments. Ensure compliance with ISO 9001 and local machine directives (2006/42/EC). Periodic validation of pressure relief valves is required every 180 days of continuous operation. Documentation must be maintained in the central registry for audit purposes.

Clause 1.35: Specific local regulations regarding industrial centrifugal systems in high-heat environments. Ensure compliance with ISO 9001 and local machine directives (2006/42/EC). Periodic validation of pressure relief valves is required every 180 days of continuous operation. Documentation must be maintained in the central registry for audit purposes.

Clause 1.36: Specific local regulations regarding industrial centrifugal systems in high-heat environments. Ensure compliance with ISO 9001 and local machine directives (2006/42/EC). Periodic validation of pressure relief valves is required every 180 days of continuous operation. Documentation must be maintained in the central registry for audit purposes.

Clause 1.37: Specific local regulations regarding industrial centrifugal systems in high-heat environments. Ensure compliance with ISO 9001 and local machine directives (2006/42/EC). Periodic validation of pressure relief valves is required every 180 days of continuous operation. Documentation must be maintained in the central registry for audit purposes.

Clause 1.38: Specific local regulations regarding industrial centrifugal systems in high-heat environments. Ensure compliance with ISO 9001 and local machine directives (2006/42/EC). Periodic validation of pressure relief valves is required every 180 days of continuous operation. Documentation must be maintained in the central registry for audit purposes.

Clause 1.39: Specific local regulations regarding industrial centrifugal systems in high-heat environments. Ensure compliance with ISO 9001 and local machine directives (2006/42/EC). Periodic validation of pressure relief valves is required every 180 days of continuous operation. Documentation must be maintained in the central registry for audit purposes.

Clause 1.40: Specific local regulations regarding industrial centrifugal systems in high-heat environments. Ensure compliance with ISO 9001 and local machine directives (2006/42/EC). Periodic validation of pressure relief valves is required every 180 days of continuous operation. Documentation must be maintained in the central registry for audit purposes.

Clause 1.41: Specific local regulations regarding industrial centrifugal systems in high-heat environments. Ensure compliance with ISO 9001 and local machine directives (2006/42/EC). Periodic validation of pressure relief valves is required every 180 days of continuous operation. Documentation must be maintained in the central registry for audit purposes.

Clause 1.42: Specific local regulations regarding industrial centrifugal systems in high-heat environments. Ensure compliance with ISO 9001 and local machine directives (2006/42/EC). Periodic validation of pressure relief valves is required every 180 days of continuous operation. Documentation must be maintained in the central registry for audit purposes.

Clause 1.43: Specific local regulations regarding industrial centrifugal systems in high-heat environments. Ensure compliance with ISO 9001 and local machine directives (2006/42/EC). Periodic validation of pressure relief valves is required every 180 days of continuous operation. Documentation must be maintained in the central registry for audit purposes.

Clause 1.44: Specific local regulations regarding industrial centrifugal systems in high-heat environments. Ensure compliance with ISO 9001 and local machine directives (2006/42/EC). Periodic validation of pressure relief valves is required every 180 days of continuous operation. Documentation must be maintained in the central registry for audit purposes.

Clause 1.45: Specific local regulations regarding industrial centrifugal systems in high-heat environments. Ensure compliance with ISO 9001 and local machine directives (2006/42/EC). Periodic validation of pressure relief valves is required every 180 days of continuous operation. Documentation must be maintained in the central registry for audit purposes.

Clause 1.46: Specific local regulations regarding industrial centrifugal systems in high-heat environments. Ensure compliance with ISO 9001 and local machine directives (2006/42/EC). Periodic validation of pressure relief valves is required every 180 days of continuous operation. Documentation must be maintained in the central registry for audit purposes.

Clause 1.47: Specific local regulations regarding industrial centrifugal systems in high-heat environments. Ensure compliance with ISO 9001 and local machine directives (2006/42/EC). Periodic validation of pressure relief valves is required every 180 days of continuous operation. Documentation must be maintained in the central registry for audit purposes.

Clause 1.48: Specific local regulations regarding industrial centrifugal systems in high-heat environments. Ensure compliance with ISO 9001 and local machine directives (2006/42/EC). Periodic validation of pressure relief valves is required every 180 days of continuous operation. Documentation must be maintained in the central registry for audit purposes.

Clause 1.49: Specific local regulations regarding industrial centrifugal systems in high-heat environments. Ensure compliance with ISO 9001 and local machine directives (2006/42/EC). Periodic validation of pressure relief valves is required every 180 days of continuous

operation. Documentation must be maintained in the central registry for audit purposes.

Clause 1.50: Specific local regulations regarding industrial centrifugal systems in high-heat environments. Ensure compliance with ISO 9001 and local machine directives (2006/42/EC). Periodic validation of pressure relief valves is required every 180 days of continuous operation. Documentation must be maintained in the central registry for audit purposes.

Clause 1.51: Specific local regulations regarding industrial centrifugal systems in high-heat environments. Ensure compliance with ISO 9001 and local machine directives (2006/42/EC). Periodic validation of pressure relief valves is required every 180 days of continuous operation. Documentation must be maintained in the central registry for audit purposes.

Clause 1.52: Specific local regulations regarding industrial centrifugal systems in high-heat environments. Ensure compliance with ISO 9001 and local machine directives (2006/42/EC). Periodic validation of pressure relief valves is required every 180 days of continuous operation. Documentation must be maintained in the central registry for audit purposes.

Clause 1.53: Specific local regulations regarding industrial centrifugal systems in high-heat environments. Ensure compliance with ISO 9001 and local machine directives (2006/42/EC). Periodic validation of pressure relief valves is required every 180 days of continuous operation. Documentation must be maintained in the central registry for audit purposes.

Clause 1.54: Specific local regulations regarding industrial centrifugal systems in high-heat environments. Ensure compliance with ISO 9001 and local machine directives (2006/42/EC). Periodic validation of pressure relief valves is required every 180 days of continuous operation. Documentation must be maintained in the central registry for audit purposes.

2. Technical Specifications

Attribute	Value
Max Temperature	250°C
Max Pressure	65 bar
Motor Rating	450 kW
Vibration Tolerance	12.5 mm/s
Lubricant Type	Synthetic ISO VG 68
Seal Type	Double Mechanical

Figure 2.1: Multi-stage Cross Section

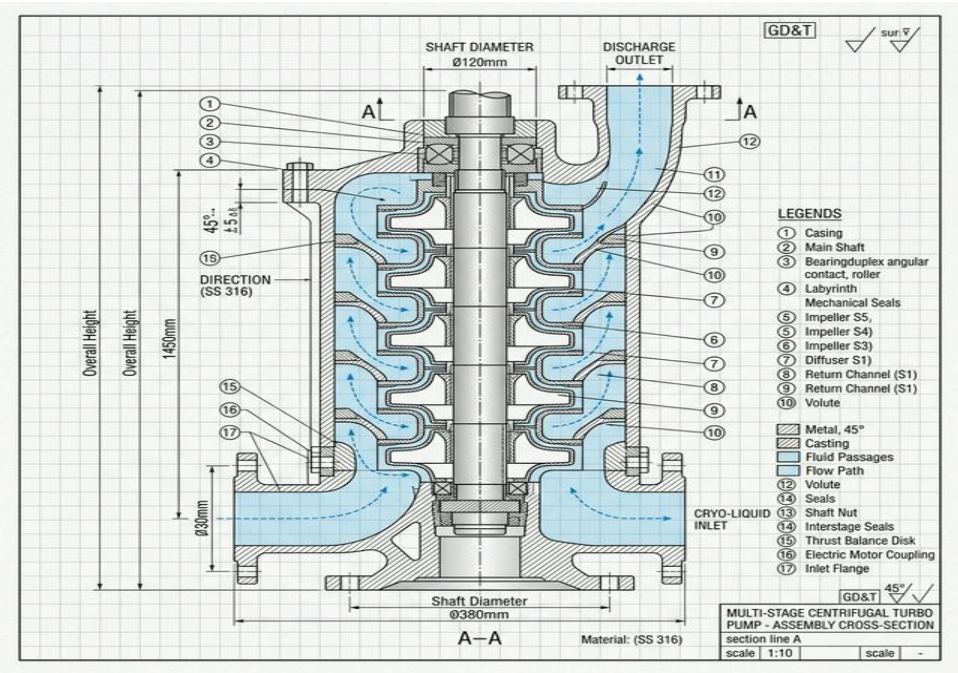

Pump Curve Data Model Z-9000-X0: Flow rate vs Head analysis indicates 88% efficiency at BEP (Best Efficiency Point). NPSH required is 4.2m at standard operating temperature of 180°C. Material of construction: Duplex Stainless Steel UNS S32205 for high chloride resistance. Bearing housing cooling circuit is optimized for continuous 24/7 industrial deployment.

Pump Curve Data Model Z-9000-X1: Flow rate vs Head analysis indicates 88% efficiency at BEP (Best Efficiency Point). NPSH required is 4.2m at standard operating temperature of 180°C. Material of construction: Duplex Stainless Steel UNS S32205 for high chloride resistance. Bearing housing cooling circuit is optimized for continuous 24/7 industrial deployment.

Pump Curve Data Model Z-9000-X2: Flow rate vs Head analysis indicates 88% efficiency at BEP (Best Efficiency Point). NPSH required is 4.2m at standard operating temperature of 180°C. Material of construction: Duplex Stainless Steel UNS S32205 for high chloride resistance. Bearing housing cooling circuit is optimized for continuous 24/7 industrial deployment.

Pump Curve Data Model Z-9000-X3: Flow rate vs Head analysis indicates 88% efficiency at BEP (Best Efficiency Point). NPSH required is 4.2m at standard operating temperature of 180°C. Material of construction: Duplex Stainless Steel UNS S32205 for high chloride resistance. Bearing housing cooling circuit is optimized for continuous 24/7 industrial deployment.

Pump Curve Data Model Z-9000-X4: Flow rate vs Head analysis indicates 88% efficiency at BEP (Best Efficiency Point). NPSH required is 4.2m at standard operating temperature of 180°C. Material of construction: Duplex Stainless Steel UNS S32205 for high chloride resistance. Bearing housing cooling circuit is optimized for continuous 24/7 industrial deployment.

Pump Curve Data Model Z-9000-X5: Flow rate vs Head analysis indicates 88% efficiency at BEP (Best Efficiency Point). NPSH required is 4.2m at standard operating temperature of 180°C. Material of construction: Duplex Stainless Steel UNS S32205 for high chloride resistance. Bearing housing cooling circuit is optimized for continuous 24/7 industrial deployment.

Pump Curve Data Model Z-9000-X6: Flow rate vs Head analysis indicates 88% efficiency at BEP (Best Efficiency Point). NPSH required is 4.2m at standard operating temperature of 180°C. Material of construction: Duplex Stainless Steel UNS S32205 for high chloride resistance. Bearing housing cooling circuit is optimized for continuous 24/7 industrial deployment.

Pump Curve Data Model Z-9000-X7: Flow rate vs Head analysis indicates 88% efficiency at BEP (Best Efficiency Point). NPSH required is 4.2m at standard operating temperature of 180°C. Material of construction: Duplex Stainless Steel UNS S32205 for high chloride resistance. Bearing housing cooling circuit is optimized for continuous 24/7 industrial deployment.

Pump Curve Data Model Z-9000-X8: Flow rate vs Head analysis indicates 88% efficiency at BEP (Best Efficiency Point). NPSH required is 4.2m at standard operating temperature of 180°C. Material of construction: Duplex Stainless Steel UNS S32205 for high chloride resistance. Bearing housing cooling circuit is optimized for continuous 24/7 industrial deployment.

Pump Curve Data Model Z-9000-X9: Flow rate vs Head analysis indicates 88% efficiency at BEP (Best Efficiency Point). NPSH required is 4.2m at standard operating temperature of 180°C. Material of construction: Duplex Stainless Steel UNS S32205 for high chloride resistance. Bearing housing cooling circuit is optimized for continuous 24/7 industrial deployment.

Pump Curve Data Model Z-9000-X10: Flow rate vs Head analysis indicates 88% efficiency at BEP (Best Efficiency Point). NPSH required is 4.2m at standard operating temperature of 180°C. Material of construction: Duplex Stainless Steel UNS S32205 for high chloride resistance. Bearing housing cooling circuit is optimized for continuous 24/7 industrial deployment.

Pump Curve Data Model Z-9000-X11: Flow rate vs Head analysis indicates 88% efficiency at BEP (Best Efficiency Point). NPSH required is 4.2m at standard operating temperature of 180°C. Material of construction: Duplex Stainless Steel UNS S32205 for high chloride resistance. Bearing housing cooling circuit is optimized for continuous 24/7 industrial deployment.

Pump Curve Data Model Z-9000-X12: Flow rate vs Head analysis indicates 88% efficiency at BEP (Best Efficiency Point). NPSH required is 4.2m at standard operating temperature of 180°C. Material of construction: Duplex Stainless Steel UNS S32205 for high chloride resistance. Bearing housing cooling circuit is optimized for continuous 24/7 industrial deployment.

Pump Curve Data Model Z-9000-X13: Flow rate vs Head analysis indicates 88% efficiency at BEP (Best Efficiency Point). NPSH required is 4.2m at standard operating temperature of 180°C. Material of construction: Duplex Stainless Steel UNS S32205 for high chloride resistance. Bearing housing cooling circuit is optimized for continuous 24/7 industrial deployment.

Pump Curve Data Model Z-9000-X14: Flow rate vs Head analysis indicates 88% efficiency at BEP (Best Efficiency Point). NPSH required is 4.2m at standard operating temperature of 180°C. Material of construction: Duplex Stainless Steel UNS S32205 for high chloride resistance. Bearing housing cooling circuit is optimized for continuous 24/7 industrial deployment.

Pump Curve Data Model Z-9000-X15: Flow rate vs Head analysis indicates 88% efficiency at BEP (Best Efficiency Point). NPSH required is 4.2m at standard operating temperature of 180°C. Material of construction: Duplex Stainless Steel UNS S32205 for high chloride resistance. Bearing housing cooling circuit is optimized for continuous 24/7 industrial deployment.

Pump Curve Data Model Z-9000-X16: Flow rate vs Head analysis indicates 88% efficiency at BEP (Best Efficiency Point). NPSH required is 4.2m at standard operating temperature of 180°C. Material of construction: Duplex Stainless Steel UNS S32205 for high chloride resistance. Bearing housing cooling circuit is optimized for continuous 24/7 industrial deployment.

Pump Curve Data Model Z-9000-X17: Flow rate vs Head analysis indicates 88% efficiency at BEP (Best Efficiency Point). NPSH required is 4.2m at standard operating temperature of 180°C. Material of construction: Duplex Stainless Steel UNS S32205 for high chloride resistance. Bearing housing cooling circuit is optimized for continuous 24/7 industrial deployment.

Pump Curve Data Model Z-9000-X18: Flow rate vs Head analysis indicates 88% efficiency at BEP (Best Efficiency Point). NPSH required is 4.2m at standard operating temperature of 180°C. Material of construction: Duplex Stainless Steel UNS S32205 for high chloride resistance. Bearing housing cooling circuit is optimized for continuous 24/7 industrial deployment.

Pump Curve Data Model Z-9000-X19: Flow rate vs Head analysis indicates 88% efficiency at BEP (Best Efficiency Point). NPSH required is 4.2m at standard operating temperature of 180°C. Material of construction: Duplex Stainless Steel UNS S32205 for high chloride resistance. Bearing housing cooling circuit is optimized for continuous 24/7 industrial deployment.

Pump Curve Data Model Z-9000-X20: Flow rate vs Head analysis indicates 88% efficiency at BEP (Best Efficiency Point). NPSH required is 4.2m at standard operating temperature of 180°C. Material of construction: Duplex Stainless Steel UNS S32205 for high chloride resistance. Bearing housing cooling circuit is optimized for continuous 24/7 industrial deployment.

Pump Curve Data Model Z-9000-X21: Flow rate vs Head analysis indicates 88% efficiency at BEP (Best Efficiency Point). NPSH required is 4.2m at standard operating temperature of 180°C. Material of construction: Duplex Stainless Steel UNS S32205 for high chloride resistance. Bearing housing cooling circuit is optimized for continuous 24/7 industrial deployment.

Pump Curve Data Model Z-9000-X22: Flow rate vs Head analysis indicates 88% efficiency at BEP (Best Efficiency Point). NPSH required is 4.2m at standard operating temperature of 180°C. Material of construction: Duplex Stainless Steel UNS S32205 for high chloride resistance. Bearing housing cooling circuit is optimized for continuous 24/7 industrial deployment.

Pump Curve Data Model Z-9000-X23: Flow rate vs Head analysis indicates 88% efficiency at BEP (Best Efficiency Point). NPSH required is 4.2m at standard operating temperature of 180°C. Material of construction: Duplex Stainless Steel UNS S32205 for high chloride resistance. Bearing housing cooling circuit is optimized for continuous 24/7 industrial deployment.

Pump Curve Data Model Z-9000-X24: Flow rate vs Head analysis indicates 88% efficiency at BEP (Best Efficiency Point). NPSH required is 4.2m at standard operating temperature of 180°C. Material of construction: Duplex Stainless Steel UNS S32205 for high chloride resistance. Bearing housing cooling circuit is optimized for continuous 24/7 industrial deployment.

3. Installation Guide

Site Preparation: The concrete foundation must be at least 3x the weight of the pump assembly to dampen vibrations. Mounting bolts should be M24 grade 8.8. Piping alignment must be accurate within 0.1mm to prevent suction/discharge stress on the pump nozzles.

Figure 3.1: Control Wiring and VFD Schematics

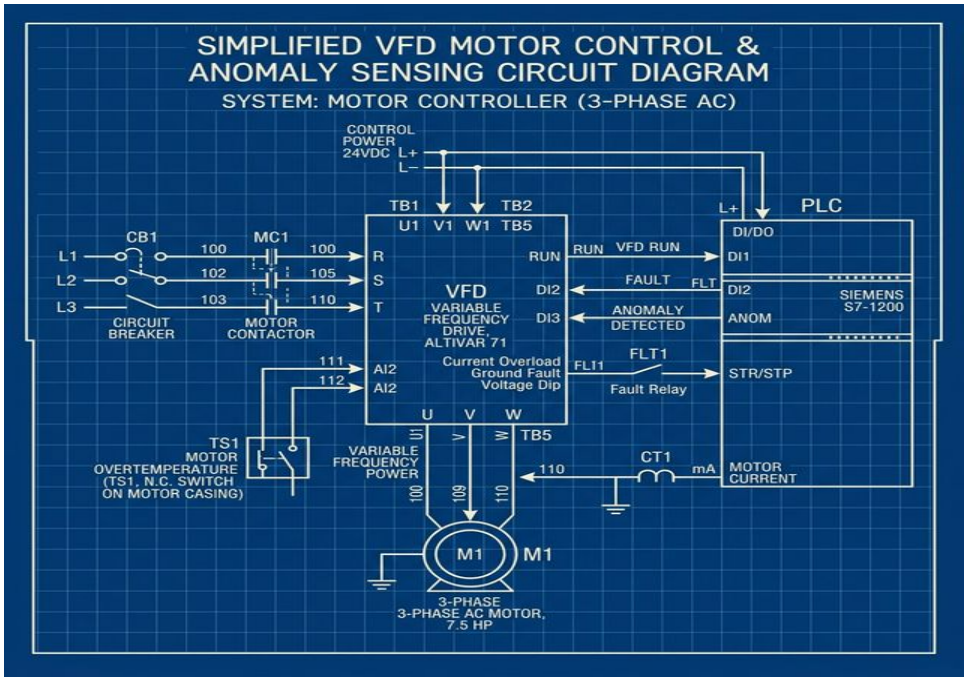

Align the coupling using a laser alignment tool. Check for soft foot and ensure the motor shaft is centered relative to the pump casing. Tighten all bolts using a torque wrench following the cross-pattern sequence defined in Appendix B. Electrical grounding must be verified with < 1 Ohm resistance to the main building earth.

Align the coupling using a laser alignment tool. Check for soft foot and ensure the motor shaft is centered relative to the pump casing. Tighten all bolts using a torque wrench following the cross-pattern sequence defined in Appendix B. Electrical grounding must be verified with < 1 Ohm resistance to the main building earth.

Align the coupling using a laser alignment tool. Check for soft foot and ensure the motor shaft is centered relative to the pump casing. Tighten all bolts using a torque wrench following the cross-pattern sequence defined in Appendix B. Electrical grounding must be verified with < 1 Ohm resistance to the main building earth.

Align the coupling using a laser alignment tool. Check for soft foot and ensure the motor shaft is centered relative to the pump casing. Tighten all bolts using a torque wrench following the cross-pattern sequence defined in Appendix B. Electrical grounding must be verified with < 1 Ohm resistance to the main building earth.

Align the coupling using a laser alignment tool. Check for soft foot and ensure the motor shaft is centered relative to the pump casing. Tighten all bolts using a torque wrench following the cross-pattern sequence defined in Appendix B. Electrical grounding must be verified with < 1 Ohm resistance to the main building earth.

Align the coupling using a laser alignment tool. Check for soft foot and ensure the motor shaft is centered relative to the pump casing. Tighten all bolts using a torque wrench following the cross-pattern sequence defined in Appendix B. Electrical grounding must be verified with < 1 Ohm resistance to the main building earth.

Align the coupling using a laser alignment tool. Check for soft foot and ensure the motor shaft is centered relative to the pump casing. Tighten all bolts using a torque wrench following the cross-pattern sequence defined in Appendix B. Electrical grounding must be verified with < 1 Ohm resistance to the main building earth.

Align the coupling using a laser alignment tool. Check for soft foot and ensure the motor shaft is centered relative to the pump casing. Tighten all bolts using a torque wrench following the cross-pattern sequence defined in Appendix B. Electrical grounding must be verified with < 1 Ohm resistance to the main building earth.

Align the coupling using a laser alignment tool. Check for soft foot and ensure the motor shaft is centered relative to the pump casing. Tighten all bolts using a torque wrench following the cross-pattern sequence defined in Appendix B. Electrical grounding must be verified with < 1 Ohm resistance to the main building earth.

Align the coupling using a laser alignment tool. Check for soft foot and ensure the motor shaft is centered relative to the pump casing. Tighten all bolts using a torque wrench following the cross-pattern sequence defined in Appendix B. Electrical grounding must be verified with < 1 Ohm resistance to the main building earth.

Align the coupling using a laser alignment tool. Check for soft foot and ensure the motor shaft is centered relative to the pump casing. Tighten all bolts using a torque wrench following the cross-pattern sequence defined in Appendix B. Electrical grounding must be verified with < 1 Ohm resistance to the main building earth.

Align the coupling using a laser alignment tool. Check for soft foot and ensure the motor shaft is centered relative to the pump casing. Tighten all bolts using a torque wrench following the cross-pattern sequence defined in Appendix B. Electrical grounding must be verified with < 1 Ohm resistance to the main building earth.

Align the coupling using a laser alignment tool. Check for soft foot and ensure the motor shaft is centered relative to the pump casing. Tighten all bolts using a torque wrench following the cross-pattern sequence defined in Appendix B. Electrical grounding must be verified with < 1 Ohm resistance to the main building earth.

Align the coupling using a laser alignment tool. Check for soft foot and ensure the motor shaft is centered relative to the pump casing. Tighten all bolts using a torque wrench following the cross-pattern sequence defined in Appendix B. Electrical grounding must be verified with < 1 Ohm resistance to the main building earth.

Align the coupling using a laser alignment tool. Check for soft foot and ensure the motor shaft is centered relative to the pump casing. Tighten all bolts using a torque wrench following the cross-pattern sequence defined in Appendix B. Electrical grounding must be verified with < 1

Ohm resistance to the main building earth.

Align the coupling using a laser alignment tool. Check for soft foot and ensure the motor shaft is centered relative to the pump casing. Tighten all bolts using a torque wrench following the cross-pattern sequence defined in Appendix B. Electrical grounding must be verified with < 1 Ohm resistance to the main building earth.

Align the coupling using a laser alignment tool. Check for soft foot and ensure the motor shaft is centered relative to the pump casing. Tighten all bolts using a torque wrench following the cross-pattern sequence defined in Appendix B. Electrical grounding must be verified with < 1 Ohm resistance to the main building earth.

Align the coupling using a laser alignment tool. Check for soft foot and ensure the motor shaft is centered relative to the pump casing. Tighten all bolts using a torque wrench following the cross-pattern sequence defined in Appendix B. Electrical grounding must be verified with < 1 Ohm resistance to the main building earth.

Align the coupling using a laser alignment tool. Check for soft foot and ensure the motor shaft is centered relative to the pump casing. Tighten all bolts using a torque wrench following the cross-pattern sequence defined in Appendix B. Electrical grounding must be verified with < 1 Ohm resistance to the main building earth.

Align the coupling using a laser alignment tool. Check for soft foot and ensure the motor shaft is centered relative to the pump casing. Tighten all bolts using a torque wrench following the cross-pattern sequence defined in Appendix B. Electrical grounding must be verified with < 1 Ohm resistance to the main building earth.

Align the coupling using a laser alignment tool. Check for soft foot and ensure the motor shaft is centered relative to the pump casing. Tighten all bolts using a torque wrench following the cross-pattern sequence defined in Appendix B. Electrical grounding must be verified with < 1 Ohm resistance to the main building earth.

Align the coupling using a laser alignment tool. Check for soft foot and ensure the motor shaft is centered relative to the pump casing. Tighten all bolts using a torque wrench following the cross-pattern sequence defined in Appendix B. Electrical grounding must be verified with < 1 Ohm resistance to the main building earth.

Align the coupling using a laser alignment tool. Check for soft foot and ensure the motor shaft is centered relative to the pump casing. Tighten all bolts using a torque wrench following the cross-pattern sequence defined in Appendix B. Electrical grounding must be verified with < 1 Ohm resistance to the main building earth.

Align the coupling using a laser alignment tool. Check for soft foot and ensure the motor shaft is centered relative to the pump casing. Tighten all bolts using a torque wrench following the cross-pattern sequence defined in Appendix B. Electrical grounding must be verified with < 1 Ohm resistance to the main building earth.

Align the coupling using a laser alignment tool. Check for soft foot and ensure the motor shaft is centered relative to the pump casing. Tighten all bolts using a torque wrench following the cross-pattern sequence defined in Appendix B. Electrical grounding must be verified with < 1 Ohm resistance to the main building earth.

Align the coupling using a laser alignment tool. Check for soft foot and ensure the motor shaft is centered relative to the pump casing. Tighten all bolts using a torque wrench following the cross-pattern sequence defined in Appendix B. Electrical grounding must be verified with < 1 Ohm resistance to the main building earth.

Align the coupling using a laser alignment tool. Check for soft foot and ensure the motor shaft is centered relative to the pump casing. Tighten all bolts using a torque wrench following the cross-pattern sequence defined in Appendix B. Electrical grounding must be verified with < 1 Ohm resistance to the main building earth.

Align the coupling using a laser alignment tool. Check for soft foot and ensure the motor shaft is centered relative to the pump casing. Tighten all bolts using a torque wrench following the cross-pattern sequence defined in Appendix B. Electrical grounding must be verified with < 1 Ohm resistance to the main building earth.

Align the coupling using a laser alignment tool. Check for soft foot and ensure the motor shaft is centered relative to the pump casing. Tighten all bolts using a torque wrench following the cross-pattern sequence defined in Appendix B. Electrical grounding must be verified with < 1 Ohm resistance to the main building earth.

Align the coupling using a laser alignment tool. Check for soft foot and ensure the motor shaft is centered relative to the pump casing. Tighten all bolts using a torque wrench following the cross-pattern sequence defined in Appendix B. Electrical grounding must be verified with < 1 Ohm resistance to the main building earth.

Align the coupling using a laser alignment tool. Check for soft foot and ensure the motor shaft is centered relative to the pump casing. Tighten all bolts using a torque wrench following the cross-pattern sequence defined in Appendix B. Electrical grounding must be verified with < 1 Ohm resistance to the main building earth.

Align the coupling using a laser alignment tool. Check for soft foot and ensure the motor shaft is centered relative to the pump casing. Tighten all bolts using a torque wrench following the cross-pattern sequence defined in Appendix B. Electrical grounding must be verified with < 1 Ohm resistance to the main building earth.

Align the coupling using a laser alignment tool. Check for soft foot and ensure the motor shaft is centered relative to the pump casing. Tighten all bolts using a torque wrench following the cross-pattern sequence defined in Appendix B. Electrical grounding must be verified with < 1 Ohm resistance to the main building earth.

Align the coupling using a laser alignment tool. Check for soft foot and ensure the motor shaft is centered relative to the pump casing. Tighten all bolts using a torque wrench following the cross-pattern sequence defined in Appendix B. Electrical grounding must be verified with < 1 Ohm resistance to the main building earth.

Align the coupling using a laser alignment tool. Check for soft foot and ensure the motor shaft is centered relative to the pump casing. Tighten all bolts using a torque wrench following the cross-pattern sequence defined in Appendix B. Electrical grounding must be verified with < 1 Ohm resistance to the main building earth.

Align the coupling using a laser alignment tool. Check for soft foot and ensure the motor shaft is centered relative to the pump casing. Tighten all bolts using a torque wrench following the cross-pattern sequence defined in Appendix B. Electrical grounding must be verified with < 1 Ohm resistance to the main building earth.

Align the coupling using a laser alignment tool. Check for soft foot and ensure the motor shaft is centered relative to the pump casing. Tighten all bolts using a torque wrench following the cross-pattern sequence defined in Appendix B. Electrical grounding must be verified with < 1

Ohm resistance to the main building earth.

Align the coupling using a laser alignment tool. Check for soft foot and ensure the motor shaft is centered relative to the pump casing. Tighten all bolts using a torque wrench following the cross-pattern sequence defined in Appendix B. Electrical grounding must be verified with < 1 Ohm resistance to the main building earth.

Align the coupling using a laser alignment tool. Check for soft foot and ensure the motor shaft is centered relative to the pump casing. Tighten all bolts using a torque wrench following the cross-pattern sequence defined in Appendix B. Electrical grounding must be verified with < 1 Ohm resistance to the main building earth.

Align the coupling using a laser alignment tool. Check for soft foot and ensure the motor shaft is centered relative to the pump casing. Tighten all bolts using a torque wrench following the cross-pattern sequence defined in Appendix B. Electrical grounding must be verified with < 1 Ohm resistance to the main building earth.

Align the coupling using a laser alignment tool. Check for soft foot and ensure the motor shaft is centered relative to the pump casing. Tighten all bolts using a torque wrench following the cross-pattern sequence defined in Appendix B. Electrical grounding must be verified with < 1 Ohm resistance to the main building earth.

Align the coupling using a laser alignment tool. Check for soft foot and ensure the motor shaft is centered relative to the pump casing. Tighten all bolts using a torque wrench following the cross-pattern sequence defined in Appendix B. Electrical grounding must be verified with < 1 Ohm resistance to the main building earth.

Align the coupling using a laser alignment tool. Check for soft foot and ensure the motor shaft is centered relative to the pump casing. Tighten all bolts using a torque wrench following the cross-pattern sequence defined in Appendix B. Electrical grounding must be verified with < 1 Ohm resistance to the main building earth.

Align the coupling using a laser alignment tool. Check for soft foot and ensure the motor shaft is centered relative to the pump casing. Tighten all bolts using a torque wrench following the cross-pattern sequence defined in Appendix B. Electrical grounding must be verified with < 1 Ohm resistance to the main building earth.

Align the coupling using a laser alignment tool. Check for soft foot and ensure the motor shaft is centered relative to the pump casing. Tighten all bolts using a torque wrench following the cross-pattern sequence defined in Appendix B. Electrical grounding must be verified with < 1 Ohm resistance to the main building earth.

Align the coupling using a laser alignment tool. Check for soft foot and ensure the motor shaft is centered relative to the pump casing. Tighten all bolts using a torque wrench following the cross-pattern sequence defined in Appendix B. Electrical grounding must be verified with < 1 Ohm resistance to the main building earth.

Align the coupling using a laser alignment tool. Check for soft foot and ensure the motor shaft is centered relative to the pump casing. Tighten all bolts using a torque wrench following the cross-pattern sequence defined in Appendix B. Electrical grounding must be verified with < 1 Ohm resistance to the main building earth.

Align the coupling using a laser alignment tool. Check for soft foot and ensure the motor shaft is centered relative to the pump casing. Tighten all bolts using a torque wrench following the cross-pattern sequence defined in Appendix B. Electrical grounding must be verified with < 1 Ohm resistance to the main building earth.

Align the coupling using a laser alignment tool. Check for soft foot and ensure the motor shaft is centered relative to the pump casing. Tighten all bolts using a torque wrench following the cross-pattern sequence defined in Appendix B. Electrical grounding must be verified with < 1 Ohm resistance to the main building earth.

Align the coupling using a laser alignment tool. Check for soft foot and ensure the motor shaft is centered relative to the pump casing. Tighten all bolts using a torque wrench following the cross-pattern sequence defined in Appendix B. Electrical grounding must be verified with < 1 Ohm resistance to the main building earth.

Align the coupling using a laser alignment tool. Check for soft foot and ensure the motor shaft is centered relative to the pump casing. Tighten all bolts using a torque wrench following the cross-pattern sequence defined in Appendix B. Electrical grounding must be verified with < 1 Ohm resistance to the main building earth.

Align the coupling using a laser alignment tool. Check for soft foot and ensure the motor shaft is centered relative to the pump casing. Tighten all bolts using a torque wrench following the cross-pattern sequence defined in Appendix B. Electrical grounding must be verified with < 1 Ohm resistance to the main building earth.

Align the coupling using a laser alignment tool. Check for soft foot and ensure the motor shaft is centered relative to the pump casing. Tighten all bolts using a torque wrench following the cross-pattern sequence defined in Appendix B. Electrical grounding must be verified with < 1 Ohm resistance to the main building earth.

Align the coupling using a laser alignment tool. Check for soft foot and ensure the motor shaft is centered relative to the pump casing. Tighten all bolts using a torque wrench following the cross-pattern sequence defined in Appendix B. Electrical grounding must be verified with < 1 Ohm resistance to the main building earth.

Align the coupling using a laser alignment tool. Check for soft foot and ensure the motor shaft is centered relative to the pump casing. Tighten all bolts using a torque wrench following the cross-pattern sequence defined in Appendix B. Electrical grounding must be verified with < 1 Ohm resistance to the main building earth.

Align the coupling using a laser alignment tool. Check for soft foot and ensure the motor shaft is centered relative to the pump casing. Tighten all bolts using a torque wrench following the cross-pattern sequence defined in Appendix B. Electrical grounding must be verified with < 1 Ohm resistance to the main building earth.

Align the coupling using a laser alignment tool. Check for soft foot and ensure the motor shaft is centered relative to the pump casing. Tighten all bolts using a torque wrench following the cross-pattern sequence defined in Appendix B. Electrical grounding must be verified with < 1 Ohm resistance to the main building earth.

Align the coupling using a laser alignment tool. Check for soft foot and ensure the motor shaft is centered relative to the pump casing. Tighten all bolts using a torque wrench following the cross-pattern sequence defined in Appendix B. Electrical grounding must be verified with < 1 Ohm resistance to the main building earth.

4. Operation and Control

Startup Sequence: 1) Open suction valve. 2) Prime the pump. 3) Verify cooling water flow. 4) Joggle the motor to check rotation direction. 5) Ramp up VFD to 50Hz over 60 seconds.

Monitoring phase: During the first 2 hours, monitor bearing temperature every 15 minutes. Stabilized temperature should not exceed 85°C. Discharge pressure must be between 38 and 42 bar for secondary cooling circuit models. Report any unusual audible noise immediately. Check for thermal expansion of discharge manifold and adjust support springs if piping stress exceeds 10kN.

Monitoring phase: During the first 2 hours, monitor bearing temperature every 15 minutes. Stabilized temperature should not exceed 85°C. Discharge pressure must be between 38 and 42 bar for secondary cooling circuit models. Report any unusual audible noise immediately. Check for thermal expansion of discharge manifold and adjust support springs if piping stress exceeds 10kN.

Monitoring phase: During the first 2 hours, monitor bearing temperature every 15 minutes. Stabilized temperature should not exceed 85°C. Discharge pressure must be between 38 and 42 bar for secondary cooling circuit models. Report any unusual audible noise immediately. Check for thermal expansion of discharge manifold and adjust support springs if piping stress exceeds 10kN.

Monitoring phase: During the first 2 hours, monitor bearing temperature every 15 minutes. Stabilized temperature should not exceed 85°C. Discharge pressure must be between 38 and 42 bar for secondary cooling circuit models. Report any unusual audible noise immediately. Check for thermal expansion of discharge manifold and adjust support springs if piping stress exceeds 10kN.

Monitoring phase: During the first 2 hours, monitor bearing temperature every 15 minutes. Stabilized temperature should not exceed 85°C. Discharge pressure must be between 38 and 42 bar for secondary cooling circuit models. Report any unusual audible noise immediately. Check for thermal expansion of discharge manifold and adjust support springs if piping stress exceeds 10kN.

Monitoring phase: During the first 2 hours, monitor bearing temperature every 15 minutes. Stabilized temperature should not exceed 85°C. Discharge pressure must be between 38 and 42 bar for secondary cooling circuit models. Report any unusual audible noise immediately. Check for thermal expansion of discharge manifold and adjust support springs if piping stress exceeds 10kN.

Monitoring phase: During the first 2 hours, monitor bearing temperature every 15 minutes. Stabilized temperature should not exceed 85°C. Discharge pressure must be between 38 and 42 bar for secondary cooling circuit models. Report any unusual audible noise immediately. Check for thermal expansion of discharge manifold and adjust support springs if piping stress exceeds 10kN.

Monitoring phase: During the first 2 hours, monitor bearing temperature every 15 minutes. Stabilized temperature should not exceed 85°C. Discharge pressure must be between 38 and 42 bar for secondary cooling circuit models. Report any unusual audible noise immediately. Check for thermal expansion of discharge manifold and adjust support springs if piping stress exceeds 10kN.

Monitoring phase: During the first 2 hours, monitor bearing temperature every 15 minutes. Stabilized temperature should not exceed 85°C. Discharge pressure must be between 38 and 42 bar for secondary cooling circuit models. Report any unusual audible noise immediately. Check for thermal expansion of discharge manifold and adjust support springs if piping stress exceeds 10kN.

Monitoring phase: During the first 2 hours, monitor bearing temperature every 15 minutes. Stabilized temperature should not exceed 85°C. Discharge pressure must be between 38 and 42 bar for secondary cooling circuit models. Report any unusual audible noise immediately. Check for thermal expansion of discharge manifold and adjust support springs if piping stress exceeds 10kN.

Monitoring phase: During the first 2 hours, monitor bearing temperature every 15 minutes. Stabilized temperature should not exceed 85°C. Discharge pressure must be between 38 and 42 bar for secondary cooling circuit models. Report any unusual audible noise immediately. Check for thermal expansion of discharge manifold and adjust support springs if piping stress exceeds 10kN.

Monitoring phase: During the first 2 hours, monitor bearing temperature every 15 minutes. Stabilized temperature should not exceed 85°C. Discharge pressure must be between 38 and 42 bar for secondary cooling circuit models. Report any unusual audible noise immediately. Check for thermal expansion of discharge manifold and adjust support springs if piping stress exceeds 10kN.

Monitoring phase: During the first 2 hours, monitor bearing temperature every 15 minutes. Stabilized temperature should not exceed 85°C. Discharge pressure must be between 38 and 42 bar for secondary cooling circuit models. Report any unusual audible noise immediately. Check for thermal expansion of discharge manifold and adjust support springs if piping stress exceeds 10kN.

Monitoring phase: During the first 2 hours, monitor bearing temperature every 15 minutes. Stabilized temperature should not exceed 85°C. Discharge pressure must be between 38 and 42 bar for secondary cooling circuit models. Report any unusual audible noise immediately. Check for thermal expansion of discharge manifold and adjust support springs if piping stress exceeds 10kN.

Monitoring phase: During the first 2 hours, monitor bearing temperature every 15 minutes. Stabilized temperature should not exceed 85°C. Discharge pressure must be between 38 and 42 bar for secondary cooling circuit models. Report any unusual audible noise immediately. Check for thermal expansion of discharge manifold and adjust support springs if piping stress exceeds 10kN.

Monitoring phase: During the first 2 hours, monitor bearing temperature every 15 minutes. Stabilized temperature should not exceed 85°C. Discharge pressure must be between 38 and 42 bar for secondary cooling circuit models. Report any unusual audible noise immediately. Check for thermal expansion of discharge manifold and adjust support springs if piping stress exceeds 10kN.

Monitoring phase: During the first 2 hours, monitor bearing temperature every 15 minutes. Stabilized temperature should not exceed 85°C. Discharge pressure must be between 38 and 42 bar for secondary cooling circuit models. Report any unusual audible noise immediately. Check for thermal expansion of discharge manifold and adjust support springs if piping stress exceeds 10kN.

Monitoring phase: During the first 2 hours, monitor bearing temperature every 15 minutes. Stabilized temperature should not exceed 85°C. Discharge pressure must be between 38 and 42 bar for secondary cooling circuit models. Report any unusual audible noise immediately. Check for thermal expansion of discharge manifold and adjust support springs if piping stress exceeds 10kN.

Monitoring phase: During the first 2 hours, monitor bearing temperature every 15 minutes. Stabilized temperature should not exceed 85°C. Discharge pressure must be between 38 and 42 bar for secondary cooling circuit models. Report any unusual audible noise immediately. Check for thermal expansion of discharge manifold and adjust support springs if piping stress exceeds 10kN.

Monitoring phase: During the first 2 hours, monitor bearing temperature every 15 minutes. Stabilized temperature should not exceed 85°C. Discharge pressure must be between 38 and 42 bar for secondary cooling circuit models. Report any unusual audible noise immediately. Check for thermal expansion of discharge manifold and adjust support springs if piping stress exceeds 10kN.

Monitoring phase: During the first 2 hours, monitor bearing temperature every 15 minutes. Stabilized temperature should not exceed 85°C. Discharge pressure must be between 38 and 42 bar for secondary cooling circuit models. Report any unusual audible noise immediately. Check for thermal expansion of discharge manifold and adjust support springs if piping stress exceeds 10kN.

Monitoring phase: During the first 2 hours, monitor bearing temperature every 15 minutes. Stabilized temperature should not exceed 85°C. Discharge pressure must be between 38 and 42 bar for secondary cooling circuit models. Report any unusual audible noise immediately. Check for thermal expansion of discharge manifold and adjust support springs if piping stress exceeds 10kN.

Monitoring phase: During the first 2 hours, monitor bearing temperature every 15 minutes. Stabilized temperature should not exceed 85°C. Discharge pressure must be between 38 and 42 bar for secondary cooling circuit models. Report any unusual audible noise immediately. Check for thermal expansion of discharge manifold and adjust support springs if piping stress exceeds 10kN.

Monitoring phase: During the first 2 hours, monitor bearing temperature every 15 minutes. Stabilized temperature should not exceed 85°C. Discharge pressure must be between 38 and 42 bar for secondary cooling circuit models. Report any unusual audible noise immediately. Check for thermal expansion of discharge manifold and adjust support springs if piping stress exceeds 10kN.

Monitoring phase: During the first 2 hours, monitor bearing temperature every 15 minutes. Stabilized temperature should not exceed 85°C. Discharge pressure must be between 38 and 42 bar for secondary cooling circuit models. Report any unusual audible noise immediately. Check for thermal expansion of discharge manifold and adjust support springs if piping stress exceeds 10kN.

Monitoring phase: During the first 2 hours, monitor bearing temperature every 15 minutes. Stabilized temperature should not exceed 85°C. Discharge pressure must be between 38 and 42 bar for secondary cooling circuit models. Report any unusual audible noise immediately. Check for thermal expansion of discharge manifold and adjust support springs if piping stress exceeds 10kN.

Monitoring phase: During the first 2 hours, monitor bearing temperature every 15 minutes. Stabilized temperature should not exceed 85°C. Discharge pressure must be between 38 and 42 bar for secondary cooling circuit models. Report any unusual audible noise immediately. Check for thermal expansion of discharge manifold and adjust support springs if piping stress exceeds 10kN.

Monitoring phase: During the first 2 hours, monitor bearing temperature every 15 minutes. Stabilized temperature should not exceed 85°C. Discharge pressure must be between 38 and 42 bar for secondary cooling circuit models. Report any unusual audible noise immediately. Check for thermal expansion of discharge manifold and adjust support springs if piping stress exceeds 10kN.

Monitoring phase: During the first 2 hours, monitor bearing temperature every 15 minutes. Stabilized temperature should not exceed 85°C. Discharge pressure must be between 38 and 42 bar for secondary cooling circuit models. Report any unusual audible noise immediately. Check for thermal expansion of discharge manifold and adjust support springs if piping stress exceeds 10kN.

Monitoring phase: During the first 2 hours, monitor bearing temperature every 15 minutes. Stabilized temperature should not exceed 85°C. Discharge pressure must be between 38 and 42 bar for secondary cooling circuit models. Report any unusual audible noise immediately. Check for thermal expansion of discharge manifold and adjust support springs if piping stress exceeds 10kN.

Monitoring phase: During the first 2 hours, monitor bearing temperature every 15 minutes. Stabilized temperature should not exceed 85°C. Discharge pressure must be between 38 and 42 bar for secondary cooling circuit models. Report any unusual audible noise immediately. Check for thermal expansion of discharge manifold and adjust support springs if piping stress exceeds 10kN.

Monitoring phase: During the first 2 hours, monitor bearing temperature every 15 minutes. Stabilized temperature should not exceed 85°C. Discharge pressure must be between 38 and 42 bar for secondary cooling circuit models. Report any unusual audible noise immediately. Check for thermal expansion of discharge manifold and adjust support springs if piping stress exceeds 10kN.

Monitoring phase: During the first 2 hours, monitor bearing temperature every 15 minutes. Stabilized temperature should not exceed 85°C. Discharge pressure must be between 38 and 42 bar for secondary cooling circuit models. Report any unusual audible noise immediately. Check for thermal expansion of discharge manifold and adjust support springs if piping stress exceeds 10kN.

Monitoring phase: During the first 2 hours, monitor bearing temperature every 15 minutes. Stabilized temperature should not exceed 85°C. Discharge pressure must be between 38 and 42 bar for secondary cooling circuit models. Report any unusual audible noise immediately. Check for thermal expansion of discharge manifold and adjust support springs if piping stress exceeds 10kN.

Monitoring phase: During the first 2 hours, monitor bearing temperature every 15 minutes. Stabilized temperature should not exceed 85°C. Discharge pressure must be between 38 and 42 bar for secondary cooling circuit models. Report any unusual audible noise immediately. Check for thermal expansion of discharge manifold and adjust support springs if piping stress exceeds 10kN.

Monitoring phase: During the first 2 hours, monitor bearing temperature every 15 minutes. Stabilized temperature should not exceed 85°C. Discharge pressure must be between 38 and 42 bar for secondary cooling circuit models. Report any unusual audible noise immediately. Check for thermal expansion of discharge manifold and adjust support springs if piping stress exceeds 10kN.

Monitoring phase: During the first 2 hours, monitor bearing temperature every 15 minutes. Stabilized temperature should not exceed 85°C. Discharge pressure must be between 38 and 42 bar for secondary cooling circuit models. Report any unusual audible noise immediately. Check for thermal expansion of discharge manifold and adjust support springs if piping stress exceeds 10kN.

Monitoring phase: During the first 2 hours, monitor bearing temperature every 15 minutes. Stabilized temperature should not exceed 85°C. Discharge pressure must be between 38 and 42 bar for secondary cooling circuit models. Report any unusual audible noise immediately. Check for thermal expansion of discharge manifold and adjust support springs if piping stress exceeds 10kN.

Monitoring phase: During the first 2 hours, monitor bearing temperature every 15 minutes. Stabilized temperature should not exceed 85°C. Discharge pressure must be between 38 and 42 bar for secondary cooling circuit models. Report any unusual audible noise immediately. Check for thermal expansion of discharge manifold and adjust support springs if piping stress exceeds 10kN.

Monitoring phase: During the first 2 hours, monitor bearing temperature every 15 minutes. Stabilized temperature should not exceed 85°C. Discharge pressure must be between 38 and 42 bar for secondary cooling circuit models. Report any unusual audible noise immediately. Check for thermal expansion of discharge manifold and adjust support springs if piping stress exceeds 10kN.

Monitoring phase: During the first 2 hours, monitor bearing temperature every 15 minutes. Stabilized temperature should not exceed 85°C. Discharge pressure must be between 38 and 42 bar for secondary cooling circuit models. Report any unusual audible noise immediately. Check for thermal expansion of discharge manifold and adjust support springs if piping stress exceeds 10kN.

Monitoring phase: During the first 2 hours, monitor bearing temperature every 15 minutes. Stabilized temperature should not exceed 85°C. Discharge pressure must be between 38 and 42 bar for secondary cooling circuit models. Report any unusual audible noise immediately. Check for thermal expansion of discharge manifold and adjust support springs if piping stress exceeds 10kN.

Monitoring phase: During the first 2 hours, monitor bearing temperature every 15 minutes. Stabilized temperature should not exceed 85°C. Discharge pressure must be between 38 and 42 bar for secondary cooling circuit models. Report any unusual audible noise immediately. Check for thermal expansion of discharge manifold and adjust support springs if piping stress exceeds 10kN.

Monitoring phase: During the first 2 hours, monitor bearing temperature every 15 minutes. Stabilized temperature should not exceed 85°C. Discharge pressure must be between 38 and 42 bar for secondary cooling circuit models. Report any unusual audible noise immediately. Check for thermal expansion of discharge manifold and adjust support springs if piping stress exceeds 10kN.

Monitoring phase: During the first 2 hours, monitor bearing temperature every 15 minutes. Stabilized temperature should not exceed 85°C. Discharge pressure must be between 38 and 42 bar for secondary cooling circuit models. Report any unusual audible noise immediately. Check for thermal expansion of discharge manifold and adjust support springs if piping stress exceeds 10kN.

Monitoring phase: During the first 2 hours, monitor bearing temperature every 15 minutes. Stabilized temperature should not exceed 85°C. Discharge pressure must be between 38 and 42 bar for secondary cooling circuit models. Report any unusual audible noise immediately. Check for thermal expansion of discharge manifold and adjust support springs if piping stress exceeds 10kN.

Monitoring phase: During the first 2 hours, monitor bearing temperature every 15 minutes. Stabilized temperature should not exceed 85°C. Discharge pressure must be between 38 and 42 bar for secondary cooling circuit models. Report any unusual audible noise immediately. Check for thermal expansion of discharge manifold and adjust support springs if piping stress exceeds 10kN.

Monitoring phase: During the first 2 hours, monitor bearing temperature every 15 minutes. Stabilized temperature should not exceed 85°C. Discharge pressure must be between 38 and 42 bar for secondary cooling circuit models. Report any unusual audible noise immediately. Check for thermal expansion of discharge manifold and adjust support springs if piping stress exceeds 10kN.

Monitoring phase: During the first 2 hours, monitor bearing temperature every 15 minutes. Stabilized temperature should not exceed 85°C. Discharge pressure must be between 38 and 42 bar for secondary cooling circuit models. Report any unusual audible noise immediately. Check for thermal expansion of discharge manifold and adjust support springs if piping stress exceeds 10kN.

Monitoring phase: During the first 2 hours, monitor bearing temperature every 15 minutes. Stabilized temperature should not exceed 85°C. Discharge pressure must be between 38 and 42 bar for secondary cooling circuit models. Report any unusual audible noise immediately. Check for thermal expansion of discharge manifold and adjust support springs if piping stress exceeds 10kN.

Monitoring phase: During the first 2 hours, monitor bearing temperature every 15 minutes. Stabilized temperature should not exceed 85°C. Discharge pressure must be between 38 and 42 bar for secondary cooling circuit models. Report any unusual audible noise immediately. Check for thermal expansion of discharge manifold and adjust support springs if piping stress exceeds 10kN.

Monitoring phase: During the first 2 hours, monitor bearing temperature every 15 minutes. Stabilized temperature should not exceed 85°C. Discharge pressure must be between 38 and 42 bar for secondary cooling circuit models. Report any unusual audible noise immediately. Check for thermal expansion of discharge manifold and adjust support springs if piping stress exceeds 10kN.

Monitoring phase: During the first 2 hours, monitor bearing temperature every 15 minutes. Stabilized temperature should not exceed 85°C. Discharge pressure must be between 38 and 42 bar for secondary cooling circuit models. Report any unusual audible noise immediately. Check for thermal expansion of discharge manifold and adjust support springs if piping stress exceeds 10kN.

Monitoring phase: During the first 2 hours, monitor bearing temperature every 15 minutes. Stabilized temperature should not exceed 85°C. Discharge pressure must be between 38 and 42 bar for secondary cooling circuit models. Report any unusual audible noise immediately. Check for thermal expansion of discharge manifold and adjust support springs if piping stress exceeds 10kN.

Monitoring phase: During the first 2 hours, monitor bearing temperature every 15 minutes. Stabilized temperature should not exceed 85°C. Discharge pressure must be between 38 and 42 bar for secondary cooling circuit models. Report any unusual audible noise immediately. Check for thermal expansion of discharge manifold and adjust support springs if piping stress exceeds 10kN.

Monitoring phase: During the first 2 hours, monitor bearing temperature every 15 minutes. Stabilized temperature should not exceed 85°C. Discharge pressure must be between 38 and 42 bar for secondary cooling circuit models. Report any unusual audible noise immediately. Check for thermal expansion of discharge manifold and adjust support springs if piping stress exceeds 10kN.

Monitoring phase: During the first 2 hours, monitor bearing temperature every 15 minutes. Stabilized temperature should not exceed 85°C. Discharge pressure must be between 38 and 42 bar for secondary cooling circuit models. Report any unusual audible noise immediately. Check for thermal expansion of discharge manifold and adjust support springs if piping stress exceeds 10kN.

Monitoring phase: During the first 2 hours, monitor bearing temperature every 15 minutes. Stabilized temperature should not exceed 85°C. Discharge pressure must be between 38 and 42 bar for secondary cooling circuit models. Report any unusual audible noise immediately. Check for thermal expansion of discharge manifold and adjust support springs if piping stress exceeds 10kN.

Monitoring phase: During the first 2 hours, monitor bearing temperature every 15 minutes. Stabilized temperature should not exceed 85°C. Discharge pressure must be between 38 and 42 bar for secondary cooling circuit models. Report any unusual audible noise immediately. Check for thermal expansion of discharge manifold and adjust support springs if piping stress exceeds 10kN.

Monitoring phase: During the first 2 hours, monitor bearing temperature every 15 minutes. Stabilized temperature should not exceed 85°C. Discharge pressure must be between 38 and 42 bar for secondary cooling circuit models. Report any unusual audible noise immediately. Check for thermal expansion of discharge manifold and adjust support springs if piping stress exceeds 10kN.

Monitoring phase: During the first 2 hours, monitor bearing temperature every 15 minutes. Stabilized temperature should not exceed 85°C. Discharge pressure must be between 38 and 42 bar for secondary cooling circuit models. Report any unusual audible noise immediately. Check for thermal expansion of discharge manifold and adjust support springs if piping stress exceeds 10kN.

5. Telemetry & Sensor Integration

The Zynaptrix-9000 is equipped with a Digital Twin sensor array. These sensors feed data directly to the AI Copilot Orchestrator for real-time anomaly detection and prescriptive diagnostics.

Figure 5.1: Integrated Sensor Array Mapping

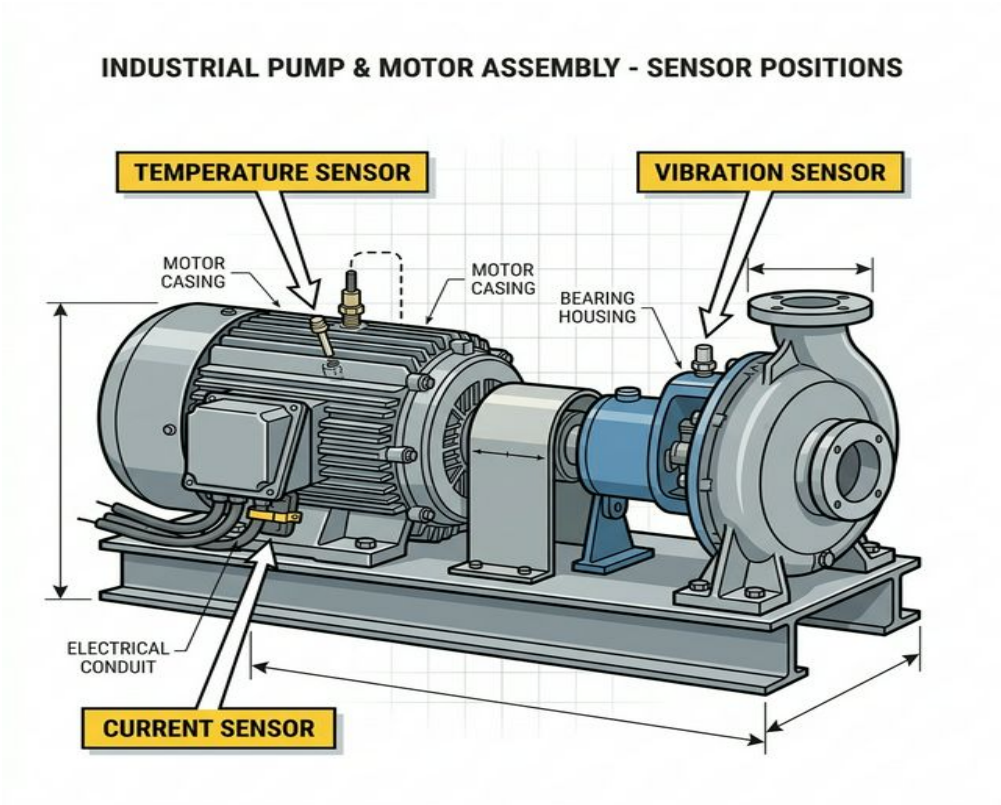

ID	Sensor Type	Location	Normal Range	Critical Threshold
T-101	Thermocouple	Motor Stator	40-190°C	>210°C
V-202	Accelerometer	DE Bearing	1.2-4.5 mm/s	>8.0 mm/s
C-303	Current Trans.	Bus Phase A	0-10A (Normal)	>12A (Lock Rotor)
P-404	Pressure Trans.	Discharge Port	35-45 bar	<25 bar

Communication Protocol: Sensors utilize Modbus TCP/IP. Data polling frequency is 1 Hz. The Anomaly Detection Service calculates Reconstruction MSE based on these four features. A threshold of 0.05 indicates normal operation, while >0.5 suggests imminent failure or sensor malfunction. High-frequency vibration alerts are multiplexed via the MQTT bus for low-latency diagnostic processing.

Communication Protocol: Sensors utilize Modbus TCP/IP. Data polling frequency is 1 Hz. The Anomaly Detection Service calculates Reconstruction MSE based on these four features. A threshold of 0.05 indicates normal operation, while >0.5 suggests imminent failure or sensor malfunction. High-frequency vibration alerts are multiplexed via the MQTT bus for low-latency

diagnostic processing.

Communication Protocol: Sensors utilize Modbus TCP/IP. Data polling frequency is 1 Hz. The Anomaly Detection Service calculates Reconstruction MSE based on these four features. A threshold of 0.05 indicates normal operation, while >0.5 suggests imminent failure or sensor malfunction. High-frequency vibration alerts are multiplexed via the MQTT bus for low-latency diagnostic processing.

Communication Protocol: Sensors utilize Modbus TCP/IP. Data polling frequency is 1 Hz. The Anomaly Detection Service calculates Reconstruction MSE based on these four features. A threshold of 0.05 indicates normal operation, while >0.5 suggests imminent failure or sensor malfunction. High-frequency vibration alerts are multiplexed via the MQTT bus for low-latency diagnostic processing.

Communication Protocol: Sensors utilize Modbus TCP/IP. Data polling frequency is 1 Hz. The Anomaly Detection Service calculates Reconstruction MSE based on these four features. A threshold of 0.05 indicates normal operation, while >0.5 suggests imminent failure or sensor malfunction. High-frequency vibration alerts are multiplexed via the MQTT bus for low-latency diagnostic processing.

Communication Protocol: Sensors utilize Modbus TCP/IP. Data polling frequency is 1 Hz. The Anomaly Detection Service calculates Reconstruction MSE based on these four features. A threshold of 0.05 indicates normal operation, while >0.5 suggests imminent failure or sensor malfunction. High-frequency vibration alerts are multiplexed via the MQTT bus for low-latency diagnostic processing.

Communication Protocol: Sensors utilize Modbus TCP/IP. Data polling frequency is 1 Hz. The Anomaly Detection Service calculates Reconstruction MSE based on these four features. A threshold of 0.05 indicates normal operation, while >0.5 suggests imminent failure or sensor malfunction. High-frequency vibration alerts are multiplexed via the MQTT bus for low-latency diagnostic processing.

Communication Protocol: Sensors utilize Modbus TCP/IP. Data polling frequency is 1 Hz. The Anomaly Detection Service calculates Reconstruction MSE based on these four features. A threshold of 0.05 indicates normal operation, while >0.5 suggests imminent failure or sensor malfunction. High-frequency vibration alerts are multiplexed via the MQTT bus for low-latency diagnostic processing.

Communication Protocol: Sensors utilize Modbus TCP/IP. Data polling frequency is 1 Hz. The Anomaly Detection Service calculates Reconstruction MSE based on these four features. A threshold of 0.05 indicates normal operation, while >0.5 suggests imminent failure or sensor malfunction. High-frequency vibration alerts are multiplexed via the MQTT bus for low-latency diagnostic processing.

Communication Protocol: Sensors utilize Modbus TCP/IP. Data polling frequency is 1 Hz. The Anomaly Detection Service calculates Reconstruction MSE based on these four features. A threshold of 0.05 indicates normal operation, while >0.5 suggests imminent failure or sensor malfunction. High-frequency vibration alerts are multiplexed via the MQTT bus for low-latency diagnostic processing.

Communication Protocol: Sensors utilize Modbus TCP/IP. Data polling frequency is 1 Hz. The Anomaly Detection Service calculates Reconstruction MSE based on these four features. A threshold of 0.05 indicates normal operation, while >0.5 suggests imminent failure or sensor

malfunction. High-frequency vibration alerts are multiplexed via the MQTT bus for low-latency diagnostic processing.

Communication Protocol: Sensors utilize Modbus TCP/IP. Data polling frequency is 1 Hz. The Anomaly Detection Service calculates Reconstruction MSE based on these four features. A threshold of 0.05 indicates normal operation, while >0.5 suggests imminent failure or sensor malfunction. High-frequency vibration alerts are multiplexed via the MQTT bus for low-latency diagnostic processing.

Communication Protocol: Sensors utilize Modbus TCP/IP. Data polling frequency is 1 Hz. The Anomaly Detection Service calculates Reconstruction MSE based on these four features. A threshold of 0.05 indicates normal operation, while >0.5 suggests imminent failure or sensor malfunction. High-frequency vibration alerts are multiplexed via the MQTT bus for low-latency diagnostic processing.

Communication Protocol: Sensors utilize Modbus TCP/IP. Data polling frequency is 1 Hz. The Anomaly Detection Service calculates Reconstruction MSE based on these four features. A threshold of 0.05 indicates normal operation, while >0.5 suggests imminent failure or sensor malfunction. High-frequency vibration alerts are multiplexed via the MQTT bus for low-latency diagnostic processing.

Communication Protocol: Sensors utilize Modbus TCP/IP. Data polling frequency is 1 Hz. The Anomaly Detection Service calculates Reconstruction MSE based on these four features. A threshold of 0.05 indicates normal operation, while >0.5 suggests imminent failure or sensor malfunction. High-frequency vibration alerts are multiplexed via the MQTT bus for low-latency diagnostic processing.

Communication Protocol: Sensors utilize Modbus TCP/IP. Data polling frequency is 1 Hz. The Anomaly Detection Service calculates Reconstruction MSE based on these four features. A threshold of 0.05 indicates normal operation, while >0.5 suggests imminent failure or sensor malfunction. High-frequency vibration alerts are multiplexed via the MQTT bus for low-latency diagnostic processing.

Communication Protocol: Sensors utilize Modbus TCP/IP. Data polling frequency is 1 Hz. The Anomaly Detection Service calculates Reconstruction MSE based on these four features. A threshold of 0.05 indicates normal operation, while >0.5 suggests imminent failure or sensor malfunction. High-frequency vibration alerts are multiplexed via the MQTT bus for low-latency diagnostic processing.

Communication Protocol: Sensors utilize Modbus TCP/IP. Data polling frequency is 1 Hz. The Anomaly Detection Service calculates Reconstruction MSE based on these four features. A threshold of 0.05 indicates normal operation, while >0.5 suggests imminent failure or sensor malfunction. High-frequency vibration alerts are multiplexed via the MQTT bus for low-latency diagnostic processing.

Communication Protocol: Sensors utilize Modbus TCP/IP. Data polling frequency is 1 Hz. The Anomaly Detection Service calculates Reconstruction MSE based on these four features. A threshold of 0.05 indicates normal operation, while >0.5 suggests imminent failure or sensor malfunction. High-frequency vibration alerts are multiplexed via the MQTT bus for low-latency diagnostic processing.

Communication Protocol: Sensors utilize Modbus TCP/IP. Data polling frequency is 1 Hz. The Anomaly Detection Service calculates Reconstruction MSE based on these four features. A threshold of 0.05 indicates normal operation, while >0.5 suggests imminent failure or sensor malfunction. High-frequency vibration alerts are multiplexed via the MQTT bus for low-latency diagnostic processing.

Communication Protocol: Sensors utilize Modbus TCP/IP. Data polling frequency is 1 Hz. The Anomaly Detection Service calculates Reconstruction MSE based on these four features. A

threshold of 0.05 indicates normal operation, while >0.5 suggests imminent failure or sensor malfunction. High-frequency vibration alerts are multiplexed via the MQTT bus for low-latency diagnostic processing.

Communication Protocol: Sensors utilize Modbus TCP/IP. Data polling frequency is 1 Hz. The Anomaly Detection Service calculates Reconstruction MSE based on these four features. A threshold of 0.05 indicates normal operation, while >0.5 suggests imminent failure or sensor malfunction. High-frequency vibration alerts are multiplexed via the MQTT bus for low-latency diagnostic processing.

Communication Protocol: Sensors utilize Modbus TCP/IP. Data polling frequency is 1 Hz. The Anomaly Detection Service calculates Reconstruction MSE based on these four features. A threshold of 0.05 indicates normal operation, while >0.5 suggests imminent failure or sensor malfunction. High-frequency vibration alerts are multiplexed via the MQTT bus for low-latency diagnostic processing.

Communication Protocol: Sensors utilize Modbus TCP/IP. Data polling frequency is 1 Hz. The Anomaly Detection Service calculates Reconstruction MSE based on these four features. A threshold of 0.05 indicates normal operation, while >0.5 suggests imminent failure or sensor malfunction. High-frequency vibration alerts are multiplexed via the MQTT bus for low-latency diagnostic processing.

Communication Protocol: Sensors utilize Modbus TCP/IP. Data polling frequency is 1 Hz. The Anomaly Detection Service calculates Reconstruction MSE based on these four features. A threshold of 0.05 indicates normal operation, while >0.5 suggests imminent failure or sensor malfunction. High-frequency vibration alerts are multiplexed via the MQTT bus for low-latency diagnostic processing.

Communication Protocol: Sensors utilize Modbus TCP/IP. Data polling frequency is 1 Hz. The Anomaly Detection Service calculates Reconstruction MSE based on these four features. A threshold of 0.05 indicates normal operation, while >0.5 suggests imminent failure or sensor malfunction. High-frequency vibration alerts are multiplexed via the MQTT bus for low-latency diagnostic processing.

Communication Protocol: Sensors utilize Modbus TCP/IP. Data polling frequency is 1 Hz. The Anomaly Detection Service calculates Reconstruction MSE based on these four features. A threshold of 0.05 indicates normal operation, while >0.5 suggests imminent failure or sensor malfunction. High-frequency vibration alerts are multiplexed via the MQTT bus for low-latency diagnostic processing.

Communication Protocol: Sensors utilize Modbus TCP/IP. Data polling frequency is 1 Hz. The Anomaly Detection Service calculates Reconstruction MSE based on these four features. A threshold of 0.05 indicates normal operation, while >0.5 suggests imminent failure or sensor malfunction. High-frequency vibration alerts are multiplexed via the MQTT bus for low-latency diagnostic processing.

Communication Protocol: Sensors utilize Modbus TCP/IP. Data polling frequency is 1 Hz. The Anomaly Detection Service calculates Reconstruction MSE based on these four features. A threshold of 0.05 indicates normal operation, while >0.5 suggests imminent failure or sensor malfunction. High-frequency vibration alerts are multiplexed via the MQTT bus for low-latency diagnostic processing.

Communication Protocol: Sensors utilize Modbus TCP/IP. Data polling frequency is 1 Hz. The Anomaly Detection Service calculates Reconstruction MSE based on these four features. A threshold of 0.05 indicates normal operation, while >0.5 suggests imminent failure or sensor malfunction. High-frequency vibration alerts are multiplexed via the MQTT bus for low-latency diagnostic processing.

Communication Protocol: Sensors utilize Modbus TCP/IP. Data polling frequency is 1 Hz. The Anomaly Detection Service calculates Reconstruction MSE based on these four features. A threshold of 0.05 indicates normal operation, while >0.5 suggests imminent failure or sensor malfunction. High-frequency vibration alerts are multiplexed via the MQTT bus for low-latency diagnostic processing.

Communication Protocol: Sensors utilize Modbus TCP/IP. Data polling frequency is 1 Hz. The Anomaly Detection Service calculates Reconstruction MSE based on these four features. A threshold of 0.05 indicates normal operation, while >0.5 suggests imminent failure or sensor malfunction. High-frequency vibration alerts are multiplexed via the MQTT bus for low-latency diagnostic processing.

Communication Protocol: Sensors utilize Modbus TCP/IP. Data polling frequency is 1 Hz. The Anomaly Detection Service calculates Reconstruction MSE based on these four features. A threshold of 0.05 indicates normal operation, while >0.5 suggests imminent failure or sensor malfunction. High-frequency vibration alerts are multiplexed via the MQTT bus for low-latency diagnostic processing.

Communication Protocol: Sensors utilize Modbus TCP/IP. Data polling frequency is 1 Hz. The Anomaly Detection Service calculates Reconstruction MSE based on these four features. A threshold of 0.05 indicates normal operation, while >0.5 suggests imminent failure or sensor malfunction. High-frequency vibration alerts are multiplexed via the MQTT bus for low-latency diagnostic processing.

Communication Protocol: Sensors utilize Modbus TCP/IP. Data polling frequency is 1 Hz. The Anomaly Detection Service calculates Reconstruction MSE based on these four features. A threshold of 0.05 indicates normal operation, while >0.5 suggests imminent failure or sensor malfunction. High-frequency vibration alerts are multiplexed via the MQTT bus for low-latency diagnostic processing.

Communication Protocol: Sensors utilize Modbus TCP/IP. Data polling frequency is 1 Hz. The Anomaly Detection Service calculates Reconstruction MSE based on these four features. A threshold of 0.05 indicates normal operation, while >0.5 suggests imminent failure or sensor malfunction. High-frequency vibration alerts are multiplexed via the MQTT bus for low-latency diagnostic processing.

Communication Protocol: Sensors utilize Modbus TCP/IP. Data polling frequency is 1 Hz. The Anomaly Detection Service calculates Reconstruction MSE based on these four features. A threshold of 0.05 indicates normal operation, while >0.5 suggests imminent failure or sensor malfunction. High-frequency vibration alerts are multiplexed via the MQTT bus for low-latency diagnostic processing.

Communication Protocol: Sensors utilize Modbus TCP/IP. Data polling frequency is 1 Hz. The Anomaly Detection Service calculates Reconstruction MSE based on these four features. A threshold of 0.05 indicates normal operation, while >0.5 suggests imminent failure or sensor malfunction. High-frequency vibration alerts are multiplexed via the MQTT bus for low-latency diagnostic processing.

Communication Protocol: Sensors utilize Modbus TCP/IP. Data polling frequency is 1 Hz. The Anomaly Detection Service calculates Reconstruction MSE based on these four features. A threshold of 0.05 indicates normal operation, while >0.5 suggests imminent failure or sensor malfunction. High-frequency vibration alerts are multiplexed via the MQTT bus for low-latency diagnostic processing.

Communication Protocol: Sensors utilize Modbus TCP/IP. Data polling frequency is 1 Hz. The Anomaly Detection Service calculates Reconstruction MSE based on these four features. A threshold of 0.05 indicates normal operation, while >0.5 suggests imminent failure or sensor malfunction. High-frequency vibration alerts are multiplexed via the MQTT bus for low-latency diagnostic processing.

Communication Protocol: Sensors utilize Modbus TCP/IP. Data polling frequency is 1 Hz. The Anomaly Detection Service calculates Reconstruction MSE based on these four features. A threshold of 0.05 indicates normal operation, while >0.5 suggests imminent failure or sensor malfunction. High-frequency vibration alerts are multiplexed via the MQTT bus for low-latency diagnostic processing.

Communication Protocol: Sensors utilize Modbus TCP/IP. Data polling frequency is 1 Hz. The Anomaly Detection Service calculates Reconstruction MSE based on these four features. A threshold of 0.05 indicates normal operation, while >0.5 suggests imminent failure or sensor malfunction. High-frequency vibration alerts are multiplexed via the MQTT bus for low-latency diagnostic processing.

Communication Protocol: Sensors utilize Modbus TCP/IP. Data polling frequency is 1 Hz. The Anomaly Detection Service calculates Reconstruction MSE based on these four features. A threshold of 0.05 indicates normal operation, while >0.5 suggests imminent failure or sensor malfunction. High-frequency vibration alerts are multiplexed via the MQTT bus for low-latency diagnostic processing.

Communication Protocol: Sensors utilize Modbus TCP/IP. Data polling frequency is 1 Hz. The Anomaly Detection Service calculates Reconstruction MSE based on these four features. A threshold of 0.05 indicates normal operation, while >0.5 suggests imminent failure or sensor malfunction. High-frequency vibration alerts are multiplexed via the MQTT bus for low-latency diagnostic processing.

Communication Protocol: Sensors utilize Modbus TCP/IP. Data polling frequency is 1 Hz. The Anomaly Detection Service calculates Reconstruction MSE based on these four features. A threshold of 0.05 indicates normal operation, while >0.5 suggests imminent failure or sensor malfunction. High-frequency vibration alerts are multiplexed via the MQTT bus for low-latency diagnostic processing.

Communication Protocol: Sensors utilize Modbus TCP/IP. Data polling frequency is 1 Hz. The Anomaly Detection Service calculates Reconstruction MSE based on these four features. A threshold of 0.05 indicates normal operation, while >0.5 suggests imminent failure or sensor malfunction. High-frequency vibration alerts are multiplexed via the MQTT bus for low-latency diagnostic processing.

Communication Protocol: Sensors utilize Modbus TCP/IP. Data polling frequency is 1 Hz. The Anomaly Detection Service calculates Reconstruction MSE based on these four features. A threshold of 0.05 indicates normal operation, while >0.5 suggests imminent failure or sensor malfunction. High-frequency vibration alerts are multiplexed via the MQTT bus for low-latency diagnostic processing.

Communication Protocol: Sensors utilize Modbus TCP/IP. Data polling frequency is 1 Hz. The Anomaly Detection Service calculates Reconstruction MSE based on these four features. A threshold of 0.05 indicates normal operation, while >0.5 suggests imminent failure or sensor malfunction. High-frequency vibration alerts are multiplexed via the MQTT bus for low-latency diagnostic processing.

Communication Protocol: Sensors utilize Modbus TCP/IP. Data polling frequency is 1 Hz. The Anomaly Detection Service calculates Reconstruction MSE based on these four features. A threshold of 0.05 indicates normal operation, while >0.5 suggests imminent failure or sensor malfunction. High-frequency vibration alerts are multiplexed via the MQTT bus for low-latency diagnostic processing.

Communication Protocol: Sensors utilize Modbus TCP/IP. Data polling frequency is 1 Hz. The Anomaly Detection Service calculates Reconstruction MSE based on these four features. A threshold of 0.05 indicates normal operation, while >0.5 suggests imminent failure or sensor malfunction. High-frequency vibration alerts are multiplexed via the MQTT bus for low-latency diagnostic processing.

Communication Protocol: Sensors utilize Modbus TCP/IP. Data polling frequency is 1 Hz. The Anomaly Detection Service calculates Reconstruction MSE based on these four features. A threshold of 0.05 indicates normal operation, while >0.5 suggests imminent failure or sensor malfunction. High-frequency vibration alerts are multiplexed via the MQTT bus for low-latency diagnostic processing.

Communication Protocol: Sensors utilize Modbus TCP/IP. Data polling frequency is 1 Hz. The Anomaly Detection Service calculates Reconstruction MSE based on these four features. A threshold of 0.05 indicates normal operation, while >0.5 suggests imminent failure or sensor malfunction. High-frequency vibration alerts are multiplexed via the MQTT bus for low-latency diagnostic processing.

Communication Protocol: Sensors utilize Modbus TCP/IP. Data polling frequency is 1 Hz. The Anomaly Detection Service calculates Reconstruction MSE based on these four features. A threshold of 0.05 indicates normal operation, while >0.5 suggests imminent failure or sensor malfunction. High-frequency vibration alerts are multiplexed via the MQTT bus for low-latency diagnostic processing.

Communication Protocol: Sensors utilize Modbus TCP/IP. Data polling frequency is 1 Hz. The Anomaly Detection Service calculates Reconstruction MSE based on these four features. A threshold of 0.05 indicates normal operation, while >0.5 suggests imminent failure or sensor malfunction. High-frequency vibration alerts are multiplexed via the MQTT bus for low-latency diagnostic processing.

Communication Protocol: Sensors utilize Modbus TCP/IP. Data polling frequency is 1 Hz. The Anomaly Detection Service calculates Reconstruction MSE based on these four features. A threshold of 0.05 indicates normal operation, while >0.5 suggests imminent failure or sensor malfunction. High-frequency vibration alerts are multiplexed via the MQTT bus for low-latency diagnostic processing.

Communication Protocol: Sensors utilize Modbus TCP/IP. Data polling frequency is 1 Hz. The Anomaly Detection Service calculates Reconstruction MSE based on these four features. A threshold of 0.05 indicates normal operation, while >0.5 suggests imminent failure or sensor malfunction. High-frequency vibration alerts are multiplexed via the MQTT bus for low-latency diagnostic processing.

Communication Protocol: Sensors utilize Modbus TCP/IP. Data polling frequency is 1 Hz. The Anomaly Detection Service calculates Reconstruction MSE based on these four features. A threshold of 0.05 indicates normal operation, while >0.5 suggests imminent failure or sensor malfunction. High-frequency vibration alerts are multiplexed via the MQTT bus for low-latency diagnostic processing.

7.0 Diagnostic Guide - Advanced Analysis

Case Study Analysis: In recent field deployments, instances of 'Machine Warning' were successfully remediated by adjusting the impeller clearance by 0.5mm. When temperature sensors (T-101) deviate by more than 15% from the moving average, the Anomaly Service triggers an alert. Prescriptive actions include immediate inspection of cooling fans and validation of lubricant viscosity.

Observation	Root Cause	Action
Static Temp	Probe Frozen	Replace T-101
Humming Noise	Cavitation	Check Discharge
High Current	Motor Stalled	Emergency Stop

Detailed technical breakdown of thermal-dynamic flux within the pump chamber. The heat dissipation coefficient (HDC) must remain above 0.75 for peak performance. If HDC drops, check for scale buildup on internal heat exchange fins. This ensures that the motor current remains within the safe 450kW envelope and prevents stator winding insulation degradation.

Detailed technical breakdown of thermal-dynamic flux within the pump chamber. The heat dissipation coefficient (HDC) must remain above 0.75 for peak performance. If HDC drops, check for scale buildup on internal heat exchange fins. This ensures that the motor current remains within the safe 450kW envelope and prevents stator winding insulation degradation.

Detailed technical breakdown of thermal-dynamic flux within the pump chamber. The heat dissipation coefficient (HDC) must remain above 0.75 for peak performance. If HDC drops, check for scale buildup on internal heat exchange fins. This ensures that the motor current remains within the safe 450kW envelope and prevents stator winding insulation degradation.

Detailed technical breakdown of thermal-dynamic flux within the pump chamber. The heat dissipation coefficient (HDC) must remain above 0.75 for peak performance. If HDC drops, check for scale buildup on internal heat exchange fins. This ensures that the motor current remains within the safe 450kW envelope and prevents stator winding insulation degradation.

Detailed technical breakdown of thermal-dynamic flux within the pump chamber. The heat dissipation coefficient (HDC) must remain above 0.75 for peak performance. If HDC drops, check for scale buildup on internal heat exchange fins. This ensures that the motor current remains within the safe 450kW envelope and prevents stator winding insulation degradation.

Detailed technical breakdown of thermal-dynamic flux within the pump chamber. The heat dissipation coefficient (HDC) must remain above 0.75 for peak performance. If HDC drops, check for scale buildup on internal heat exchange fins. This ensures that the motor current remains within the safe 450kW envelope and prevents stator winding insulation degradation.

Detailed technical breakdown of thermal-dynamic flux within the pump chamber. The heat dissipation coefficient (HDC) must remain above 0.75 for peak performance. If HDC drops, check for scale buildup on internal heat exchange fins. This ensures that the motor current

remains within the safe 450kW envelope and prevents stator winding insulation degradation.

Detailed technical breakdown of thermal-dynamic flux within the pump chamber. The heat dissipation coefficient (HDC) must remain above 0.75 for peak performance. If HDC drops, check for scale buildup on internal heat exchange fins. This ensures that the motor current remains within the safe 450kW envelope and prevents stator winding insulation degradation.

7.1 Diagnostic Guide - Advanced Analysis

Case Study Analysis: In recent field deployments, instances of 'Machine Warning' were successfully remediated by adjusting the impeller clearance by 0.5mm. When temperature sensors (T-101) deviate by more than 15% from the moving average, the Anomaly Service triggers an alert. Prescriptive actions include immediate inspection of cooling fans and validation of lubricant viscosity.

Observation	Root Cause	Action
Static Temp	Probe Frozen	Replace T-101
Humming Noise	Cavitation	Check Discharge
High Current	Motor Stalled	Emergency Stop

Detailed technical breakdown of thermal-dynamic flux within the pump chamber. The heat dissipation coefficient (HDC) must remain above 0.75 for peak performance. If HDC drops, check for scale buildup on internal heat exchange fins. This ensures that the motor current remains within the safe 450kW envelope and prevents stator winding insulation degradation.

Detailed technical breakdown of thermal-dynamic flux within the pump chamber. The heat dissipation coefficient (HDC) must remain above 0.75 for peak performance. If HDC drops, check for scale buildup on internal heat exchange fins. This ensures that the motor current remains within the safe 450kW envelope and prevents stator winding insulation degradation.

Detailed technical breakdown of thermal-dynamic flux within the pump chamber. The heat dissipation coefficient (HDC) must remain above 0.75 for peak performance. If HDC drops, check for scale buildup on internal heat exchange fins. This ensures that the motor current remains within the safe 450kW envelope and prevents stator winding insulation degradation.

Detailed technical breakdown of thermal-dynamic flux within the pump chamber. The heat dissipation coefficient (HDC) must remain above 0.75 for peak performance. If HDC drops, check for scale buildup on internal heat exchange fins. This ensures that the motor current remains within the safe 450kW envelope and prevents stator winding insulation degradation.

Detailed technical breakdown of thermal-dynamic flux within the pump chamber. The heat dissipation coefficient (HDC) must remain above 0.75 for peak performance. If HDC drops, check for scale buildup on internal heat exchange fins. This ensures that the motor current remains within the safe 450kW envelope and prevents stator winding insulation degradation.

Detailed technical breakdown of thermal-dynamic flux within the pump chamber. The heat dissipation coefficient (HDC) must remain above 0.75 for peak performance. If HDC drops, check for scale buildup on internal heat exchange fins. This ensures that the motor current remains within the safe 450kW envelope and prevents stator winding insulation degradation.

Detailed technical breakdown of thermal-dynamic flux within the pump chamber. The heat dissipation coefficient (HDC) must remain above 0.75 for peak performance. If HDC drops, check for scale buildup on internal heat exchange fins. This ensures that the motor current

remains within the safe 450kW envelope and prevents stator winding insulation degradation.

Detailed technical breakdown of thermal-dynamic flux within the pump chamber. The heat dissipation coefficient (HDC) must remain above 0.75 for peak performance. If HDC drops, check for scale buildup on internal heat exchange fins. This ensures that the motor current remains within the safe 450kW envelope and prevents stator winding insulation degradation.

7.2 Diagnostic Guide - Advanced Analysis

Case Study Analysis: In recent field deployments, instances of 'Machine Warning' were successfully remediated by adjusting the impeller clearance by 0.5mm. When temperature sensors (T-101) deviate by more than 15% from the moving average, the Anomaly Service triggers an alert. Prescriptive actions include immediate inspection of cooling fans and validation of lubricant viscosity.

Observation	Root Cause	Action
Static Temp	Probe Frozen	Replace T-101
Humming Noise	Cavitation	Check Discharge
High Current	Motor Stalled	Emergency Stop

Detailed technical breakdown of thermal-dynamic flux within the pump chamber. The heat dissipation coefficient (HDC) must remain above 0.75 for peak performance. If HDC drops, check for scale buildup on internal heat exchange fins. This ensures that the motor current remains within the safe 450kW envelope and prevents stator winding insulation degradation.

Detailed technical breakdown of thermal-dynamic flux within the pump chamber. The heat dissipation coefficient (HDC) must remain above 0.75 for peak performance. If HDC drops, check for scale buildup on internal heat exchange fins. This ensures that the motor current remains within the safe 450kW envelope and prevents stator winding insulation degradation.

Detailed technical breakdown of thermal-dynamic flux within the pump chamber. The heat dissipation coefficient (HDC) must remain above 0.75 for peak performance. If HDC drops, check for scale buildup on internal heat exchange fins. This ensures that the motor current remains within the safe 450kW envelope and prevents stator winding insulation degradation.

Detailed technical breakdown of thermal-dynamic flux within the pump chamber. The heat dissipation coefficient (HDC) must remain above 0.75 for peak performance. If HDC drops, check for scale buildup on internal heat exchange fins. This ensures that the motor current remains within the safe 450kW envelope and prevents stator winding insulation degradation.

Detailed technical breakdown of thermal-dynamic flux within the pump chamber. The heat dissipation coefficient (HDC) must remain above 0.75 for peak performance. If HDC drops, check for scale buildup on internal heat exchange fins. This ensures that the motor current remains within the safe 450kW envelope and prevents stator winding insulation degradation.

Detailed technical breakdown of thermal-dynamic flux within the pump chamber. The heat dissipation coefficient (HDC) must remain above 0.75 for peak performance. If HDC drops, check for scale buildup on internal heat exchange fins. This ensures that the motor current remains within the safe 450kW envelope and prevents stator winding insulation degradation.

Detailed technical breakdown of thermal-dynamic flux within the pump chamber. The heat dissipation coefficient (HDC) must remain above 0.75 for peak performance. If HDC drops, check for scale buildup on internal heat exchange fins. This ensures that the motor current remains within the safe 450kW envelope and prevents stator winding insulation degradation.

Detailed technical breakdown of thermal-dynamic flux within the pump chamber. The heat dissipation coefficient (HDC) must remain above 0.75 for peak performance. If HDC drops, check for scale buildup on internal heat exchange fins. This ensures that the motor current

remains within the safe 450kW envelope and prevents stator winding insulation degradation.

Detailed technical breakdown of thermal-dynamic flux within the pump chamber. The heat dissipation coefficient (HDC) must remain above 0.75 for peak performance. If HDC drops, check for scale buildup on internal heat exchange fins. This ensures that the motor current remains within the safe 450kW envelope and prevents stator winding insulation degradation.

7.3 Diagnostic Guide - Advanced Analysis

Case Study Analysis: In recent field deployments, instances of 'Machine Warning' were successfully remediated by adjusting the impeller clearance by 0.5mm. When temperature sensors (T-101) deviate by more than 15% from the moving average, the Anomaly Service triggers an alert. Prescriptive actions include immediate inspection of cooling fans and validation of lubricant viscosity.

Observation	Root Cause	Action
Static Temp	Probe Frozen	Replace T-101
Humming Noise	Cavitation	Check Discharge
High Current	Motor Stalled	Emergency Stop

Detailed technical breakdown of thermal-dynamic flux within the pump chamber. The heat dissipation coefficient (HDC) must remain above 0.75 for peak performance. If HDC drops, check for scale buildup on internal heat exchange fins. This ensures that the motor current remains within the safe 450kW envelope and prevents stator winding insulation degradation.

Detailed technical breakdown of thermal-dynamic flux within the pump chamber. The heat dissipation coefficient (HDC) must remain above 0.75 for peak performance. If HDC drops, check for scale buildup on internal heat exchange fins. This ensures that the motor current remains within the safe 450kW envelope and prevents stator winding insulation degradation.

Detailed technical breakdown of thermal-dynamic flux within the pump chamber. The heat dissipation coefficient (HDC) must remain above 0.75 for peak performance. If HDC drops, check for scale buildup on internal heat exchange fins. This ensures that the motor current remains within the safe 450kW envelope and prevents stator winding insulation degradation.

Detailed technical breakdown of thermal-dynamic flux within the pump chamber. The heat dissipation coefficient (HDC) must remain above 0.75 for peak performance. If HDC drops, check for scale buildup on internal heat exchange fins. This ensures that the motor current remains within the safe 450kW envelope and prevents stator winding insulation degradation.

Detailed technical breakdown of thermal-dynamic flux within the pump chamber. The heat dissipation coefficient (HDC) must remain above 0.75 for peak performance. If HDC drops, check for scale buildup on internal heat exchange fins. This ensures that the motor current remains within the safe 450kW envelope and prevents stator winding insulation degradation.

Detailed technical breakdown of thermal-dynamic flux within the pump chamber. The heat dissipation coefficient (HDC) must remain above 0.75 for peak performance. If HDC drops, check for scale buildup on internal heat exchange fins. This ensures that the motor current remains within the safe 450kW envelope and prevents stator winding insulation degradation.

Detailed technical breakdown of thermal-dynamic flux within the pump chamber. The heat dissipation coefficient (HDC) must remain above 0.75 for peak performance. If HDC drops, check for scale buildup on internal heat exchange fins. This ensures that the motor current

remains within the safe 450kW envelope and prevents stator winding insulation degradation.

Detailed technical breakdown of thermal-dynamic flux within the pump chamber. The heat dissipation coefficient (HDC) must remain above 0.75 for peak performance. If HDC drops, check for scale buildup on internal heat exchange fins. This ensures that the motor current remains within the safe 450kW envelope and prevents stator winding insulation degradation.

7.4 Diagnostic Guide - Advanced Analysis

Case Study Analysis: In recent field deployments, instances of 'Machine Warning' were successfully remediated by adjusting the impeller clearance by 0.5mm. When temperature sensors (T-101) deviate by more than 15% from the moving average, the Anomaly Service triggers an alert. Prescriptive actions include immediate inspection of cooling fans and validation of lubricant viscosity.

Observation	Root Cause	Action
Static Temp	Probe Frozen	Replace T-101
Humming Noise	Cavitation	Check Discharge
High Current	Motor Stalled	Emergency Stop

Detailed technical breakdown of thermal-dynamic flux within the pump chamber. The heat dissipation coefficient (HDC) must remain above 0.75 for peak performance. If HDC drops, check for scale buildup on internal heat exchange fins. This ensures that the motor current remains within the safe 450kW envelope and prevents stator winding insulation degradation.

Detailed technical breakdown of thermal-dynamic flux within the pump chamber. The heat dissipation coefficient (HDC) must remain above 0.75 for peak performance. If HDC drops, check for scale buildup on internal heat exchange fins. This ensures that the motor current remains within the safe 450kW envelope and prevents stator winding insulation degradation.

Detailed technical breakdown of thermal-dynamic flux within the pump chamber. The heat dissipation coefficient (HDC) must remain above 0.75 for peak performance. If HDC drops, check for scale buildup on internal heat exchange fins. This ensures that the motor current remains within the safe 450kW envelope and prevents stator winding insulation degradation.

Detailed technical breakdown of thermal-dynamic flux within the pump chamber. The heat dissipation coefficient (HDC) must remain above 0.75 for peak performance. If HDC drops, check for scale buildup on internal heat exchange fins. This ensures that the motor current remains within the safe 450kW envelope and prevents stator winding insulation degradation.

Detailed technical breakdown of thermal-dynamic flux within the pump chamber. The heat dissipation coefficient (HDC) must remain above 0.75 for peak performance. If HDC drops, check for scale buildup on internal heat exchange fins. This ensures that the motor current remains within the safe 450kW envelope and prevents stator winding insulation degradation.

Detailed technical breakdown of thermal-dynamic flux within the pump chamber. The heat dissipation coefficient (HDC) must remain above 0.75 for peak performance. If HDC drops, check for scale buildup on internal heat exchange fins. This ensures that the motor current remains within the safe 450kW envelope and prevents stator winding insulation degradation.

Detailed technical breakdown of thermal-dynamic flux within the pump chamber. The heat dissipation coefficient (HDC) must remain above 0.75 for peak performance. If HDC drops, check for scale buildup on internal heat exchange fins. This ensures that the motor current remains within the safe 450kW envelope and prevents stator winding insulation degradation.

Detailed technical breakdown of thermal-dynamic flux within the pump chamber. The heat dissipation coefficient (HDC) must remain above 0.75 for peak performance. If HDC drops, check for scale buildup on internal heat exchange fins. This ensures that the motor current

remains within the safe 450kW envelope and prevents stator winding insulation degradation.

Detailed technical breakdown of thermal-dynamic flux within the pump chamber. The heat dissipation coefficient (HDC) must remain above 0.75 for peak performance. If HDC drops, check for scale buildup on internal heat exchange fins. This ensures that the motor current remains within the safe 450kW envelope and prevents stator winding insulation degradation.

7.5 Diagnostic Guide - Advanced Analysis

Case Study Analysis: In recent field deployments, instances of 'Machine Warning' were successfully remediated by adjusting the impeller clearance by 0.5mm. When temperature sensors (T-101) deviate by more than 15% from the moving average, the Anomaly Service triggers an alert. Prescriptive actions include immediate inspection of cooling fans and validation of lubricant viscosity.

Observation	Root Cause	Action
Static Temp	Probe Frozen	Replace T-101
Humming Noise	Cavitation	Check Discharge
High Current	Motor Stalled	Emergency Stop

Detailed technical breakdown of thermal-dynamic flux within the pump chamber. The heat dissipation coefficient (HDC) must remain above 0.75 for peak performance. If HDC drops, check for scale buildup on internal heat exchange fins. This ensures that the motor current remains within the safe 450kW envelope and prevents stator winding insulation degradation.

Detailed technical breakdown of thermal-dynamic flux within the pump chamber. The heat dissipation coefficient (HDC) must remain above 0.75 for peak performance. If HDC drops, check for scale buildup on internal heat exchange fins. This ensures that the motor current remains within the safe 450kW envelope and prevents stator winding insulation degradation.

Detailed technical breakdown of thermal-dynamic flux within the pump chamber. The heat dissipation coefficient (HDC) must remain above 0.75 for peak performance. If HDC drops, check for scale buildup on internal heat exchange fins. This ensures that the motor current remains within the safe 450kW envelope and prevents stator winding insulation degradation.

Detailed technical breakdown of thermal-dynamic flux within the pump chamber. The heat dissipation coefficient (HDC) must remain above 0.75 for peak performance. If HDC drops, check for scale buildup on internal heat exchange fins. This ensures that the motor current remains within the safe 450kW envelope and prevents stator winding insulation degradation.

Detailed technical breakdown of thermal-dynamic flux within the pump chamber. The heat dissipation coefficient (HDC) must remain above 0.75 for peak performance. If HDC drops, check for scale buildup on internal heat exchange fins. This ensures that the motor current remains within the safe 450kW envelope and prevents stator winding insulation degradation.

Detailed technical breakdown of thermal-dynamic flux within the pump chamber. The heat dissipation coefficient (HDC) must remain above 0.75 for peak performance. If HDC drops, check for scale buildup on internal heat exchange fins. This ensures that the motor current remains within the safe 450kW envelope and prevents stator winding insulation degradation.

Detailed technical breakdown of thermal-dynamic flux within the pump chamber. The heat dissipation coefficient (HDC) must remain above 0.75 for peak performance. If HDC drops, check for scale buildup on internal heat exchange fins. This ensures that the motor current remains within the safe 450kW envelope and prevents stator winding insulation degradation.

Detailed technical breakdown of thermal-dynamic flux within the pump chamber. The heat dissipation coefficient (HDC) must remain above 0.75 for peak performance. If HDC drops, check for scale buildup on internal heat exchange fins. This ensures that the motor current

remains within the safe 450kW envelope and prevents stator winding insulation degradation.

Detailed technical breakdown of thermal-dynamic flux within the pump chamber. The heat dissipation coefficient (HDC) must remain above 0.75 for peak performance. If HDC drops, check for scale buildup on internal heat exchange fins. This ensures that the motor current remains within the safe 450kW envelope and prevents stator winding insulation degradation.

7.6 Diagnostic Guide - Advanced Analysis

Case Study Analysis: In recent field deployments, instances of 'Machine Warning' were successfully remediated by adjusting the impeller clearance by 0.5mm. When temperature sensors (T-101) deviate by more than 15% from the moving average, the Anomaly Service triggers an alert. Prescriptive actions include immediate inspection of cooling fans and validation of lubricant viscosity.

Observation	Root Cause	Action
Static Temp	Probe Frozen	Replace T-101
Humming Noise	Cavitation	Check Discharge
High Current	Motor Stalled	Emergency Stop

Detailed technical breakdown of thermal-dynamic flux within the pump chamber. The heat dissipation coefficient (HDC) must remain above 0.75 for peak performance. If HDC drops, check for scale buildup on internal heat exchange fins. This ensures that the motor current remains within the safe 450kW envelope and prevents stator winding insulation degradation.

Detailed technical breakdown of thermal-dynamic flux within the pump chamber. The heat dissipation coefficient (HDC) must remain above 0.75 for peak performance. If HDC drops, check for scale buildup on internal heat exchange fins. This ensures that the motor current remains within the safe 450kW envelope and prevents stator winding insulation degradation.

Detailed technical breakdown of thermal-dynamic flux within the pump chamber. The heat dissipation coefficient (HDC) must remain above 0.75 for peak performance. If HDC drops, check for scale buildup on internal heat exchange fins. This ensures that the motor current remains within the safe 450kW envelope and prevents stator winding insulation degradation.

Detailed technical breakdown of thermal-dynamic flux within the pump chamber. The heat dissipation coefficient (HDC) must remain above 0.75 for peak performance. If HDC drops, check for scale buildup on internal heat exchange fins. This ensures that the motor current remains within the safe 450kW envelope and prevents stator winding insulation degradation.

Detailed technical breakdown of thermal-dynamic flux within the pump chamber. The heat dissipation coefficient (HDC) must remain above 0.75 for peak performance. If HDC drops, check for scale buildup on internal heat exchange fins. This ensures that the motor current remains within the safe 450kW envelope and prevents stator winding insulation degradation.

Detailed technical breakdown of thermal-dynamic flux within the pump chamber. The heat dissipation coefficient (HDC) must remain above 0.75 for peak performance. If HDC drops, check for scale buildup on internal heat exchange fins. This ensures that the motor current remains within the safe 450kW envelope and prevents stator winding insulation degradation.

Detailed technical breakdown of thermal-dynamic flux within the pump chamber. The heat dissipation coefficient (HDC) must remain above 0.75 for peak performance. If HDC drops, check for scale buildup on internal heat exchange fins. This ensures that the motor current remains within the safe 450kW envelope and prevents stator winding insulation degradation.

Detailed technical breakdown of thermal-dynamic flux within the pump chamber. The heat dissipation coefficient (HDC) must remain above 0.75 for peak performance. If HDC drops, check for scale buildup on internal heat exchange fins. This ensures that the motor current

remains within the safe 450kW envelope and prevents stator winding insulation degradation.

Detailed technical breakdown of thermal-dynamic flux within the pump chamber. The heat dissipation coefficient (HDC) must remain above 0.75 for peak performance. If HDC drops, check for scale buildup on internal heat exchange fins. This ensures that the motor current remains within the safe 450kW envelope and prevents stator winding insulation degradation.

7.7 Diagnostic Guide - Advanced Analysis

Case Study Analysis: In recent field deployments, instances of 'Machine Warning' were successfully remediated by adjusting the impeller clearance by 0.5mm. When temperature sensors (T-101) deviate by more than 15% from the moving average, the Anomaly Service triggers an alert. Prescriptive actions include immediate inspection of cooling fans and validation of lubricant viscosity.

Observation	Root Cause	Action
Static Temp	Probe Frozen	Replace T-101
Humming Noise	Cavitation	Check Discharge
High Current	Motor Stalled	Emergency Stop

Detailed technical breakdown of thermal-dynamic flux within the pump chamber. The heat dissipation coefficient (HDC) must remain above 0.75 for peak performance. If HDC drops, check for scale buildup on internal heat exchange fins. This ensures that the motor current remains within the safe 450kW envelope and prevents stator winding insulation degradation.

Detailed technical breakdown of thermal-dynamic flux within the pump chamber. The heat dissipation coefficient (HDC) must remain above 0.75 for peak performance. If HDC drops, check for scale buildup on internal heat exchange fins. This ensures that the motor current remains within the safe 450kW envelope and prevents stator winding insulation degradation.

Detailed technical breakdown of thermal-dynamic flux within the pump chamber. The heat dissipation coefficient (HDC) must remain above 0.75 for peak performance. If HDC drops, check for scale buildup on internal heat exchange fins. This ensures that the motor current remains within the safe 450kW envelope and prevents stator winding insulation degradation.

Detailed technical breakdown of thermal-dynamic flux within the pump chamber. The heat dissipation coefficient (HDC) must remain above 0.75 for peak performance. If HDC drops, check for scale buildup on internal heat exchange fins. This ensures that the motor current remains within the safe 450kW envelope and prevents stator winding insulation degradation.

Detailed technical breakdown of thermal-dynamic flux within the pump chamber. The heat dissipation coefficient (HDC) must remain above 0.75 for peak performance. If HDC drops, check for scale buildup on internal heat exchange fins. This ensures that the motor current remains within the safe 450kW envelope and prevents stator winding insulation degradation.

Detailed technical breakdown of thermal-dynamic flux within the pump chamber. The heat dissipation coefficient (HDC) must remain above 0.75 for peak performance. If HDC drops, check for scale buildup on internal heat exchange fins. This ensures that the motor current remains within the safe 450kW envelope and prevents stator winding insulation degradation.

Detailed technical breakdown of thermal-dynamic flux within the pump chamber. The heat dissipation coefficient (HDC) must remain above 0.75 for peak performance. If HDC drops, check for scale buildup on internal heat exchange fins. This ensures that the motor current remains within the safe 450kW envelope and prevents stator winding insulation degradation.

Detailed technical breakdown of thermal-dynamic flux within the pump chamber. The heat dissipation coefficient (HDC) must remain above 0.75 for peak performance. If HDC drops, check for scale buildup on internal heat exchange fins. This ensures that the motor current

remains within the safe 450kW envelope and prevents stator winding insulation degradation.

Detailed technical breakdown of thermal-dynamic flux within the pump chamber. The heat dissipation coefficient (HDC) must remain above 0.75 for peak performance. If HDC drops, check for scale buildup on internal heat exchange fins. This ensures that the motor current remains within the safe 450kW envelope and prevents stator winding insulation degradation.

7.8 Diagnostic Guide - Advanced Analysis

Case Study Analysis: In recent field deployments, instances of 'Machine Warning' were successfully remediated by adjusting the impeller clearance by 0.5mm. When temperature sensors (T-101) deviate by more than 15% from the moving average, the Anomaly Service triggers an alert. Prescriptive actions include immediate inspection of cooling fans and validation of lubricant viscosity.

Observation	Root Cause	Action
Static Temp	Probe Frozen	Replace T-101
Humming Noise	Cavitation	Check Discharge
High Current	Motor Stalled	Emergency Stop

Detailed technical breakdown of thermal-dynamic flux within the pump chamber. The heat dissipation coefficient (HDC) must remain above 0.75 for peak performance. If HDC drops, check for scale buildup on internal heat exchange fins. This ensures that the motor current remains within the safe 450kW envelope and prevents stator winding insulation degradation.

Detailed technical breakdown of thermal-dynamic flux within the pump chamber. The heat dissipation coefficient (HDC) must remain above 0.75 for peak performance. If HDC drops, check for scale buildup on internal heat exchange fins. This ensures that the motor current remains within the safe 450kW envelope and prevents stator winding insulation degradation.

Detailed technical breakdown of thermal-dynamic flux within the pump chamber. The heat dissipation coefficient (HDC) must remain above 0.75 for peak performance. If HDC drops, check for scale buildup on internal heat exchange fins. This ensures that the motor current remains within the safe 450kW envelope and prevents stator winding insulation degradation.

Detailed technical breakdown of thermal-dynamic flux within the pump chamber. The heat dissipation coefficient (HDC) must remain above 0.75 for peak performance. If HDC drops, check for scale buildup on internal heat exchange fins. This ensures that the motor current remains within the safe 450kW envelope and prevents stator winding insulation degradation.

Detailed technical breakdown of thermal-dynamic flux within the pump chamber. The heat dissipation coefficient (HDC) must remain above 0.75 for peak performance. If HDC drops, check for scale buildup on internal heat exchange fins. This ensures that the motor current remains within the safe 450kW envelope and prevents stator winding insulation degradation.

Detailed technical breakdown of thermal-dynamic flux within the pump chamber. The heat dissipation coefficient (HDC) must remain above 0.75 for peak performance. If HDC drops, check for scale buildup on internal heat exchange fins. This ensures that the motor current remains within the safe 450kW envelope and prevents stator winding insulation degradation.

Detailed technical breakdown of thermal-dynamic flux within the pump chamber. The heat dissipation coefficient (HDC) must remain above 0.75 for peak performance. If HDC drops, check for scale buildup on internal heat exchange fins. This ensures that the motor current remains within the safe 450kW envelope and prevents stator winding insulation degradation.

Detailed technical breakdown of thermal-dynamic flux within the pump chamber. The heat dissipation coefficient (HDC) must remain above 0.75 for peak performance. If HDC drops, check for scale buildup on internal heat exchange fins. This ensures that the motor current

remains within the safe 450kW envelope and prevents stator winding insulation degradation.

Detailed technical breakdown of thermal-dynamic flux within the pump chamber. The heat dissipation coefficient (HDC) must remain above 0.75 for peak performance. If HDC drops, check for scale buildup on internal heat exchange fins. This ensures that the motor current remains within the safe 450kW envelope and prevents stator winding insulation degradation.

7.9 Diagnostic Guide - Advanced Analysis

Case Study Analysis: In recent field deployments, instances of 'Machine Warning' were successfully remediated by adjusting the impeller clearance by 0.5mm. When temperature sensors (T-101) deviate by more than 15% from the moving average, the Anomaly Service triggers an alert. Prescriptive actions include immediate inspection of cooling fans and validation of lubricant viscosity.

Observation	Root Cause	Action
Static Temp	Probe Frozen	Replace T-101
Humming Noise	Cavitation	Check Discharge
High Current	Motor Stalled	Emergency Stop

Detailed technical breakdown of thermal-dynamic flux within the pump chamber. The heat dissipation coefficient (HDC) must remain above 0.75 for peak performance. If HDC drops, check for scale buildup on internal heat exchange fins. This ensures that the motor current remains within the safe 450kW envelope and prevents stator winding insulation degradation.

Detailed technical breakdown of thermal-dynamic flux within the pump chamber. The heat dissipation coefficient (HDC) must remain above 0.75 for peak performance. If HDC drops, check for scale buildup on internal heat exchange fins. This ensures that the motor current remains within the safe 450kW envelope and prevents stator winding insulation degradation.

Detailed technical breakdown of thermal-dynamic flux within the pump chamber. The heat dissipation coefficient (HDC) must remain above 0.75 for peak performance. If HDC drops, check for scale buildup on internal heat exchange fins. This ensures that the motor current remains within the safe 450kW envelope and prevents stator winding insulation degradation.

Detailed technical breakdown of thermal-dynamic flux within the pump chamber. The heat dissipation coefficient (HDC) must remain above 0.75 for peak performance. If HDC drops, check for scale buildup on internal heat exchange fins. This ensures that the motor current remains within the safe 450kW envelope and prevents stator winding insulation degradation.

Detailed technical breakdown of thermal-dynamic flux within the pump chamber. The heat dissipation coefficient (HDC) must remain above 0.75 for peak performance. If HDC drops, check for scale buildup on internal heat exchange fins. This ensures that the motor current remains within the safe 450kW envelope and prevents stator winding insulation degradation.

Detailed technical breakdown of thermal-dynamic flux within the pump chamber. The heat dissipation coefficient (HDC) must remain above 0.75 for peak performance. If HDC drops, check for scale buildup on internal heat exchange fins. This ensures that the motor current remains within the safe 450kW envelope and prevents stator winding insulation degradation.

Detailed technical breakdown of thermal-dynamic flux within the pump chamber. The heat dissipation coefficient (HDC) must remain above 0.75 for peak performance. If HDC drops, check for scale buildup on internal heat exchange fins. This ensures that the motor current remains within the safe 450kW envelope and prevents stator winding insulation degradation.

Detailed technical breakdown of thermal-dynamic flux within the pump chamber. The heat dissipation coefficient (HDC) must remain above 0.75 for peak performance. If HDC drops, check for scale buildup on internal heat exchange fins. This ensures that the motor current

remains within the safe 450kW envelope and prevents stator winding insulation degradation.

Detailed technical breakdown of thermal-dynamic flux within the pump chamber. The heat dissipation coefficient (HDC) must remain above 0.75 for peak performance. If HDC drops, check for scale buildup on internal heat exchange fins. This ensures that the motor current remains within the safe 450kW envelope and prevents stator winding insulation degradation.

7.10 Diagnostic Guide - Advanced Analysis

Case Study Analysis: In recent field deployments, instances of 'Machine Warning' were successfully remediated by adjusting the impeller clearance by 0.5mm. When temperature sensors (T-101) deviate by more than 15% from the moving average, the Anomaly Service triggers an alert. Prescriptive actions include immediate inspection of cooling fans and validation of lubricant viscosity.

Observation	Root Cause	Action
Static Temp	Probe Frozen	Replace T-101
Humming Noise	Cavitation	Check Discharge
High Current	Motor Stalled	Emergency Stop

Detailed technical breakdown of thermal-dynamic flux within the pump chamber. The heat dissipation coefficient (HDC) must remain above 0.75 for peak performance. If HDC drops, check for scale buildup on internal heat exchange fins. This ensures that the motor current remains within the safe 450kW envelope and prevents stator winding insulation degradation.

Detailed technical breakdown of thermal-dynamic flux within the pump chamber. The heat dissipation coefficient (HDC) must remain above 0.75 for peak performance. If HDC drops, check for scale buildup on internal heat exchange fins. This ensures that the motor current remains within the safe 450kW envelope and prevents stator winding insulation degradation.

Detailed technical breakdown of thermal-dynamic flux within the pump chamber. The heat dissipation coefficient (HDC) must remain above 0.75 for peak performance. If HDC drops, check for scale buildup on internal heat exchange fins. This ensures that the motor current remains within the safe 450kW envelope and prevents stator winding insulation degradation.

Detailed technical breakdown of thermal-dynamic flux within the pump chamber. The heat dissipation coefficient (HDC) must remain above 0.75 for peak performance. If HDC drops, check for scale buildup on internal heat exchange fins. This ensures that the motor current remains within the safe 450kW envelope and prevents stator winding insulation degradation.

Detailed technical breakdown of thermal-dynamic flux within the pump chamber. The heat dissipation coefficient (HDC) must remain above 0.75 for peak performance. If HDC drops, check for scale buildup on internal heat exchange fins. This ensures that the motor current remains within the safe 450kW envelope and prevents stator winding insulation degradation.

Detailed technical breakdown of thermal-dynamic flux within the pump chamber. The heat dissipation coefficient (HDC) must remain above 0.75 for peak performance. If HDC drops, check for scale buildup on internal heat exchange fins. This ensures that the motor current remains within the safe 450kW envelope and prevents stator winding insulation degradation.

Detailed technical breakdown of thermal-dynamic flux within the pump chamber. The heat dissipation coefficient (HDC) must remain above 0.75 for peak performance. If HDC drops, check for scale buildup on internal heat exchange fins. This ensures that the motor current remains within the safe 450kW envelope and prevents stator winding insulation degradation.

Detailed technical breakdown of thermal-dynamic flux within the pump chamber. The heat dissipation coefficient (HDC) must remain above 0.75 for peak performance. If HDC drops, check for scale buildup on internal heat exchange fins. This ensures that the motor current

remains within the safe 450kW envelope and prevents stator winding insulation degradation.

Detailed technical breakdown of thermal-dynamic flux within the pump chamber. The heat dissipation coefficient (HDC) must remain above 0.75 for peak performance. If HDC drops, check for scale buildup on internal heat exchange fins. This ensures that the motor current remains within the safe 450kW envelope and prevents stator winding insulation degradation.

7.11 Diagnostic Guide - Advanced Analysis

Case Study Analysis: In recent field deployments, instances of 'Machine Warning' were successfully remediated by adjusting the impeller clearance by 0.5mm. When temperature sensors (T-101) deviate by more than 15% from the moving average, the Anomaly Service triggers an alert. Prescriptive actions include immediate inspection of cooling fans and validation of lubricant viscosity.

Observation	Root Cause	Action
Static Temp	Probe Frozen	Replace T-101
Humming Noise	Cavitation	Check Discharge
High Current	Motor Stalled	Emergency Stop

Detailed technical breakdown of thermal-dynamic flux within the pump chamber. The heat dissipation coefficient (HDC) must remain above 0.75 for peak performance. If HDC drops, check for scale buildup on internal heat exchange fins. This ensures that the motor current remains within the safe 450kW envelope and prevents stator winding insulation degradation.

Detailed technical breakdown of thermal-dynamic flux within the pump chamber. The heat dissipation coefficient (HDC) must remain above 0.75 for peak performance. If HDC drops, check for scale buildup on internal heat exchange fins. This ensures that the motor current remains within the safe 450kW envelope and prevents stator winding insulation degradation.

Detailed technical breakdown of thermal-dynamic flux within the pump chamber. The heat dissipation coefficient (HDC) must remain above 0.75 for peak performance. If HDC drops, check for scale buildup on internal heat exchange fins. This ensures that the motor current remains within the safe 450kW envelope and prevents stator winding insulation degradation.

Detailed technical breakdown of thermal-dynamic flux within the pump chamber. The heat dissipation coefficient (HDC) must remain above 0.75 for peak performance. If HDC drops, check for scale buildup on internal heat exchange fins. This ensures that the motor current remains within the safe 450kW envelope and prevents stator winding insulation degradation.

Detailed technical breakdown of thermal-dynamic flux within the pump chamber. The heat dissipation coefficient (HDC) must remain above 0.75 for peak performance. If HDC drops, check for scale buildup on internal heat exchange fins. This ensures that the motor current remains within the safe 450kW envelope and prevents stator winding insulation degradation.

Detailed technical breakdown of thermal-dynamic flux within the pump chamber. The heat dissipation coefficient (HDC) must remain above 0.75 for peak performance. If HDC drops, check for scale buildup on internal heat exchange fins. This ensures that the motor current remains within the safe 450kW envelope and prevents stator winding insulation degradation.

Detailed technical breakdown of thermal-dynamic flux within the pump chamber. The heat dissipation coefficient (HDC) must remain above 0.75 for peak performance. If HDC drops, check for scale buildup on internal heat exchange fins. This ensures that the motor current remains within the safe 450kW envelope and prevents stator winding insulation degradation.

Detailed technical breakdown of thermal-dynamic flux within the pump chamber. The heat dissipation coefficient (HDC) must remain above 0.75 for peak performance. If HDC drops, check for scale buildup on internal heat exchange fins. This ensures that the motor current

remains within the safe 450kW envelope and prevents stator winding insulation degradation.

Detailed technical breakdown of thermal-dynamic flux within the pump chamber. The heat dissipation coefficient (HDC) must remain above 0.75 for peak performance. If HDC drops, check for scale buildup on internal heat exchange fins. This ensures that the motor current remains within the safe 450kW envelope and prevents stator winding insulation degradation.

END OF MANUAL - REVISION 2026.03 - AGENT GENERATED