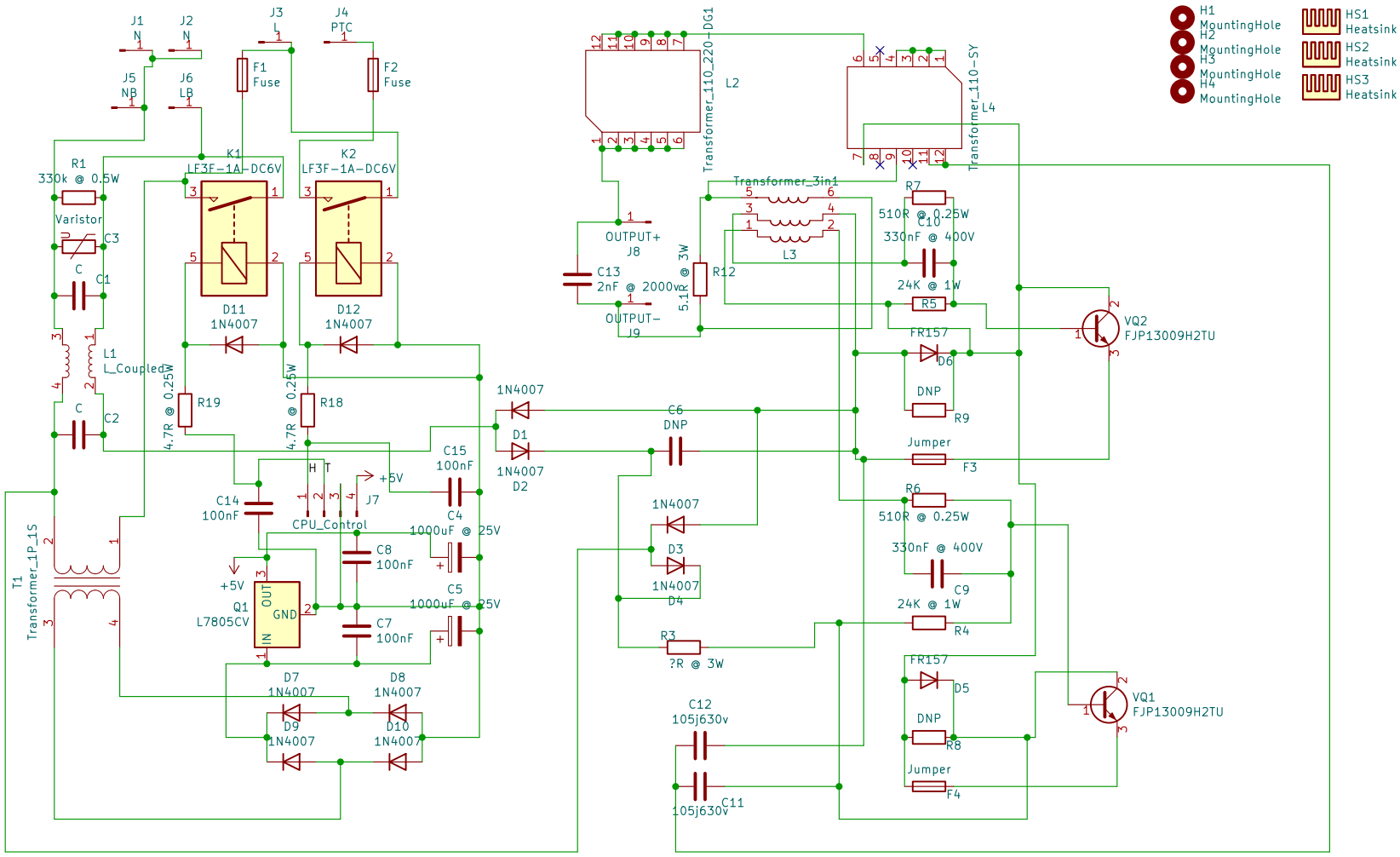

Sheet: /
File: UltraSonicCleaner-Board_One-REVERSE.kicad_sch

Title: UltraSonic Cleaner Reverse Engineered

Size: USLetter	Date: 2019-12-29	Rev: A
KiCad E.D.A. kicad 5.99.0-unknown-c33b2cfa8d128ubuntu20.04.1		Id: 1/1