EC200G&EC200U Series
Compatible Design

LTE Standard Module Series

Version: 1.0

Date: 2023-09-23

Status: Released

At Quectel, our aim is to provide timely and comprehensive services to our customers. If you require any assistance, please contact our headquarters:

Quectel Wireless Solutions Co., Ltd.
Building 5, Shanghai Business Park Phase III (Area B), No.1016 Tianlin Road, Minhang District, Shanghai 200233, China
Tel: +86 21 5108 6236
Email: info@quectel.com

Or our local offices. For more information, please visit:
http://www.quectel.com/support/sales.htm.

For technical support, or to report documentation errors, please visit:
http://www.quectel.com/support/technical.htm.
Or email us at: support@quectel.com.

Legal Notices

We offer information as a service to you. The provided information is based on your requirements and we make every effort to ensure its quality. You agree that you are responsible for using independent analysis and evaluation in designing intended products, and we provide reference designs for illustrative purposes only. Before using any hardware, software or service guided by this document, please read this notice carefully. Even though we employ commercially reasonable efforts to provide the best possible experience, you hereby acknowledge and agree that this document and related services hereunder are provided to you on an “as available” basis. We may revise or restate this document from time to time at our sole discretion without any prior notice to you.

Use and Disclosure Restrictions

License Agreements

Documents and information provided by us shall be kept confidential, unless specific permission is granted. They shall not be accessed or used for any purpose except as expressly provided herein.

Copyright

Our and third-party products hereunder may contain copyrighted material. Such copyrighted material shall not be copied, reproduced, distributed, merged, published, translated, or modified without prior written consent. We and the third party have exclusive rights over copyrighted material. No license shall be granted or conveyed under any patents, copyrights, trademarks, or service mark rights. To avoid ambiguities, purchasing in any form cannot be deemed as granting a license other than the normal non-exclusive, royalty-free license to use the material. We reserve the right to take legal action for noncompliance with abovementioned requirements, unauthorized use, or other illegal or malicious use of the material.

Trademarks

Except as otherwise set forth herein, nothing in this document shall be construed as conferring any rights to use any trademark, trade name or name, abbreviation, or counterfeit product thereof owned by Quectel or any third party in advertising, publicity, or other aspects.

Third-Party Rights

This document may refer to hardware, software and/or documentation owned by one or more third parties ("third-party materials"). Use of such third-party materials shall be governed by all restrictions and obligations applicable thereto.

We make no warranty or representation, either express or implied, regarding the third-party materials, including but not limited to any implied or statutory, warranties of merchantability or fitness for a particular purpose, quiet enjoyment, system integration, information accuracy, and non-infringement of any third-party intellectual property rights with regard to the licensed technology or use thereof. Nothing herein constitutes a representation or warranty by us to either develop, enhance, modify, distribute, market, sell, offer for sale, or otherwise maintain production of any our products or any other hardware, software, device, tool, information, or product. We moreover disclaim any and all warranties arising from the course of dealing or usage of trade.

Privacy Policy

To implement module functionality, certain device data are uploaded to Quectel's or third-party's servers, including carriers, chipset suppliers or customer-designated servers. Quectel, strictly abiding by the relevant laws and regulations, shall retain, use, disclose or otherwise process relevant data for the purpose of performing the service only or as permitted by applicable laws. Before data interaction with third parties, please be informed of their privacy and data security policy.

Disclaimer

a) We acknowledge no liability for any injury or damage arising from the reliance upon the information.
b) We shall bear no liability resulting from any inaccuracies or omissions, or from the use of the information contained herein.
c) While we have made every effort to ensure that the functions and features under development are free from errors, it is possible that they could contain errors, inaccuracies, and omissions. Unless otherwise provided by valid agreement, we make no warranties of any kind, either implied or express, and exclude all liability for any loss or damage suffered in connection with the use of features and functions under development, to the maximum extent permitted by law, regardless of whether such loss or damage may have been foreseeable.
d) We are not responsible for the accessibility, safety, accuracy, availability, legality, or completeness of information, advertising, commercial offers, products, services, and materials on third-party websites and third-party resources.

Copyright © Quectel Wireless Solutions Co., Ltd. 2023. All rights reserved.

About the Document

Revision History

Version	Date	Author	Description
-	2023-06-28	Denny QIN/ Chris LIANG/ Kleene QIN/ Kevin WANG	Creation of the document
1.0	2023-09-23	Denny QIN/ Chris LIANG/ Kleene QIN/ Kevin WANG	First official release

Contents

About the Document **3**
Contents **4**
Table Index **5**
Figure Index **6**

1 Introduction **7**
1.1. Special Mark 7

2 General Description **8**
2.1. Product Description 8
2.2. Feature Overview 9

3 Pin Definition **12**
3.1. Pin Assignment 12
3.2. Pin Comparison 14

4 Hardware Interface Design **21**
4.1. Power Supply 21
4.2. Turn On/Off 22
4.2.1. Turn On 22
4.2.2. Turn Off 24
4.3. Reset 25
4.4. (U)SIM Interfaces 25
4.5. PCM Interface and I2C Interfaces 26
4.6. UART Interfaces 28
4.7. SD Card Interface 28
4.8. ADC Interfaces 29
4.9. USB Interface 29
4.10. Analog Audio Interface 29
4.11. Emergency Download Interface 30
4.12. Network Status Indication 31
4.13. Antenna Interfaces 32

5 Mechanical Information **35**
5.1. Recommended Compatible Footprint 35
5.2. Sketch Map Installation 37

6 Appendix References **38**

Table Index

Table 1: Special Mark 7
Table 2: Supported Network of the Modules 8
Table 3: Supported Functions of the Modules 8
Table 4: Module General Information 9
Table 5: Feature Overview 9
Table 6: Parameter Definition 14
Table 7: Pin Difference of (U)SIM Interfaces 25
Table 8: Pin Definition of PCM Interface for EC200U Series 26
Table 9: Pin Definition of PCM Interface for EC200G-CN 26
Table 10: Pin Difference of Debug UART 28
Table 11: Pin Difference of SD Card Interface 28
Table 12: Pin Difference of Analog Audio Interface 30
Table 13: Pin Difference of Emergency Download Interface 30
Table 14: Pin Definition of EC200U Series 31
Table 15: Pin Definition of EC200G-CN 31
Table 16: Network Status Indication and Module Network Status (EC200U Series) 31
Table 17: Network Status Indication and Module Network Status (EC200G-CN) 32
Table 18: Antenna Pin Definition of EC200U Series 32
Table 19: Antenna Pin Definition of EC200G-CN 33
Table 20: Related Documents 38
Table 21: Terms and Abbreviations 38

Figure Index

Figure 1: EC200U Series Pin Assignment 12
Figure 2: EC200G-CN Pin Assignment 13
Figure 3: Reference Design of Power Supply 21
Figure 4: Reference Circuit for Turning On Module with Driving Circuit 22
Figure 5: Reference Circuit for Turning On Module with Button 22
Figure 6: Turn-on Timing (EC200U Series) 23
Figure 7: Turn-on Timing (EC200G-CN) 24
Figure 8: Reference Circuit of PCM Application with Audio Codec (EC200U Series) 27
Figure 9: Reference Circuit of PCM Application with Audio Codec (EC200G-CN) 27
Figure 10: RF Antenna Interfaces (EC200U Series) 33
Figure 11: RF Antenna Interfaces (EC200G-CN) 34
Figure 12: GNSS Antenna Interface Reference Circuit 34
Figure 13: Bottom View 35
Figure 14: Recommended Footprint 36
Figure 15: Installation Sketch Map 37

1 Introduction

Quectel LTE Standard EC200U series and EC200G-CN modules are compatible with each other. This document outlines the compatible design between the two modules.

1.1. Special Mark

Table 1: Special Mark

Mark	Definition
*	Unless otherwise specified, when an asterisk (*) is used after a function, feature, interface, pin name, AT command, argument, and so on, it indicates that the function, feature, interface, pin, AT command, argument, and so on, are under development and currently not supported; and the asterisk (*) after a model indicates that the sample of such model is currently unavailable.

NOTE

Where applicable, this document will use the words module/modules when referring to common attributes, and “EC200U series” or “EC200G-CN” when referring to attributes associated with a particular subset of module.

2 General Description

2.1. Product Description

EC200U series is a wireless communication module, which supports LTE-FDD, LTE-TDD and GSM/GPRS network data connection. It also provides voice function for your special applications, and supports GNSS.

EC200G-CN is a wireless communication module, which supports LTE-FDD and LTE-TDD network data connection. It also provides voice* function for your special applications, and supports GNSS.

Table 2: Supported Network of the Modules

Module	LTE-FDD	LTE-TDD	WCDMA	EDGE/EGPRS	GPRS
EC200U Series	√	√	-	-	○
EC200G-CN	√	√	-	-	-

Table 3: Supported Functions of the Modules

Module	Voice Functionality	Bluetooth	Wi-Fi Scan	GNSS
EC200U Series [1]	√	○	○	○
EC200G-CN [2]	○	○	√	○

[1] EC200U series supports Bluetooth and Wi-Fi Scan functions. Due to the shared antenna interface, the two functions cannot be used simultaneously. Additionally, Bluetooth and Wi-Fi Scan functions are optional, and Wi-Fi Scan only supports receiving. Contact Quectel Technical Support for details.
[2] For EC200G-CN, Wi-Fi Scan shares the same antenna with the main antenna. The two functions cannot be used at the same time, and Wi-Fi Scan only supports receiving.

NOTE

1. "√" means supported.
2. "-" means not supported.
3. "○" means optional.

Table 4: Module General Information

Module Name	Appearance	Packaging	Dimensions (mm)	Description
EC200U Series		80 LCC pins 64 LGA pins	28.0 × 31.0× 2.4	LTE Standard module
EC200G-CN		80 LCC pins 64 LGA pins	28.0 × 31.0 × 2.4	LTE Standard module

2.2. Feature Overview

The following table compares the general features of EC200U series and EC200G-CN.

Table 5: Feature Overview

Feature	EC200U Series	EC200G-CN
Power Supply	● 3.3–4.3 V ● Typ. 3.8 V	● 3.3–4.3 V ● Typ. 3.8 V
Peak Current	**VBAT_BB:** ● Max. 1.5 A **VBAT_RF:** ● Max. 2.0 A	**VBAT_BB:** ● Max. 1.5 A **VBAT_RF:** ● Max. 2.0 A

Sleep Current	**EC200U-CN: (USB disconnected)** **EGSM900:** 1.46 mA @ DRX = 5 **DCS1800:** 1.46 mA @ DRX = 5 **LTE-FDD:** 1.85 mA @ PF = 64 **LTE-TDD:** 1.97 mA @ PF = 64 **EC200U-EU: (USB disconnected)** **GSM850:** 2.15 mA @ DRX = 5 **DCS1800:** 2.16 mA @ DRX = 5 **LTE-FDD:** 1.85 mA @ PF = 64 **LTE-TDD:** 1.87 mA @ PF = 64 **EC200U-AU: (USB disconnected)** **EGSM900:** 1.52 mA @ DRX = 5 **DCS1800:** 1.51 mA @ DRX = 5 **LTE-FDD:** 1.87 mA @ PF = 64 **LTE-TDD:** 1.91 mA @ PF = 64	**EC200G-CN: (USB disconnected)** **LTE-FDD:** 1.82 mA @ PF = 64 **LTE-TDD:** 2.35 mA @ PF = 64
Temperature Range	Operating temperature range [3]: -35 °C to +75 °C Extended temperature range [4]: -40 °C to +85 °C Storage temperature range: -40 °C to +90 °C	Operating temperature range [3]: -35 °C to +75 °C Extended temperature range [4]: -40 °C to +85 °C Storage temperature range: -40 °C to +90 °C

[3] Within this range, the module's indicators comply with 3GPP specification requirements.

[4] Within this range, the module retains the ability to establish and maintain functions such as voice (this function is still under development for EC200G-CN), SMS, data transmission and emergency call* (EC200U series does not support this function), without any unrecoverable malfunction. Radio spectrum and radio network remain uninfluenced, whereas the value of one or more parameters, such as P_{out}, may decrease and fall below the range of the 3GPP specified tolerances. When the temperature returns to the normal operating temperature range, the module's indicators will comply with 3GPP specification requirements again.

UART Interfaces	**Main UART:** ● Used for AT command communication and data transmission ● Baud rate: up to 921600 bps; Default: 115200 bps ● RTS and CTS hardware flow control **Debug UART:** ● Used for AP log output ● Baud rate: 921600 bps ● Cannot be used as a general UART **Auxiliary UART:** ● Used for data transmission	**Main UART:** ● Used for AT command communication and data transmission ● Baud rate: up to 921600 bps; Default: 115200 bps ● RTS and CTS hardware flow control **Debug UART:** ● Used for AP log output ● Baud rate: 2 Mbps ● Cannot be used as a general UART **Auxiliary UART:** ● Used for data transmission
USB Interface	● Compliant with USB 2.0 specification (slave mode only), with transmission rates up to 480 Mbps ● Used for AT command communication, data transmission, software debugging and firmware upgrade ● Supports USB serial drivers for Windows 7/8/8.1/10/11, Linux 2.6–6.5 and Android 4.x–13.x systems	● Compliant with USB 2.0 specification (slave mode only), with transmission rates up to 480 Mbps ● Used for AT command communication, data transmission, software debugging and firmware upgrade ● Supports USB serial drivers for Windows 7/8/8.1/10/11, Linux 2.6–6.5 and Android 4.x–13.x systems
Digital Audio	PCM interface	PCM interface (optional) [5]
Analog Audio	Supported	Optional
SD Card Interface	Supported	-
I2C Interfaces	Supported	Supported
ADC Interfaces	Supported	Supported
Emergency Download Interface	Supported	Supported
Network Indication	Supported	Supported
(U)SIM Interfaces	Supported	Supported
Firmware Upgrade	Via USB interface or FOTA	Via USB interface or FOTA

[5] For EC200G-CN module, the PCM function conflicts with analog audio function. Thus, the two functions cannot be used simultaneously.

3 Pin Definition

3.1. Pin Assignment

The following figures show the pin assignment of EC200U series and EC200G-CN.

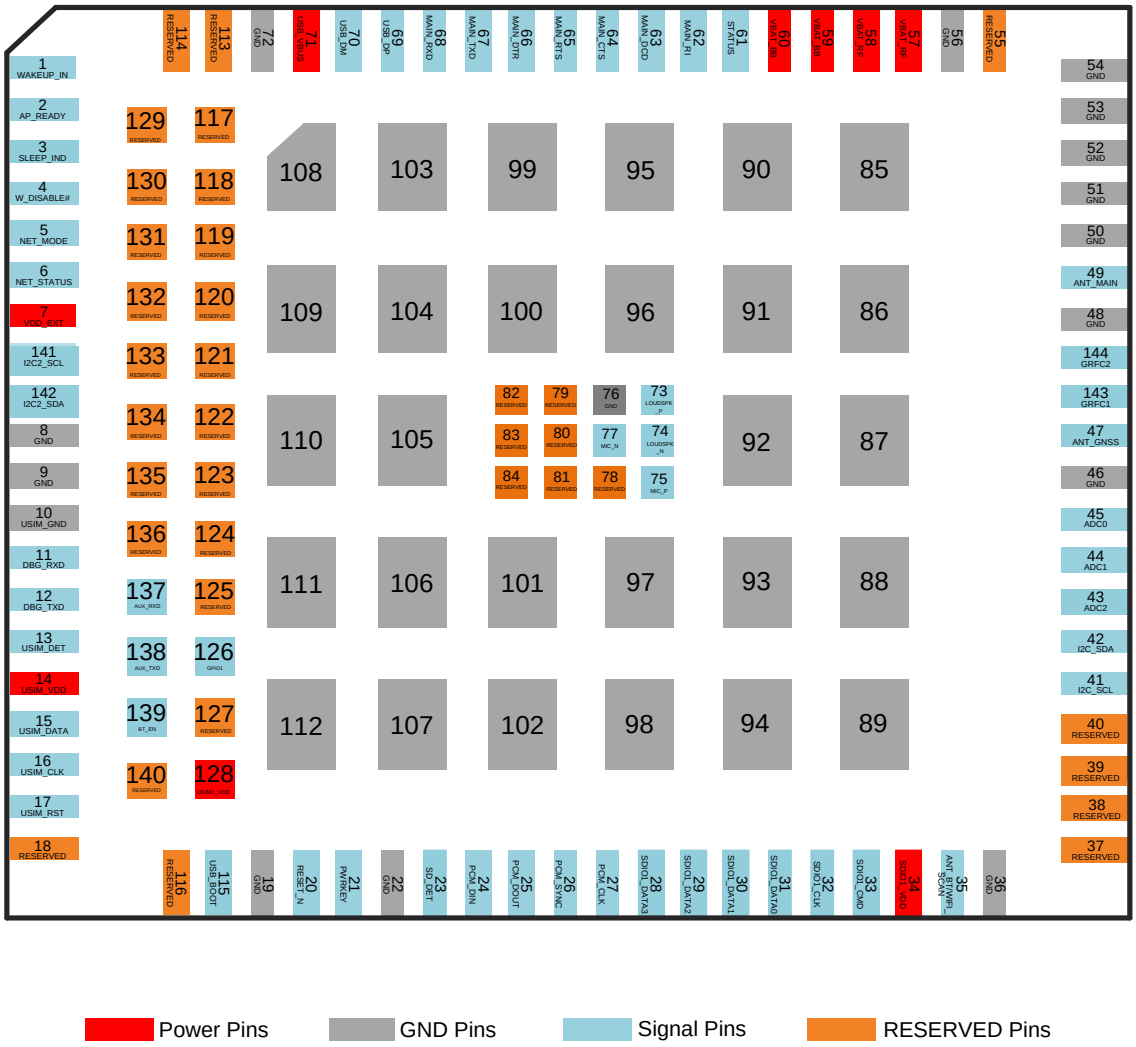

Figure 1: EC200U Series Pin Assignment

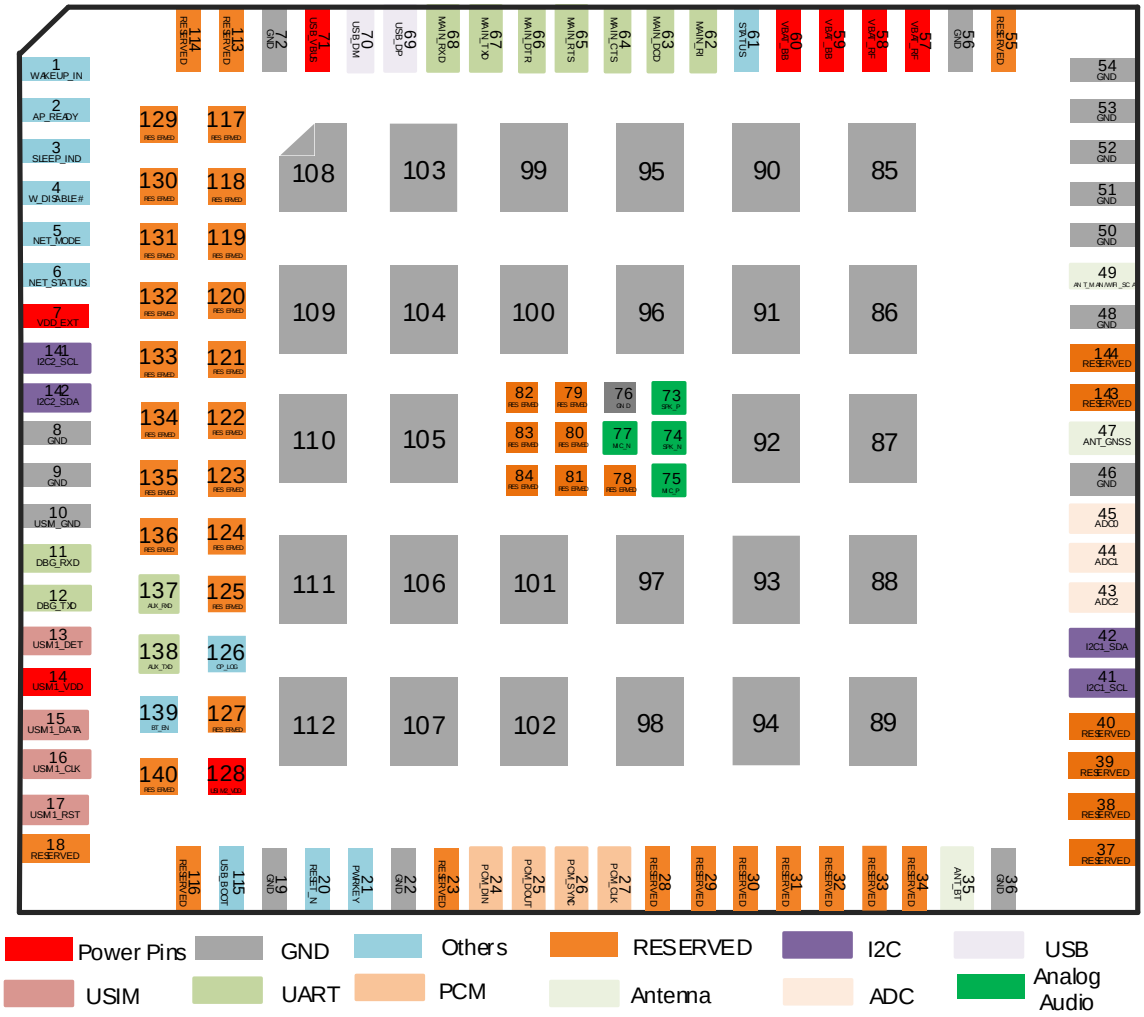

Figure 2: EC200G-CN Pin Assignment

NOTE

1. Keep all RESERVED pins and unused pins open, and connect all GND pins to the ground in the design.
2. For EC200U series:
   - If the emergency download function is not used, do not pull USB_BOOT up before the module's successful startup.
3. For EC200G-CN:
   - If the emergency download function is not used, do not pull USB_BOOT to low or high level, and keep it open before the module's successful startup.
   - PCM function and analog audio function cannot be used simultaneously.
   - GNSS, Bluetooth, analog audio, PCM, and USIM2 functions of the module are optional. For more details, contact Quectel Technical Support.

3.2. Pin Comparison

Table 6: Parameter Definition

Parameter	Description
AI	Analog Input
AIO	Analog Input/Output
AO	Analog Output
DI	Digital Input
DIO	Digital Input/Output
DO	Digital Output
OD	Open Drain
PI	Power Input
PO	Power Output

The following table shows EC200U series and EC200G-CN pins with the function.

Table 6: Pin Comparison Between EC200U Series and EC200G-CN

Pin No.	EC200U Series			EC200G-CN			Pin Description
	Pin Name	Power Domain	I/O	Pin Name	Power Domain	I/O	
1	WAKEUP_IN	1.8 V	DI	WAKEUP_IN	1.8 V	DI	Wake up the module
2	AP_READY	1.8 V	DI	AP_READY	1.8 V	DI	Application processor ready
3	SLEEP_IND	1.8 V	DO	SLEEP_IND	1.8 V	DO	Sleep indicator
4	W_DISABLE#	1.8 V	DI	W_DISABLE#	1.8 V	DI	Airplane mode control
5	NET_MODE	1.8 V	DO	NET_MODE	1.8 V	DO	1. Indicate the module's network activity status 2. Indicate the module's network registration mode
6	NET_STATUS	1.8 V	DO	NET_STATUS	1.8 V	DO	1. Indicate the module's network registration mode 2. Indicate the module’s network activity status
7	VDD_EXT	1.8 V	PO	VDD_EXT	1.8 V	PO	Provide 1.8 V for external circuit
8, 9	GND	-	-	GND	-	-	-
10	USIM_GND	-	-	USIM_GND	-	-	-
11	DBG_RXD	1.8 V	DI	DBG_RXD	1.8 V	DI	Debug UART receive

12	DBG_TXD	1.8 V	DO	DBG_TXD	1.8 V	DO	Debug UART transmit
13	USIM_DET	1.8 V	DI	USIM1_DET	1.8 V	DI	(U)SIM1 card hot-plug detect
14	USIM_VDD	1.8/3.0 V	PO	USIM1_VDD	1.8/3.0 V	PO	(U)SIM1 card power supply
15	USIM_DATA	1.8/3.0 V	DIO	USIM1_DATA	1.8/3.0 V	DIO	(U)SIM1 card data
16	USIM_CLK	1.8/3.0 V	DO	USIM1_CLK	1.8/3.0 V	DO	(U)SIM1 card clock
17	USIM_RST	1.8/3.0 V	DO	USIM1_RST	1.8/3.0 V	DO	(U)SIM1 card reset
19	GND	-	-	GND	-	-	-
20	RESET_N	VBAT power domain	DI	RESET_N	VBAT power domain	DI	Reset the module
21	PWRKEY	VBAT power domain	DI	PWRKEY	VBAT power domain	DI	Turn on/off the module
22	GND	-	-	GND	-	-	-
23	SD_DET	1.8 V	DI	RESERVED	-	-	1. SD card detect 2. -
24	PCM_DIN	1.8 V	DI	PCM_DIN	1.8 V	DI	PCM data input
25	PCM_DOUT	1.8 V	DO	PCM_DOUT	1.8 V	DO	PCM data output
26	PCM_SYNC	1.8 V	DI	PCM_SYNC	1.8 V	DO	PCM data frame sync
27	PCM_CLK	1.8 V	DI	PCM_CLK	1.8 V	DO	PCM clock
28	SDIO1_DATA3	3.2 V	DIO	RESERVED	-	-	1. SDIO data bit 3 2. -

29	SDIO1_DATA2	3.2 V	DIO	RESERVED	-	-	1. SDIO data bit 2 2. -
30	SDIO1_DATA1	3.2 V	DIO	RESERVED	-	-	1. SDIO data bit 1 2. -
31	SDIO1_DATA0	3.2 V	DIO	RESERVED	-	-	1. SDIO data bit 0 2. -
32	SDIO1_CLK	3.2 V	DO	RESERVED	-	-	1. SDIO clock 2. -
33	SDIO1_CMD	3.2 V	DIO	RESERVED	-	-	1. SDIO command 2. -
34	SDIO1_VDD	3.2 V	PO	RESERVED	-	-	1. SDIO power supply 2. -
35	ANT_BT/WIFI_SCAN	-	AIO/AI	ANT_BT	-	AIO	1. The shared antenna interface of Bluetooth and Wi-Fi Scan 2. Bluetooth antenna interface
36	GND	-	-	GND	-	-	-
41	I2C_SCL	1.8 V	OD	I2C1_SCL	1.8 V	OD	I2C serial clock
42	I2C_SDA	1.8 V	OD	I2C1_SDA	1.8 V	OD	I2C serial data
43	ADC2	0–VBAT_BB	AI	ADC2	0–VBAT_BB	AI	General-purpose ADC interface
44	ADC1	0–VBAT_BB	AI	ADC1	0–VBAT_BB	AI	General-purpose ADC interface
45	ADC0	0–VBAT_BB	AI	ADC0	0–VBAT_BB	AI	General-purpose ADC interface
46	GND	-	-	GND	-	-	-
47	ANT_GNSS	-	AI	ANT_GNSS	-	AI	GNSS antenna interface

48	GND	-	-	GND	-	-	-
49	ANT_MAIN	-	AIO	ANT_MAIN/WIFI_SCAN	-	AIO/AI	1. Main antenna interface 2. LTE/Wi-Fi Scan antenna interface
50–54	GND	-	-	GND	-	-	-
56	GND	-	-	GND	-	-	-
57, 58	VBAT_RF	3.3–4.3 V	PI	VBAT_RF	3.3–4.3 V	PI	Power supply for module's RF part
59, 60	VBAT_BB	3.3–4.3 V	PI	VBAT_BB	3.3–4.3 V	PI	Power supply for module's baseband part
61	STATUS	1.8 V	DO	STATUS	1.8 V	DO	Indicate the module's operation status
62	MAIN_RI	1.8 V	DO	MAIN_RI	1.8 V	DO	Main UART ring indication
63	MAIN_DCD	1.8 V	DO	MAIN_DCD	1.8 V	DO	Main UART data carrier detection
64	MAIN_CTS	1.8 V	DO	MAIN_CTS	1.8 V	DO	Clear to send signal from the module
65	MAIN_RTS	1.8 V	DI	MAIN_RTS	1.8 V	DI	request to send signal to the module
66	MAIN_DTR	1.8 V	DI	MAIN_DTR	1.8 V	DI	Main UART data terminal ready
67	MAIN_TXD	1.8 V	DO	MAIN_TXD	1.8 V	DO	Main UART transmit
68	MAIN_RXD	1.8 V	DI	MAIN_RXD	1.8 V	DI	Main UART receive
69	USB_DP	-	AIO	USB_DP	-	AIO	USB 2.0 differential data (+)
70	USB_DM	-	AIO	USB_DM	-	AIO	USB 2.0 differential data (-)
71	USB_VBUS	3.5–5.25 V	AI	USB_VBUS	3.5–5.25 V	AI	USB connection detect

72	GND	-	-	GND	-	-	-
73	LOUDSPK_P	-	AO	SPK_P	-	AO	1. Loudspeaker differential output (+) 2. Analog audio differential output (+)
74	LOUDSPK_N	-	AO	SPK_N	-	AO	1. Loudspeaker differential output (-) 2. Analog audio differential output (-)
75	MIC_P	-	AI	MIC_P	-	AI	Microphone analog input (+)
76	GND	-	-	GND	-	-	-
77	MIC_N	-	AI	MIC_N	-	AI	Microphone analog input (-)
85–112	GND	-	-	GND	-	-	-
115	USB_BOOT	1.8 V	DI	USB_BOOT	1.8 V	DI	1. Active high 2. Active low
126	GPIO1	1.8 V	DO	CP_LOG	1.8 V	DO	CP log output
128	USIM2_VDD	1.8/3.0 V	PO	USIM2_VDD	1.8/3.0 V	PO	USIM2 card power supply
137	AUX_RXD	1.8 V	DI	AUX_RXD	1.8 V	DI	Auxiliary UART receive
138	AUX_TXD	1.8 V	DO	AUX_TXD	1.8 V	DO	Auxiliary UART transmit
139	BT_EN	1.8 V	-	BT_EN	1.8/3.2 V	DO	1. Reserved 2. Bluetooth enable control
141	I2C2_SCL	1.8 V	OD	I2C2_SCL	1.8 V	OD	I2C serial clock
142	I2C2_SDA	1.8 V	OD	I2C2_SDA	1.8 V	OD	I2C serial data
143	GRFC1	-	DIO	RESERVED	-	-	1. Generic RF controller 2. -

144	GRFC2	-	DIO	RESERVED	-	-	1. Generic RF controller 2. -
18, 37–40, 55, 78–84, 113, 114, 116–125, 127, 129–136, 140	RESERVED	-	-	RESERVED	-	-	-

NOTE

Pins in blue: the compatible pins on EC200U series and EC200G-CN with different functions or voltage.

4 Hardware Interface Design

The following sections only briefly outline the differences. For more details, see ***documents [1]***, ***[2]***, ***[3]*** and ***[4]***.

4.1. Power Supply

To avoid ripples and surges and ensure the stability of module power supply, add a high-power rated TVS at the front of the power supply.

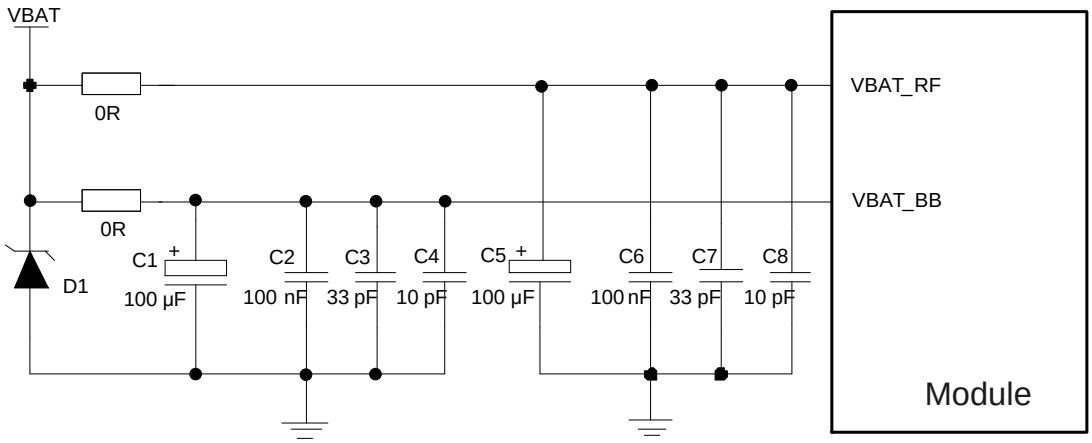

Figure 3: Reference Design of Power Supply

Module power supply design is critical to its performance. EC200U series that supports only LTE network requires sufficient current of at least 2.0 A, whereas the module that supports GSM network requires sufficient current of at least 3.0 A. EC200G-CN requires sufficient current of at least 2.0 A.

4.2. Turn On/Off

The modules can be turned on/off by pressing PWRKEY for a certain time.

4.2.1. Turn On

Reference circuits for turning on the modules are presented in the figures below.

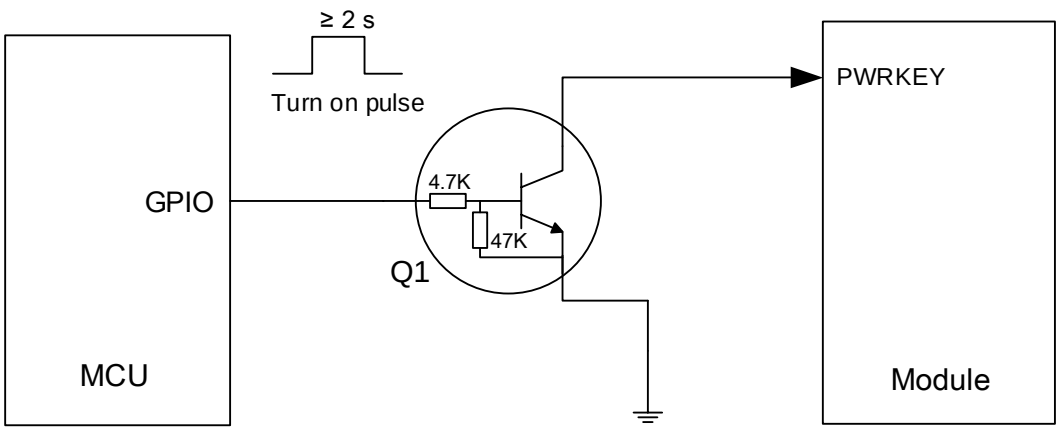

Figure 4: Reference Circuit for Turning On Module with Driving Circuit

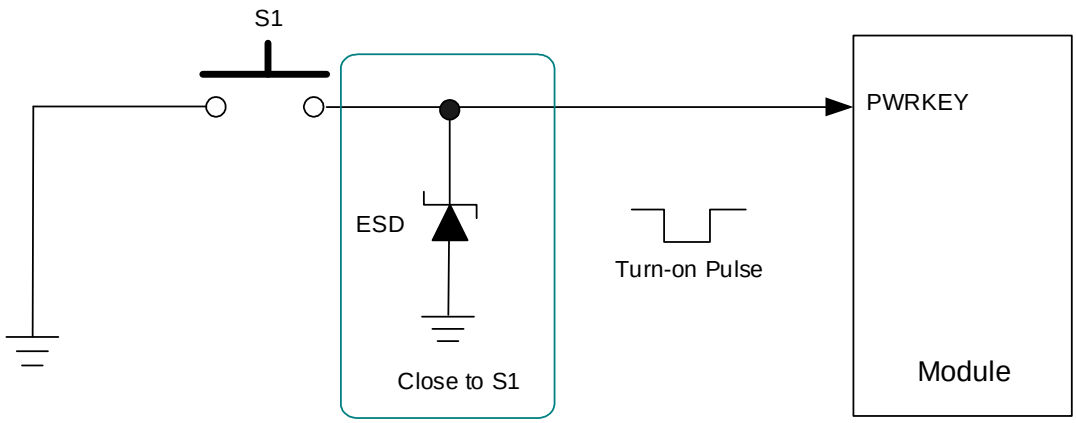

Figure 5: Reference Circuit for Turning On Module with Button

The turn-on timing of EC200U series and EC200G-CN is illustrated in the figures below.

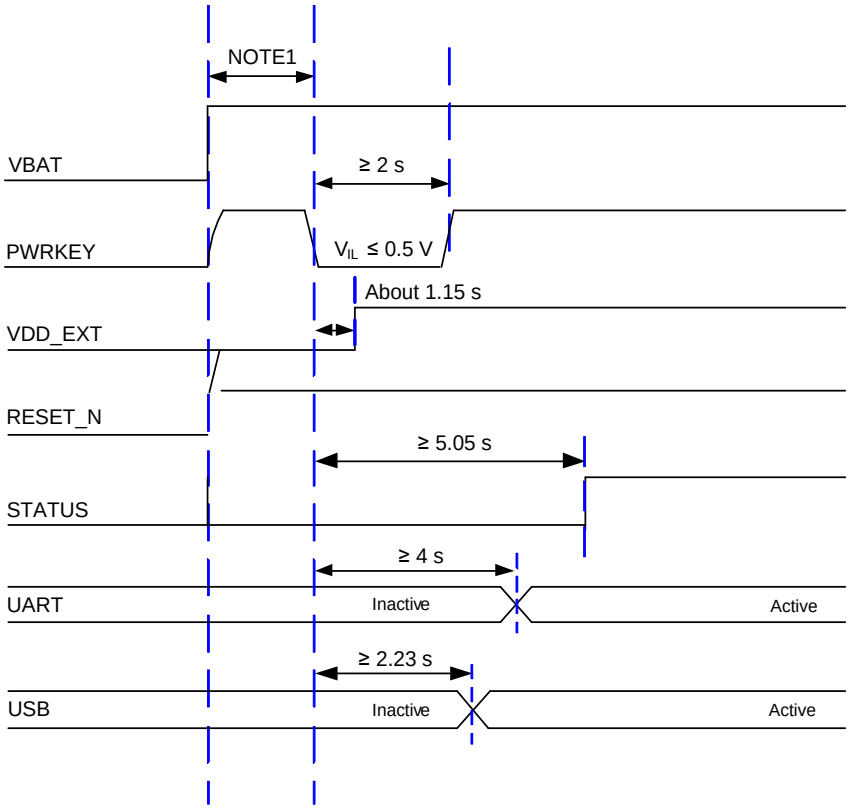

Figure 6: Turn-on Timing (EC200U Series)

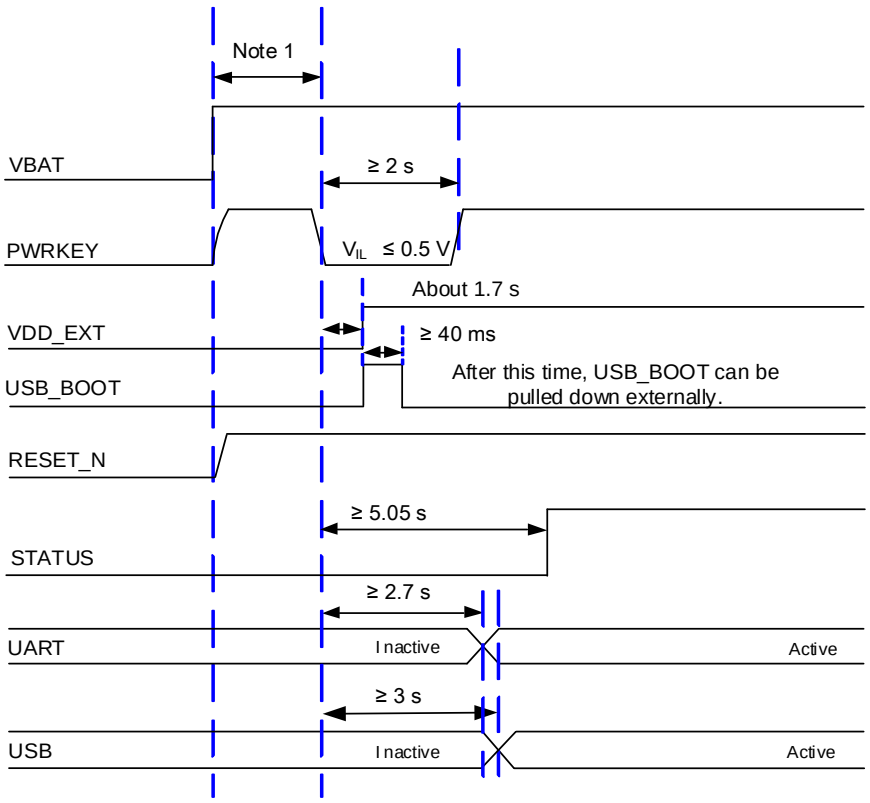

Figure 7: Turn-on Timing (EC200G-CN)

NOTE

1. Ensure a stable VBAT for at least 30 ms before driving the PWRKEY low.
2. For automatic module startup without a turn-off function, PWRKEY can be directly connected to ground with a recommended resistor under 1 kΩ.
3. Consider the following startup scenarios:
   - If USB_VBUS is connected first (or always connected) and VBAT is powered up, wait for at least 2 s for VBAT to stabilize, then drive PWRKEY low to turn on the module.
   - If VBAT is powered up first (or always powered up) and USB_VBUS is connected, wait for at least 2 s for USB_VBUS to be connected, then drive PWRKEY low to turn on the module.

4.2.2. Turn Off

4.2.2.1. Turn Off with PWRKEY

To initiate the power-down procedure and turn off the modules, drive PWRKEY to low level for at least 3 s and then release it.

4.2.2.2. Turn Off with AT Command

The modules can also be safely turned off with **AT+QPOWD**, which is similar to shutdown via PWRKEY pin. See ***documents [5]*** and ***[6]*** for details about **AT+QPOWD**.

4.3. Reset

The modules can be reset by driving RESET_N pin to low level for at least 100 ms, which should be used only in case of **AT+QPOWD** and PWRKEY pin failure.

4.4. (U)SIM Interfaces

The modules provide two (U)SIM interfaces, and support the DSDS [6] function. These (U)SIM interfaces comply with ETSI and IMT-2000 requirements, supporting both 1.8 V and 3.0 V (U)SIM cards. Contact Quectel Technical Support for details.

Table 7: Pin Difference of (U)SIM Interfaces

Pin No.	EC200U Series	EC200G-CN	Comment
14	USIM_VDD	USIM1_VDD	Either 1.8 V or 3.0 V (U)SIM card is supported and can be identified automatically by the module.
10	USIM_GND	USIM_GND	Connect to the ground of (U)SIM card connector.
15	USIM_DATA	USIM1_DATA	1.8/3.0 V
16	USIM_CLK	USIM1_CLK	
17	USIM_RST	USIM1_RST	
13	USIM_DET	USIM1_DET	1.8 V power domain. If unused, keep it open.

[6] For EC200U series, the DSDS function requires customized software, and please consult Quectel Technical Support for details.

NOTE

1. The (U)SIM2 function is optional. The relevant (U)SIM2 card functions can be achieved by multiplexing AP_READY, WAKEUP_IN, SLEEP_IND, and W_DISABLE# pins. For details, contact Quectel Technical Support.
2. EC200U series supports both SIM and USIM cards, while EC200G-CN only supports USIM card.

4.5. PCM Interface and I2C Interfaces

The modules provide one PCM interface and two I2C interfaces.

For EC200U series, PCM interface supports only slave mode. Therefore, an external clock should be provided for the codec.

For EC200G-CN, PCM interface supports only master mode.

Table 8: Pin Definition of PCM Interface for EC200U Series

Pin Name	Pin No.	I/O	Description	Comment
PCM_DIN	24	DI	PCM data input	1.8 V power domain. If unused, keep it open.
PCM_DOUT	25	DO	PCM data output	
PCM_SYNC	26	DI	PCM data frame sync	
PCM_CLK	27	DI	PCM clock	

Table 9: Pin Definition of PCM Interface for EC200G-CN

Pin Name	Pin No.	I/O	Description	Comment
PCM_DIN	24	DI	PCM data input	1.8 V voltage domain. If unused, keep them open.
PCM_DOUT	25	DO	PCM data output	
PCM_SYNC	26	DO	PCM data frame sync	
PCM_CLK	27	DO	PCM clock	

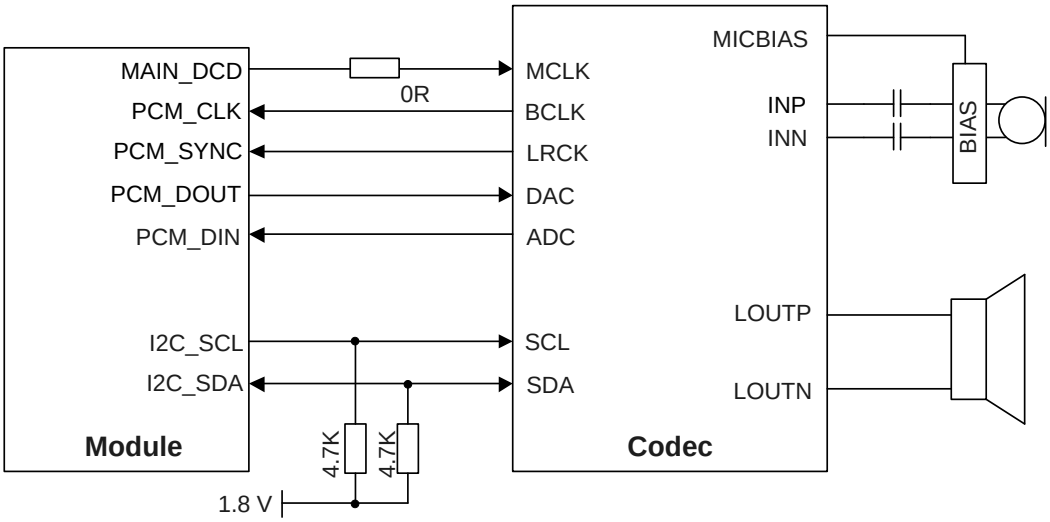

Figure 8: Reference Circuit of PCM Application with Audio Codec (EC200U Series)

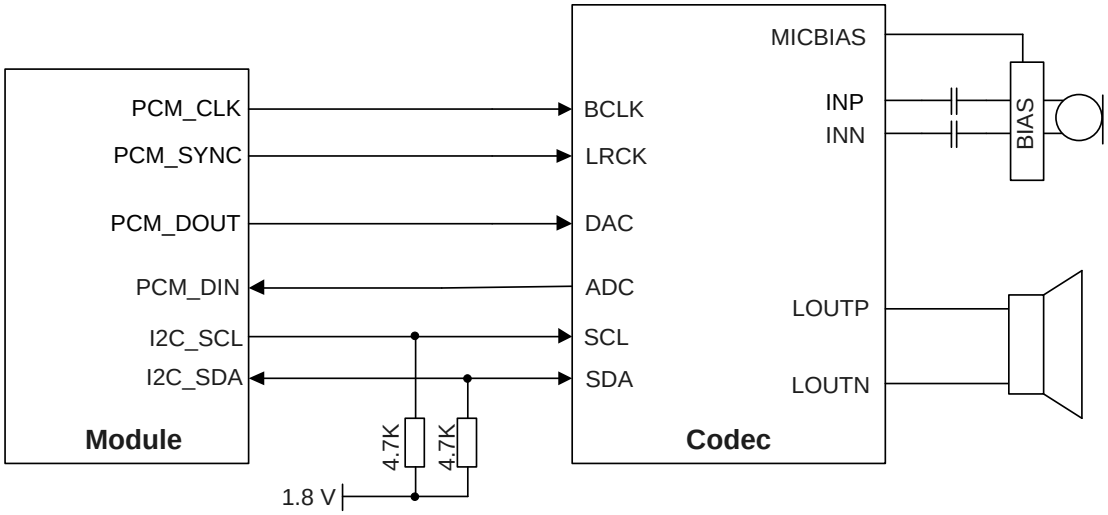

Figure 9: Reference Circuit of PCM Application with Audio Codec (EC200G-CN)

NOTE

1. It is recommended to reserve a RC (R = 0 Ω, C = 33 pF) circuit on the PCM traces, especially for PCM_CLK.
2. For EC200G-CN, the built-in codec chip is optional. Since the PCM interface of the built-in codec chip and the PCM interface of the module share the same channel, when using the built-in codec chip function, the PCM interface of the module cannot be used and the pins should be kept open.
3. For EC200U series, if MAIN_DCD pin provides the clock signal for the audio codec chip, it cannot

be used for other functions.

4. The I2C interfaces support simultaneous connection of multiple peripherals except for codec IC. In other words, if a codec IC is already connected to the I2C bus, no other peripherals can be connected; if there is no codec IC on the bus, multiple peripherals can be connected.

4.6. UART Interfaces

The modules provide three UART interfaces: main UART, debug UART and auxiliary UART.

Table 10: Pin Difference of Debug UART

Pin No.	EC200U Series	EC200G-CN	Comment
11	DBG_RXD	DBG_RXD	**EC200U series:** Supports only 921600 bps baud rate **EC200G-CN:** Supports 2 Mbps baud rate
12	DBG_TXD	DBG_RXD	

4.7. SD Card Interface

The EC200U series supports SD 2.0 interface for SD card but the EC200G-CN does not.

Table 11: Pin Difference of SD Card Interface

Pin No.	EC200U Series	EC200G-CN
23	SD_DET	RESERVED
28	SDIO1_DATA3	RESERVED
29	SDIO1_DATA2	RESERVED
30	SDIO1_DATA1	RESERVED
31	SDIO1_DATA0	RESERVED
32	SDIO1_CLK	RESERVED
33	SDIO1_CMD	RESERVED

34	SDIO1_VDD	RESERVED

NOTE

The EC200G-CN in QuecOpen solution supports SD card interface. See ***document [7]*** for details.

4.8. ADC Interfaces

The modules provide three ADC interfaces. To improve ADC accuracy, the traces of ADC interfaces should be surrounded by ground.

4.9. USB Interface

The modules provide one USB interface that complies with the USB 2.0 specification and supports both high-speed (480 Mbps) and full-speed (12 Mbps) communication. The USB interface supports only slave mode and can be used for AT command communication, data transmission, software debugging and firmware upgrade.

4.10. Analog Audio Interface

The modules provide one analog audio input channel and one analog audio output channel.

EC200U series analog output channel is a differential output with a built-in power amplifier. The default configuration of power amplifier is Class AB and the maximum driving power is 500 mW for 8 Ω load. When PA is configured as Class D, the maximum driving power is 800 mW for 8 Ω load.

Since the output power of EC200G-CN is relatively low, if it does not meet the demand, an external audio power amplifier is needed to boost the signal.

Table 12: Pin Difference of Analog Audio Interface

Pin No.	EC200U Series	EC200G-CN
73	LOUDSPK_P	SPK_P
74	LOUDSPK_N	SPK_N
75	MIC_P	MIC_P
77	MIC_N	MIC_N

NOTE

For EC200G-CN, the analog audio function is optional. For more details, contact Quectel Technical Support.

4.11. Emergency Download Interface

The modules provide an emergency download interface.

Table 13: Pin Difference of Emergency Download Interface

Pin No.	EC200U Series	EC200G-CN	Comment
115	USB_BOOT	USB_BOOT	**EC200U series:** Active high **EC200G-CN:** Active low

NOTE

1. EC200U series: Pull USB_BOOT up to 1.8 V before powering VDD_EXT to enter emergency download mode.
2. EC200G-CN: Pull USB_BOOT down to GND before turning on the module to enter emergency download mode.
3. EC200G-CN: If the emergency download function is not used, do not pull it to low level or high level and keep it open before the module is successfully turned on.

4.12. Network Status Indication

There are two network status indication pins, which are defined below.

Table 14: Pin Definition of EC200U Series

Pin Name	Pin No.	I/O	Description	Comment
NET_MODE	5	DO	Indicate the module's network activity status	1.8 V power domain. If unused, keep them open.
NET_STATUS	6	DO	Indicate the module's network registration mode	

Table 15: Pin Definition of EC200G-CN

Pin Name	Pin No.	I/O	Description	Comment
NET_MODE	5	DO	Indicates the module's network registration mode	1.8 V power domain. If unused, keep them open.
NET_STATUS	6	DO	Indicates the module’s network activity status	

Table 16: Network Status Indication and Module Network Status (EC200U Series)

Pin Name	Level Status	Network Status
NET_STATUS	Always high	Registered on LTE network
	Always low	Others
NET_MODE	Slow flickering (200 ms high/1800 ms low)	Network searching
	Rapid flickering (234 ms high/266 ms low)	Idle
	Fast flashing (62 ms high/63 ms low)	Data transfer is ongoing
	Always high	Voice calling

Table 17: Network Status Indication and Module Network Status (EC200G-CN)

Pin Name	Level Status	Network Status
NET_MODE	Always high	Registered on LTE network
	Always low	Others
NET_STATUS	Slow flickering (200 ms high/1800 ms low)	Network searching
	Slow flickering (1800 ms high/200 ms low)	Idle
	Rapid flickering (125 ms high/125 ms low)	Data transmission is ongoing

NOTE

NET_STATUS and NET_MODE pins of EC200U series exhibit opposite behavior compared to EC200G-CN module. For details, see the corresponding hardware design documents.

4.13. Antenna Interfaces

Appropriate antenna type and design should be used with matched antenna parameters according to specific application. It is required to perform a comprehensive functional test for the RF design before mass production of terminal products. The entire content of this chapter is provided for illustration only. Analysis, evaluation and determination are still necessary when designing target products.

Table 18: Antenna Pin Definition of EC200U Series

Pin Name	Pin No.	I/O	Description	Comment
ANT_MAIN	49	AIO	Main antenna interface	50 Ω impedance.
ANT_BT/WIFI_SCAN	35	AIO/AI	Shared antenna interface of Bluetooth and Wi-Fi Scan	Bluetooth and Wi-Fi Scan cannot be used simultaneously; Wi-Fi Scan antenna can only receive. 50 Ω impedance. If unused, keep it open.
ANT_GNSS	47	AI	GNSS antenna interface	50 Ω impedance. If unused, keep it open.

Table 19: Antenna Pin Definition of EC200G-CN

Pin Name	Pin No.	I/O	Description	Comment
ANT_MAIN/WIFI_SCAN	49	AIO /AI	LTE/Wi-Fi Scan antenna interface	50 Ω impedance. If unused, keep them open.
ANT_BT	35	AIO	Bluetooth antenna interface	
ANT_GNSS	47	AI	GNSS antenna interface	

It is recommended to reserve a Π-type matching circuit for better RF performance, and the Π-type matching components (R1, C1, C2 and R2, C3, C4) should be placed as close to the antenna as possible. The capacitors are not mounted by default.

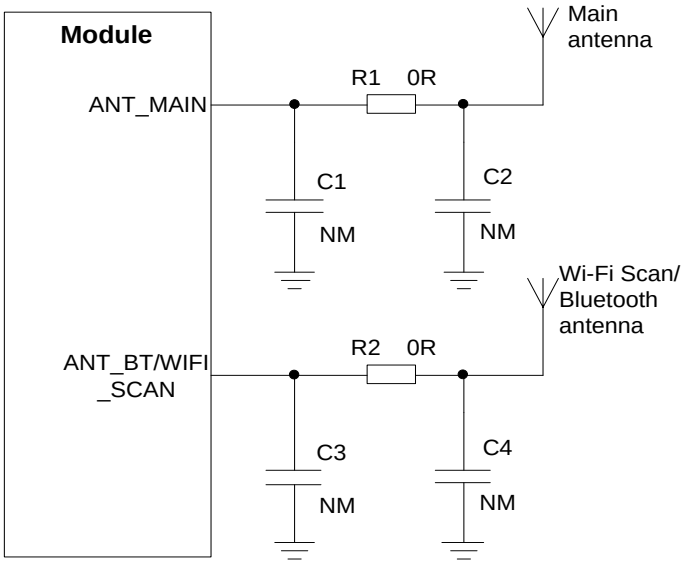

Figure 10: RF Antenna Interfaces (EC200U Series)

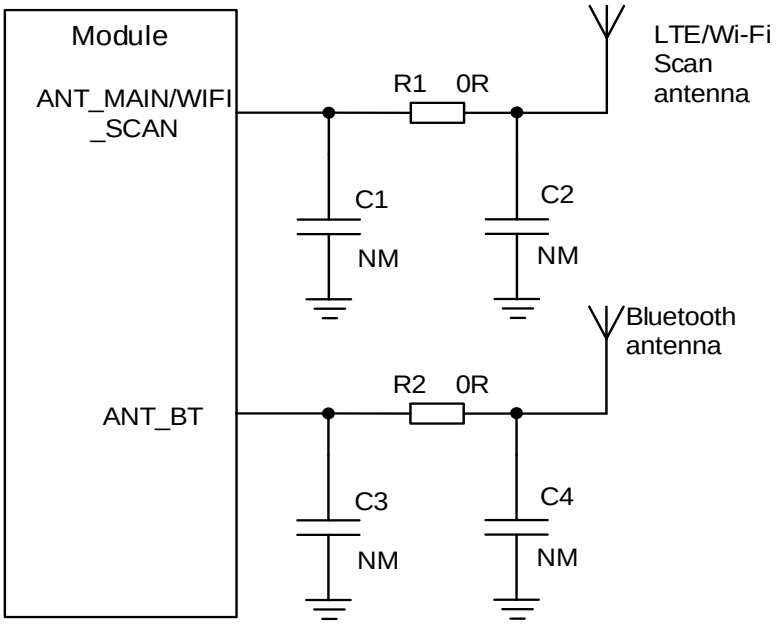

Figure 11: RF Antenna Interfaces (EC200G-CN)

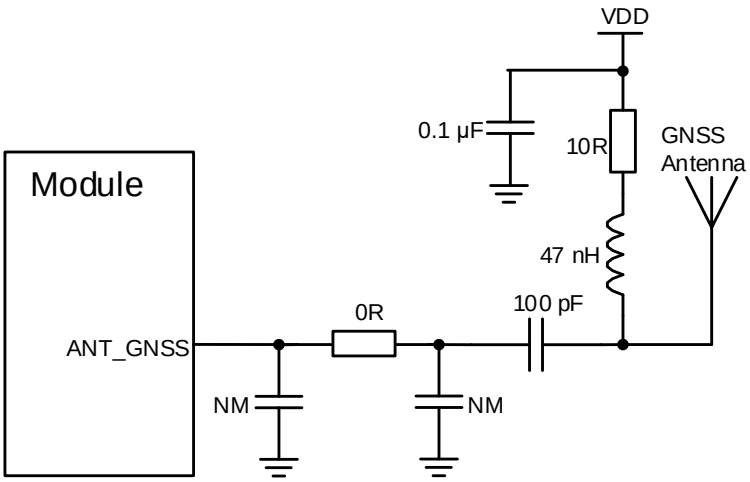

Figure 12: GNSS Antenna Interface Reference Circuit

NOTE

1. EC200U series supports Bluetooth and Wi-Fi Scan functions. Due to the shared antenna interface, the two functions cannot be used simultaneously. Additionally, Bluetooth and Wi-Fi Scan functions are optional. Contact Quectel Technical Support for details.
2. Bluetooth is optional for EC200G-CN. Wi-Fi Scan utilizes the same antenna as the main antenna. The two functions cannot be used simultaneously, and Wi-Fi Scan only supports receiving.

5 Mechanical Information

This chapter mainly outlines the recommended footprint and stencil design for the modules. All dimensions are measured in mm, and the default tolerance for dimensions without specified values are ±0.2 mm.

5.1. Recommended Compatible Footprint

The bottom view of the module is represented in the following figure.

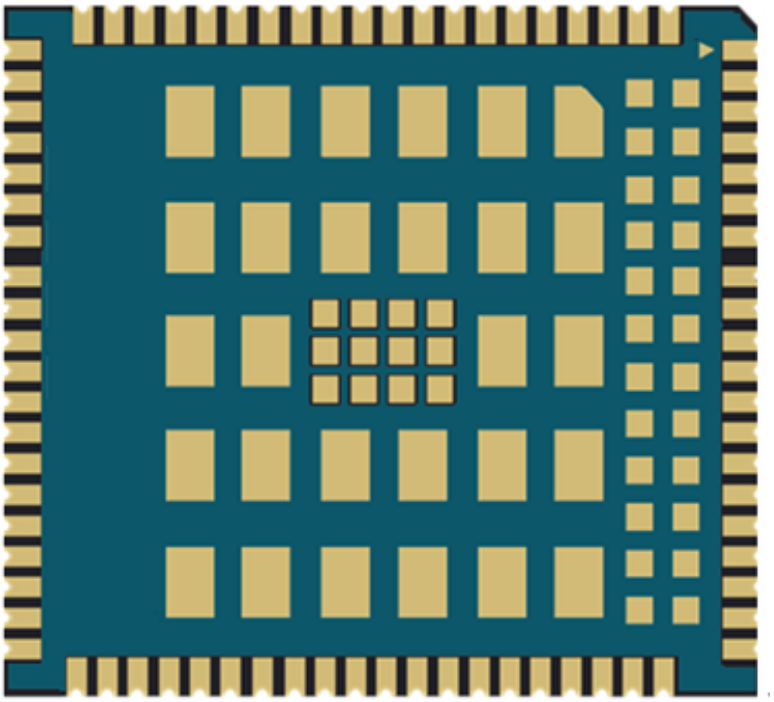

Figure 13: Bottom View

The following figure shows the recommended compatible footprint of EC200U series and EC200G-CN.

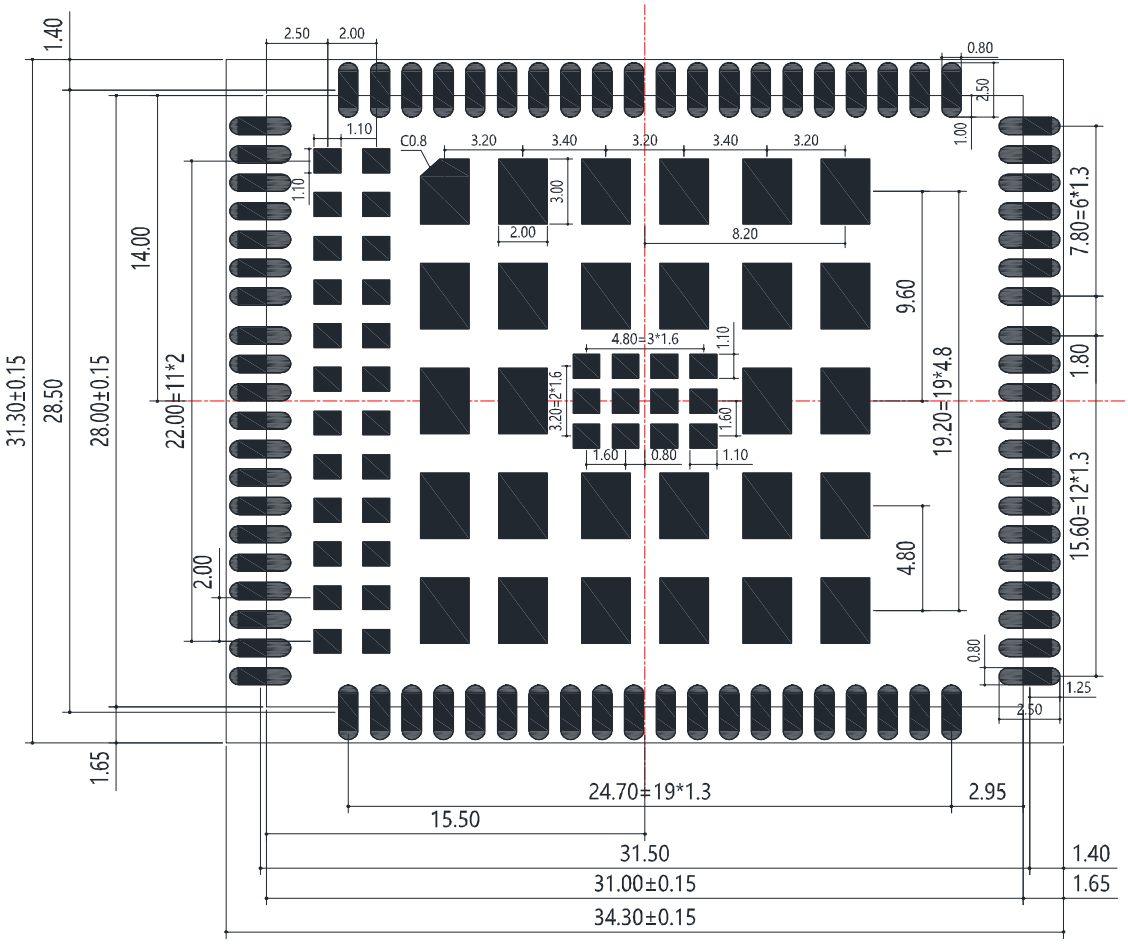

Figure 14: Recommended Footprint

NOTE

Keep at least 3 mm between the module and other components on the motherboard to improve soldering quality and maintenance convenience.

5.2. Sketch Map Installation

The following figure shows the sketch map of installation among EC200U series and EC200G-CN.

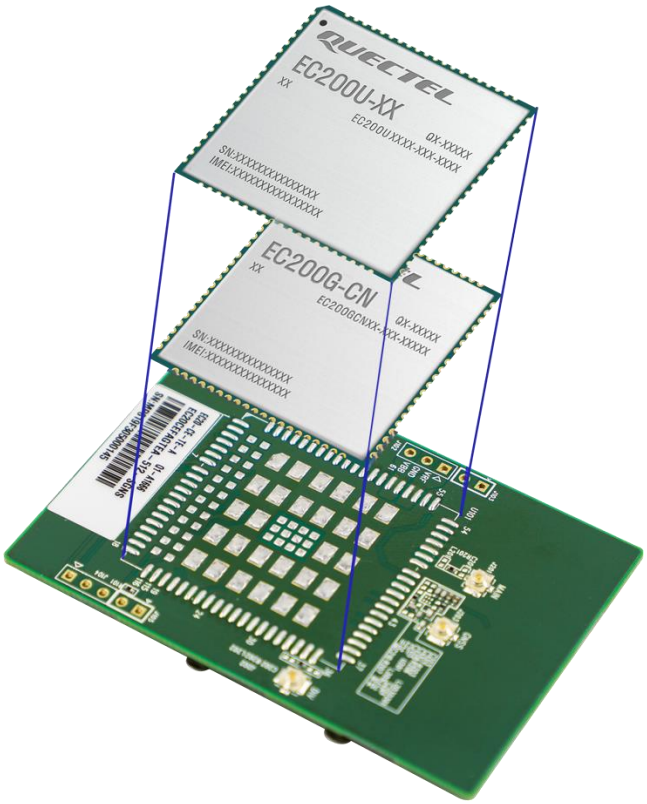

Figure 15: Installation Sketch Map

6 Appendix References

Table 20: Related Documents

Document Name	
[1]	Quectel_EC200U_Series_Hardware_Design
[2]	Quectel_EC200G-CN_Hardware_Design
[3]	Quectel_EC200U_Series_Reference_Design
[4]	Quectel_EC200G-CN_Reference_Design
[5]	Quectel_EC200D&ECx00G&EC600U&EG800G_Series_AT_Commands_Manual
[6]	Quectel_EC200U&EG91xU_Series_AT_Commands_Manual
[7]	Quectel_EC200G-CN_QuecOpen_Hardware_Design

Table 21: Terms and Abbreviations

Abbreviation	Description
DSDS	Dual SIM Dual Standby
ETSI	European Telecommunications Standards Institute
FDD	Frequency Division Duplex
GNSS	Global Navigation Satellite System
GPRS	General Packet Radio Service
GSM	Global System for Mobile Communications
IMT-2000	International Mobile Telecommunications 2000
LGA	Land Grid Array

LTE	Long Term Evolution
PCB	Printed Circuit Board
PCM	Pulse Code Modulation
RF	Radio Frequency
SMS	Short Message Service
TDD	Time Division Duplexing
USB	Universal Serial Bus
(U)SIM	(Universal) Subscriber Identity Module