Engineering Release Notice (ERN)	Location	Change description	A=Added D=Deleted	V=Vas	Document release status
					Date / Modification count

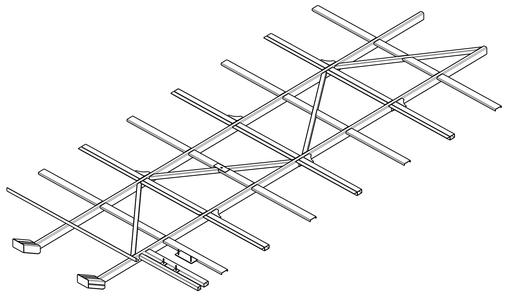

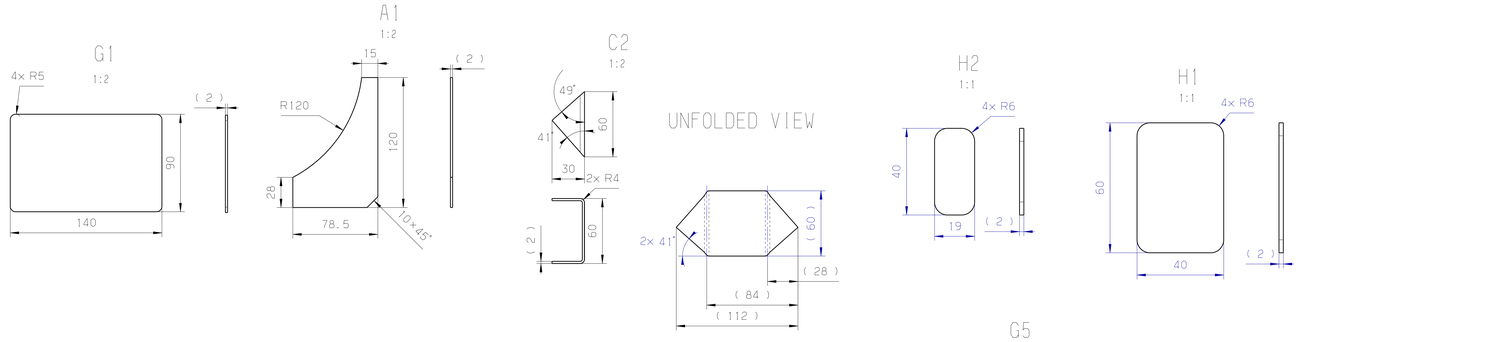

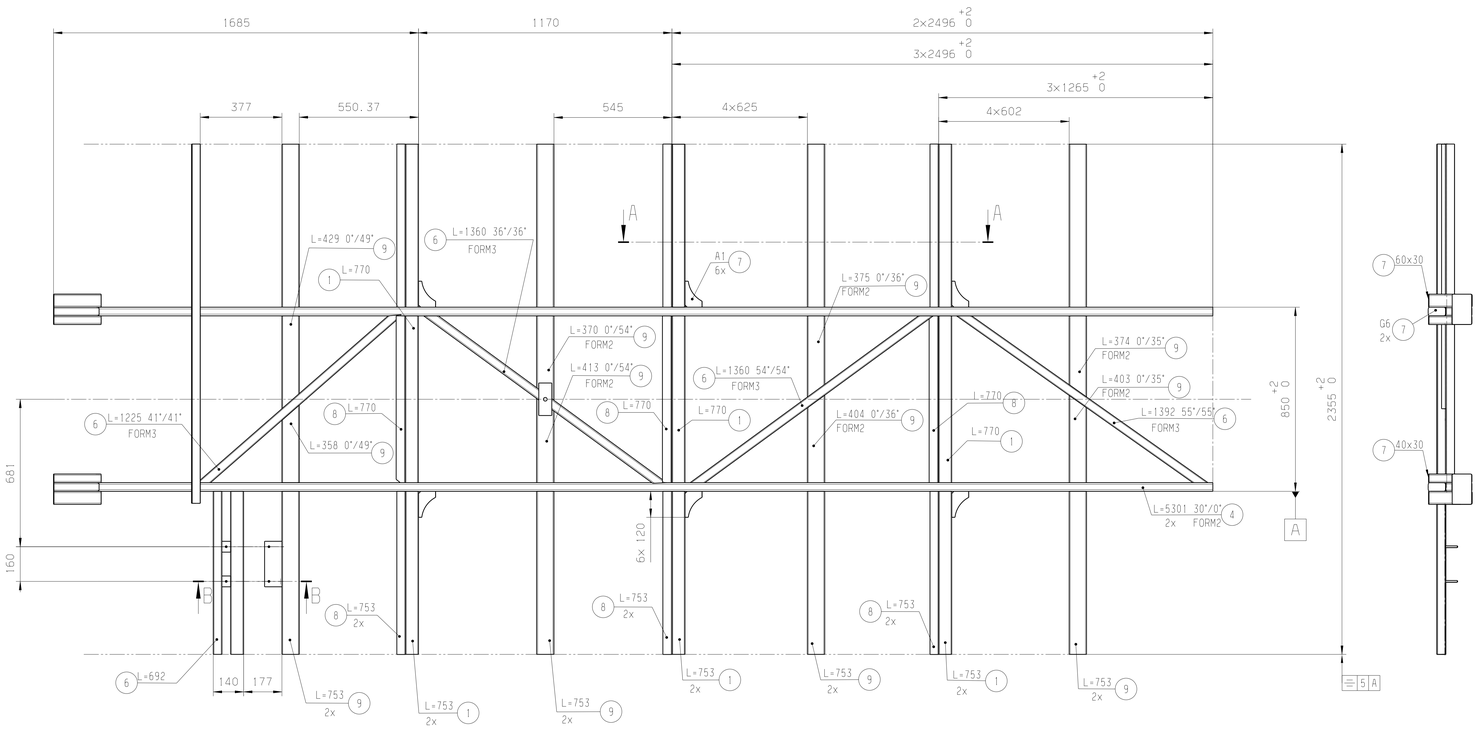

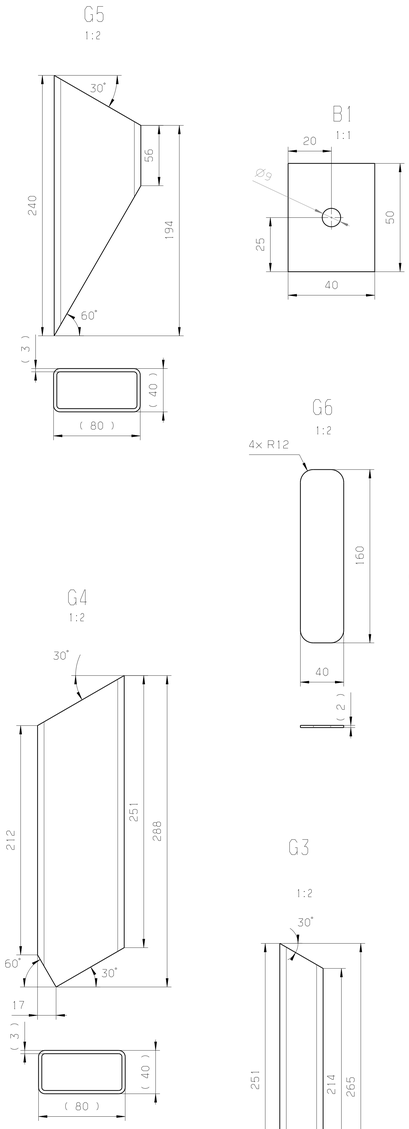

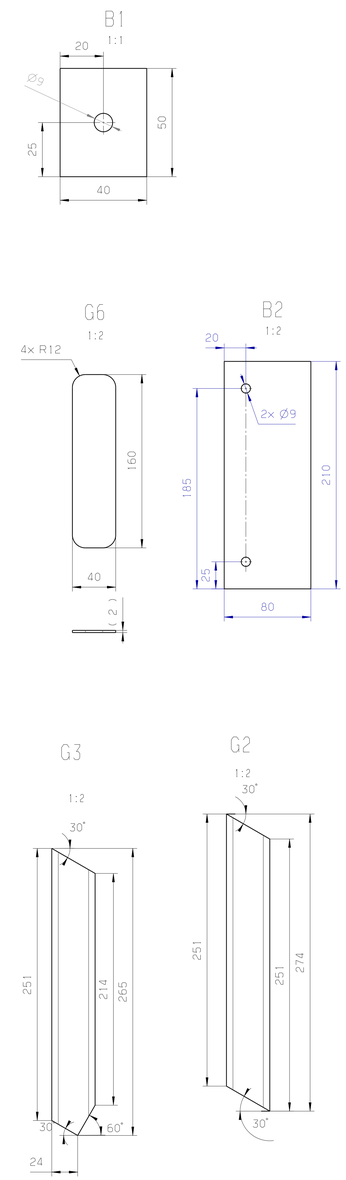

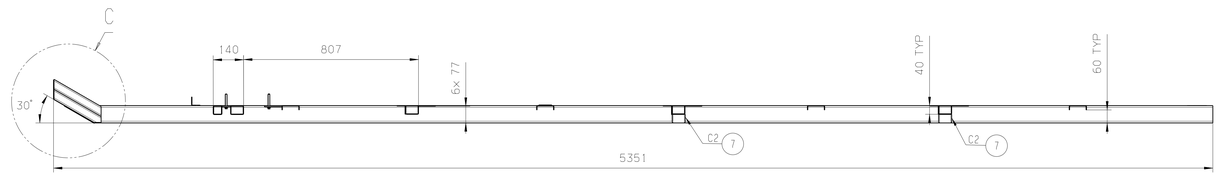

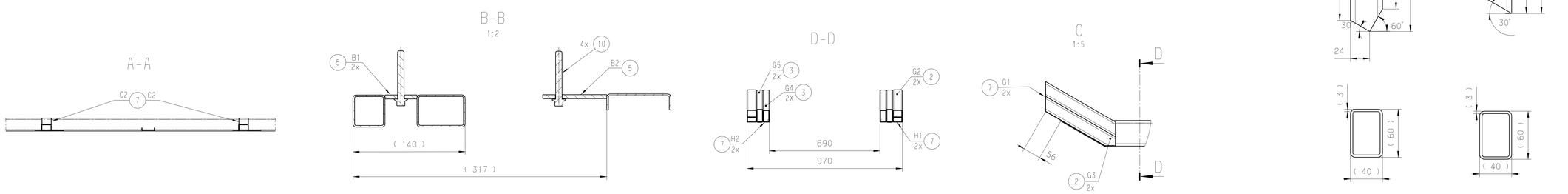

TOLERANCES UNLESS OTHERWISE STATED SS-ISO 2768-1-c

SCALE: 1:10

MAIN INFORMATION OF THE PART:
SEE PART VERSION REPORT

SYMBOLS, DESIGNATIONS AND GENERAL DRAWING METHODS
STD 101-0005

METHOD E. FIRST ANGLE PROJECTION METHOD

The copying, distribution and utilization of this document as well as the communication of its contents to others without expressed authorization is prohibited. Offenders will be held liable for payment of damages. All rights reserved in the event of the grant of a patent, utility model or ornamental design registration.

VOLVO
Volvo Bus Corporation

Document title			
FRAME BOTTOM, M, FRAME, VL13.7 B11R;HANS;SLEEPER SHELL			
Document type			
Owner domain;Document prefix			
Document No	Issue index	Sheet No	
23315357	01	1/2	

VBC FORMAT A0 ISSUE C