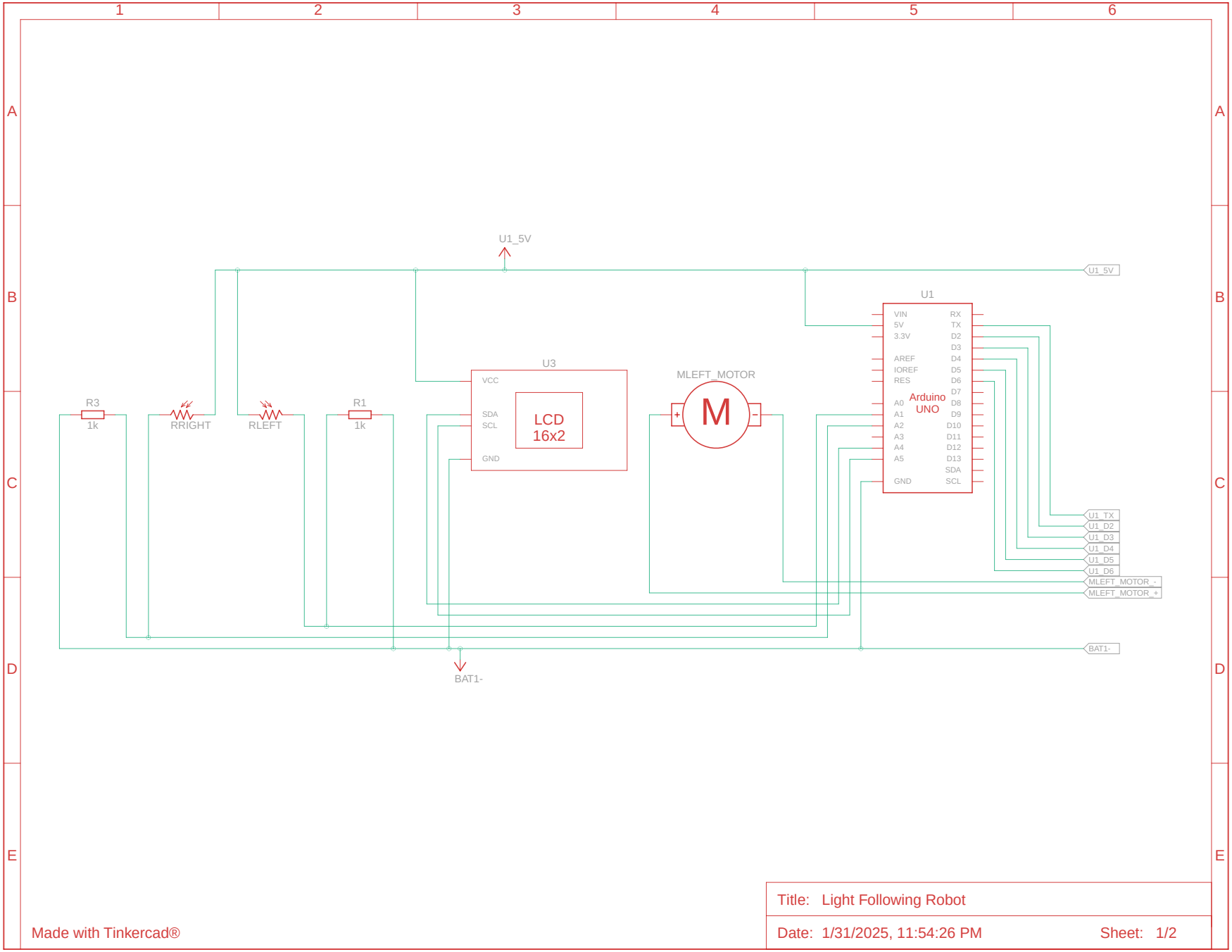

Made with Tinkercad®

Title: Light Following Robot	
Date: 1/31/2025, 11:54:26 PM	Sheet: 1/2

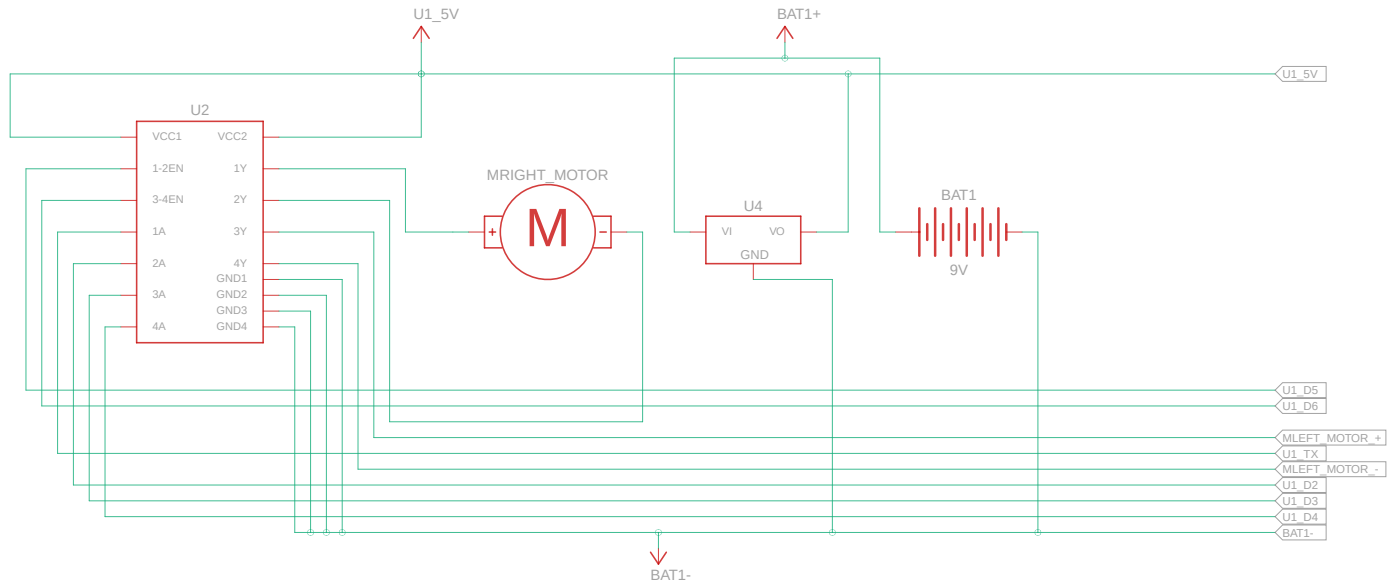

Made with Tinkercad®

Title: Light Following Robot	
Date: 1/31/2025, 11:54:26 PM	Sheet: 2/2