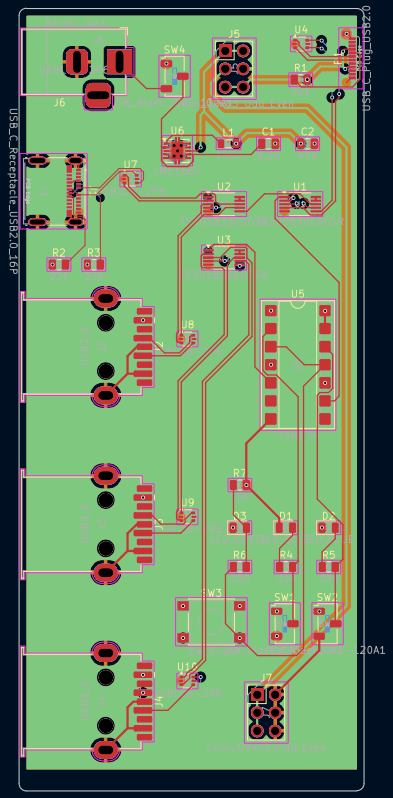

Sheet:
File: usb-demux1.kicad_pcb

Title: Switching USB Hub – Surya Turaga

Size: A4	Date: 4 June 2025	Rev:
KiCad E.D.A. 9.0.0		Id: 1/1