Text-Guided Diffusion for High-Fidelity Data Generation

Literature Review

Susheel Utagi (22502356)

Supervisors: Prof. Wei Liu, Prof. Du Huynh

Degree: Bachelor of Advanced Computer Science (Honours)

The University of Western Australia

October 19, 2025

Abstract

The rapid progress of diffusion models has opened new possibilities for generating high-quality synthetic data that can help overcome the challenges in acquiring labelled data in machine learning. This literature review examines the evolution of diffusion-based generative models, focusing on their use for controllable and semantically guided data generation. In particular, we explore *text-guided diffusion* as a framework for producing realistic and diverse image and audio samples that align with natural language descriptions. The review traces the development of guidance mechanisms from classifier-based and classifier-free methods to latent diffusion, highlighting how contrastive multimodal encoders enable stronger text–image and text–audio alignment. While the primary focus of this review is on text-guided diffusion for image generation, a brief discussion is also included on its extension to audio through contrastive language–audio models.

1 The Data Bottleneck

1.1 Challenges in Data Availability and Quality

Supervised machine learning (ML) for classification uses labelled data to train models to automate tasks and often outperform humans. The expressive power of modern models can grow almost without limit, but their performance remains constrained by the availability of sufficient, accurately labelled training data. The labels define the ground-truths which models aim to correctly replicate through training, so wrongly labelled data introduces serious systematic error in downstream learning tasks. For this reason, labelled training data is usually curated manually, which is both time-consuming and costly. There is also a risk that the curated data lacks diversity and fidelity which introduces potentially unwanted bias and hampers generalisation. Collecting and annotating large-scale, high-quality data can be unfeasible and is a problem referred to as the *data bottleneck*.

1.2 Early Data Engineering and Augmentation Techniques

Advances in generative AI have introduced new data engineering and augmentation techniques that directly address this problem. Before these methods, data augmentation was limited to simple image transformations such as flipping, rotation, and colour adjustments as was introduced by Cubuk *et al.* [1]. While these operations slightly increase visual variety, they do not add any new semantic content to the dataset and therefore have little impact on improving model generalisation or downstream performance. Generative AI could be used to perform data augmentation by way of interpolating between existing data points, as introduced by Chawla *et al.* [2] with their Synthetic Minority Oversampling Technique (SMOTE) algorithm. This algorithm generates synthetic samples to restore balance among under-represented classes.

Synthetic data does not automatically resolve the data bottleneck. Models trained solely on this data often perform poorly when evaluated on real test data—a discrepancy known as the *reality gap*. Shrivastava *et al.* [3] showed that this gap can be reduced through adversarial refinement using a Generative Adversarial Network (GAN) framework, known as SimGAN. SimGAN adjusts synthetic images to appear more realistic while preserving ground-truth labels, thereby improving real-world model performance. Realism was evaluated qualitatively through visual inspection, where refined image samples exhibited smoother textures and more natural lighting. Quantitatively, accuracy improvements were shown on low-level structured tasks such as gaze and hand pose estimation rather than high-level classification. Although these tasks differ from those explored in this project, the study provided a valuable proof of concept that increasing photorealism can effectively narrow the reality gap.

In a contrasting yet constructive approach, Tremblay *et al.* [4] found that realism alone is not the primary factor influencing downstream model performance. Instead, they demonstrated that variability within the synthetic domain can be equally, if not more, effective in reducing the reality gap. The variability was achieved through randomisation of object textures, lighting conditions, camera poses, and scene layouts to create non-photorealistic variations that nonetheless encode useful structure for models to exploit. This *domain randomisation* strategy encouraged models to learn invariant, task-relevant features rather than overfitting to specific visual cues. Their object detection experiments, evaluated using mean Average Precision (mAP) on the using the KITTI [5] and COCO [6] datasets[1], showed that models trained solely on highly varied but non-photorealistic synthetic data generalised well to real-world imagery.

1.3 Limitations of GANs and Domain Randomisation

While both GAN refinement [3] and domain randomisation [4] took major steps in the realm of synthetic data generation, there were several limitations. Adversarial methods like SimGAN suffer from unstable training dynamics, and limited control over the generative process. It often requires extensive hyperparameter tuning to maintain convergence. Conversely, domain randomisation relies heavily on heuristic design choices and manual parametrisation. This becomes very difficult to work with for classification tasks across different domains. Both approaches therefore demand significant manual intervention and lack the stability, scalability,

[1] KITTI is a real-world driving dataset for 3D vision tasks, while COCO is a large-scale benchmark for object detection and segmentation.

and semantic consistency required for large-scale, controllable data generation. Thus motivating the development of diffusion-based generative models to help mitigate the data bottleneck.

2 Diffusion Models

2.1 De-noising Diffusion Probablistic Models

Diffusion models (DMs) represent a powerful class of generative frameworks that drive state-of-the-art systems such as DALL·E 2 and Stable Diffusion. Unlike earlier approaches such as GANs and Variational Auto Encoders (VAEs), which generate data in a single step, diffusion models learn to construct samples iteratively. A trained DM begins with a canvas of pure Gaussian noise (see x_T from Fig. 1) and progressively de-noises the sample till a clean sample emerges. This design demonstrated training stability and exceptional sample fidelity [7, 8].

The original formulation of this concept was inspired by non-equilibrium thermodynamics. Sohl-Dickstein *et al.* [7] proposed modelling data generation as the reversal of a physical diffusion process. Following on from this foundation, Ho *et al.* [8] introduced the De-noising Diffusion Probabilistic Model (DDPM), which formalised this idea into a tractable framework which is capable of generating images from pure noise. Training involves two complementary stages: a forward diffusion process, in which real data is gradually corrupted with noise, and a reverse diffusion process, in which the model learns to iteratively de-noise to generate new samples.

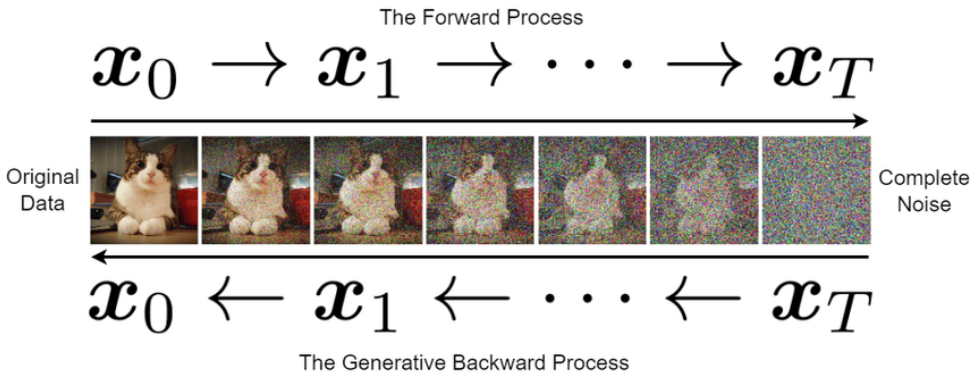

Figure 1: Illustration of the forward and reverse diffusion processes in DDPM, adapted from Ghojogh and Ghodsi [9].

2.1.1 Forward Diffusion Process

The forward diffusion process progressively corrupts a sample with Gaussian noise over a fixed number of timesteps. Starting from an initial sample x_0 (see Fig. 1), noise is incrementally added to get the next states $x_1, x_2, \ldots, x_T$ until the data approaches pure noise. The original DDPM used a linear noising schedule [2] (Fig. 2), which caused the underlying image to degrade too quickly at mid-to-late time-steps. Nichol and Dhariwal [10] replaced this with a *cosine noise schedule* (Fig. 3), which distributes noise more smoothly across the entire process.

[2] A noising schedule is the function defining the amount of noise added in each noising step.

This smoother schedule maintains a stronger signal-to-noise ratio for a longer portion of the diffusion trajectory, allowing the model to learn more stable and accurate reconstructions and also improving sample quality.

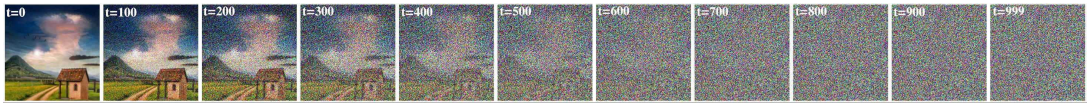

Figure 2: Linear noise schedule used by Ho *et al.* [8] in DDPM, where variance increases uniformly over time-steps. We observe poor signal preservation at intermediate steps. Image adapted from Erdem [11].

Figure 3: Cosine noise schedule introduced by Nichol and Dhariwal [10], which improved stability and coverage of intermediate noise levels. Image adapted from Erdem [11].

2.1.2 Reverse Diffusion Process

This is the generative stage where the model learns to remove noise from a sample x_T step by step until a clear image appears. At each step, the network predicts how much noise is present and removes a small part of it to yield a slightly cleaner sample x_{t-1} (Referring to Fig. 1). In doing so, it learns a *diffusion score* function, written as $s_\theta(x_t)$. This score tells the model which direction, in the latent space, to step so that the image progressively approximates a cleaner sample in the next time-step.

Nichol and Dhariwal [10] improved this process by introducing *learnable variance parameters* for each time-step, instead of keeping them fixed as in the original DDPM. These parameters control the amount of randomness added or removed at every de-noising step. Allowing the model to learn this variance made the reverse process more stable and expressive, which leads to sharper images and faster convergence. Once trained, the model can start from random noise and apply these learned steps to create new, realistic samples.

2.2 De-noising Diffusion Implicit Models

While DDPM improved stability and image quality, it still required hundreds of denoising steps to generate a single sample. This made it slow and impractical for large-scale dataset creation. To address this, Song *et al.* [12] introduced the *Denoising Diffusion Implicit Model (DDIM)*. DDIM keeps the same trained DDPM model but changes how sampling works. Instead of adding new randomness at each step, it follows a smooth, deterministic path from noise to image. This trajectory allows high-quality samples to be produced with far fewer steps. In practice, DDIM mainly speeds up sampling without changing the underlying model, but diffusion-based generation is still computationally heavy.

2.3 Latent Diffusion Models

Both DDPM and DDIM operate directly in pixel space, requiring the model to de-noise extremely high-dimensional data. For example, generating the RGB cat image x_0 in Fig. 1 requires modelling 27,000 pixel values ($96 \times 96 \times 3$). Even with fewer de-noising iterations, it remains unfeasible to directly use these models to interpolate large sets of data.

2.3.1 Benefits of Operating in Latent Space

Instead of operating in pixel space, later works proposed performing diffusion in a compressed *latent* space. Rombach *et al.* [13] trained a custom convolutional VAE to compress clean training images into this lower-dimensional space before noising and de-noising. The model learns to generate latent codes rather than pixel values and so the resulting latent is fed into the VAE decoder to reconstruct the final image. Quantitatively, the LDM achieved a Fréchet Inception Distance (FID)[3] of 3.60, matching that of DDPM (3.17) while requiring nearly 10× fewer de-noising steps. The memory and compute savings were around one to two orders of magnitude compared to the pixel-space DMs.

2.3.2 Limitations of Latent Diffusion Models

The computational savings are not cost-free. The higher FID means images from LDMs may exhibit slightly reduced realism when compared to pixel-space DMs, particularly in high-frequency details. However, as Tremblay *et al.* [4] demonstrated, realism alone does not guarantee better transferability to downstream tasks. Instead, diversity and intra-domain variability were found to play a more significant role in the downstream model's ability to generalise to real-world test data. Another limitation is that image quality in LDMs remains tightly coupled to the performance of the pre-trained VAE. Any reconstruction bias or compression artefacts introduced during encoding propagate through the diffusion and decoding stages, which will subtly degrade sample fidelity.

2.3.3 Mitigating Compression Losses through Large-Scale Training Data

To minimise compression losses, Rombach *et al.* [13] trained their VAE on the LAION-400M dataset. This dataset, introduced by Schuhmann *et al.* [14], contains approximately 400 million image–text pairs collected from publicly available web sources. It was intentionally designed to replicate the scale and structure of the proprietary dataset used to train OpenAI's powerful CLIP model (discussed in Sec. 3.4), providing an open, large-scale alternative for vision–language research.

2.3.4 A Promising Framework for Text-Guided Diffusion

Although LDMs exhibit slightly higher FID scores and depend on a pretrained VAE, their drastic reductions in memory and compute costs make them highly practical for scalable and diverse data generation. In practice, the reliance on the VAE is not a major limitation, as

[3] FID measures visual similarity between generated and real samples; lower is better.

large-scale datasets such as LAION-400M and LAION-5B provide enough diversity to train high-quality latent encoders that preserve most semantic detail. By operating in a compressed latent space, LDMs strike an good balance between efficiency and fidelity. This enables high-resolution image synthesis and controllable generation at a fraction of the cost of pixel-space diffusion. This makes LDMs one of the most promising frameworks for text-guided diffusion and for mitigating the data bottleneck in downstream machine learning tasks.

3 Guidance Mechanisms in Diffusion

The iterative nature of the reverse diffusion process enables guidance of the generated outputs which allows the generated outputs to be tailored to specific downstream objectives. This guidance is applied as a *nudge* at each step of the de-noising process. Guidance can come about in the form of class labels and textual prompts but also multi-modal embeddings—any signal that conveys additional semantic information about the desired output. We aim to use this guidance mechanism to generate high-fidelity and diverse synthetic data that improves learning performance in classification tasks.

3.1 Classifier Guidance (CG)

A major step in formalising this idea of semantic guidance as a means of steering the diffusion trajectory was introduced as *classifier guidance* (CG) by Dhariwal and Nichol [15]. They used a pretrained image classifier that takes the noisy image at time t, denoted x_t, and outputs a probability distribution $p_\phi(y|x_t)$ over possible classes. Here, y represents the desired class label, such as "cat." Though x_t is corrupted by noise, the classifier can still detect faint visual cues, such as shapes, colours, or textures, that hint at the latent class. The gradient of the classifier's log-probability, $\nabla_{x_t} \log p_\phi(y|x_t)$, instructs the DM on how to adjust the current image to make the classifier more confident that it belongs to the target class y. Hence, the modified diffusion score function $\tilde{s}_\theta(x_t)$ becomes:

$$\tilde{s}_\theta(x_t) = s_\theta(x_t) + w\, \nabla_{x_t} \log p_\phi(y|x_t), \tag{1}$$

where w controls the strength of the guidance. The original diffusion score points the model toward a cleaner image, while the guidance gradient indicates how to move toward an image that is semantically consistent with the desired output (e.g., "cat"). Along with this "semantic steering", Dhariwal and Nichol [15] used a U-Net architecture with attention layers at multiple resolutions to achieve state-of-the-art performance, reporting an FID of 2.55 on CIFAR-10 and 3.85 on ImageNet 128×128. The CG model also produced sharper and more diverse samples with greater training stability. Their work marked the end of GAN dominance in image synthesis, demonstrating models that generated outputs with greater diversity and higher fidelity.

There were still problems. The reliance on an external classifier to handle noisy images made training more complex and less efficient, since the classifier itself had to learn to recognise heavily corrupted inputs. This setup also introduced the risk of the classifier biasing the generation process toward easily recognisable features rather than overall image quality. The conditioning is also restricted to only the class labels of the pre-trained classifier, limiting the model's ability

to interpret full-sentence descriptions that could yield more nuanced and compositional outputs. As a result, classifier-guided DMs [15] are suboptimal for mitigating the data bottleneck in many downstream ML tasks that require large, semantically rich synthetic datasets.

3.2 Classifier-Free Guidance (CFG)

To address the issues of classifier-guided models, Ho and Salimans [16] proposed *classifier-free guidance* (CFG), which achieved the same semantic control without using a separate classifier. In this method, the diffusion model learns to generate both *conditioned* and *unconditioned* images, where a conditioned image is generated using a given label or prompt (e.g., "cat"), and an unconditioned image is generated without any label. During training, the model occasionally receives a guidance prompt and occasionally operates without one. This forces the model to learn both conditional and unconditional image generation.

In the generation phase, the model predicts the noise present in the image twice: once using the condition ($\hat{\epsilon}_{\text{cond}}$) and once without it ($\hat{\epsilon}_{\text{uncond}}$). These two predictions are then combined using the simple linear formula:

$$\hat{\epsilon}_{\text{guided}} = (1 + s)\,\hat{\epsilon}_{\text{cond}} - s\,\hat{\epsilon}_{\text{uncond}}, \tag{2}$$

where s is a control knob that tunes the strength of adherence to the condition. A smaller s gives more diversity, while a larger s steers the generation towards outputs that better match the target concept at the cost of diversity. We see a trade-off between sample variety and semantic accuracy. This simple modification eliminated the need for an external classifier and made training more efficient. Moreover, by treating the conditioning input as a generic embedding, CFG can incorporate any vectorised semantic guide, whereas classifier-guided diffusion remains limited to the discrete label space of the pretrained classifier. For these reasons, CFG became the standard guidance method in diffusion systems such as GLIDE [17], DALL·E 2, and Stable Diffusion. Ho and Salimans [16] were able to resolve images of similar fidelity and diversity to the classifier-guided models, but with a simpler pipeline which was less resource intensive.

3.3 Limitations of Classifier and Classifier-Free Guidance

While CFG eliminates the need for an external classifier and broadens the flexibility of guidance, its steering capacity still depends on the representation power of the conditioning embedding. If the conditioning embedding itself does not encode sufficient semantic structure, the model cannot reliably interpret complex or compositional text-guides. This limitation becomes especially critical in domains such as medicine, where data generation tasks often involve highly specific, context-dependent descriptions or niche scenarios. For example, generating synthetic MRI scans conditioned on textual prompts describing rare diseases or anatomical abnormalities requires a model capable of understanding complex, domain-specific semantics. Without the ability to interpret and respond to such conditioning, the architecture cannot effectively mitigate the data bottleneck that constrains ML applications in these fields.

3.4 Contrastive Language–Image Pre-training (CLIP)

3.4.1 Combined Reasoning Over Images and Language

A potential solution to this comes about with the work of Radford *et al.* [18] with their introduction of the *Contrastive Language–Image Pre-training* (CLIP) framework. CLIP consists of two encoders: a Transformer-based text encoder and a vision encoder for images (implemented as either a ResNet or a Vision Transformer). Through this contrastive pre-training process, CLIP learns to associate natural-language descriptions with their corresponding visual concepts. The crucial benefit CLIP offers is a shared embedding space over which it can directly reason about images and natural language. In this space, related concepts appear close together, regardless of whether they come from visual or language input. For example, the text prompt "Close-up image of a cat sitting face-on to the camera" and the actual image of that scene (such as the cat in Fig. 1) would have embedding vectors that lie near each other, since they describe the same concept. This shared embedding space vastly expands expressivity of the guidance signal.

3.4.2 Measuring Similarity Between Images and Language

In CLIP's shared embedding space, both images and text prompts are represented as high-dimensional vectors. To measure how closely related they are, we use *cosine similarity*. This metric compares the angle between two vectors rather than their length. If two vectors point in a similar direction, their cosine similarity approaches 1, meaning the model sees them as describing the same concept. For unrelated image–text pairs, the vectors point in different directions, giving a similarity close to 0. If the vectors point in opposite directions, the similarity approaches -1, which can be interpreted as representing opposing or contradictory concepts—similar to antonyms in language. This simple geometric idea allows CLIP to reason about how well a caption matches an image, forming the basis for more complex text-guided image generation.

3.4.3 The Role of CLIP in Building Vision–Language Datasets

CLIP provides the rich semantic embeddings that CFG needs, creating an effective framework for text-guided image generation. The strength of the framework lies in its training: CLIP was developed by OpenAI on a privately assembled dataset of roughly 400 million image–text pairs collected from publicly available web pages. Though only the CLIP model was released and not the dataset, to enable reproducibility, Schuhmann *et al.* [14, 19] introduced the LAION-400M and LAION-5B datasets, which closely replicate the data-collection methodology used to train CLIP. They scoured open web data and filtered by CLIP cosine similarity scores, where both images and their candidate captions were embedded using the CLIP model itself. Only pairs whose cosine similarity exceeded a chosen threshold were retained, which ensured that the image and text were semantically aligned. This automated filtering process enabled this huge scale data collection, without the need for manual annotation, while also maintaining the multimodal consistency and accuracy needed for training diffusion and vision–language models. These datasets now serve as large-scale benchmarks for training and evaluating vision–language models. Radford *et al.* [18] were able to produce a model to have semantically rich embeddings

which can then serve as sentence-level conditioning signals for DMs. This breakthrough is essential to creating high-fidelity image data for downstream use. Below are some examples from the LAION-5B dataset from Schuhmann *et al.* [19].

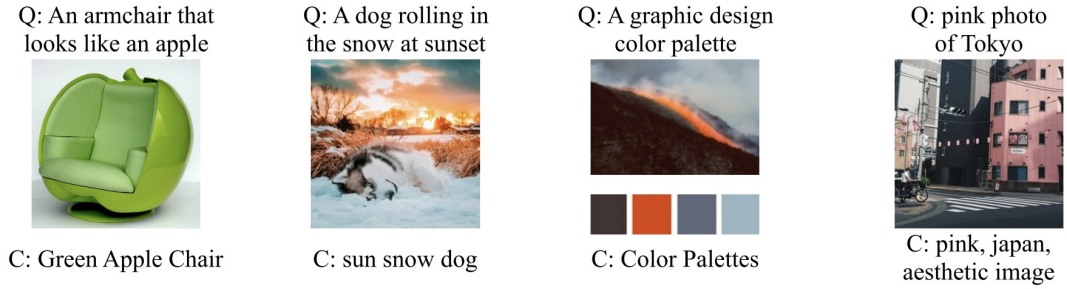

Figure 4: Example image–text pairs from the LAION-5B dataset [19]. Each example shows the top result retrieved from a CLIP-based nearest-neighbour search, where the text query (Q) is matched to an image and its corresponding caption (C). These examples illustrate the diversity and semantic alignment of image-caption pairs in this dataset.

3.5 Contrastive Language–Audio Pretraining (CLAP)

Extending the language–vision alignment of CLIP [18] to the audio domain, Elizalde *et al.* [20] introduced the *Contrastive Language–Audio Pretraining* (CLAP) framework. CLAP uses two encoders—one for audio and one for text—that learn to map both inputs into a shared embedding space. The pretraining dataset that was used was the LAION-Audio-630K corpus developed by LAION-AI, consisting of roughly 633k audio–text pairs totalling over 4,000 hours of audio. Later releases of CLAP incorporated additional datasets including AudioCaps [4] to further enhance diversity and domain coverage. The audio signals were converted into log-Mel spectrograms[5], while the text was processed using a BERT-based language encoder. The model is trained so that matching audio–text pairs achieve high cosine similarity in the embedding space, just as matching image–text pairs achieve a high cosine similarity in CLIP.

For the purposes of text-guided audio generation, CLAP's embeddings offer a viable but imperfect conditioning signal: they encode semantic structure in the audio domain, allowing diffusion models to take text prompts and generate corresponding sound content. However, its scale ($\tilde{6}30$ k pairs) is modest compared to the training corpus for CLIP. As a result, expressivity of the conditioning signal remains limited. As a result, CLAP remains under-explored for generating domain-specific synthetic audio, such as in medical or industrial applications. Beyond expressivity, Elizalde *et al.* [20] opened the path for natural language conditioned audio generation beyond images by establishing semantically aligned audio embeddings that can support diffusion-based audio data augmentation.

[4] AudioCaps [21] contains over 46,000 audio clips from AudioSet paired with human-written captions describing sound events

[5] A log-Mel spectrogram is a time–frequency representation of audio where frequencies are mapped onto the Mel scale (approximating human pitch perception) and amplitudes are expressed on a logarithmic scale.

3.6 Guidance in LDMs

Rombach et al. [13] introduced a new way to guide diffusion models by separating the conditioning mechanism from the DM. In earlier approaches, such as CG and CFG, the conditioning is applied directly within the de-noising process as shown in Equations (1) and (2) [15, 16]. In contrast, the LDM uses a separate encoder to process the conditioning signal, which is then injected into the U-Net through cross-attention layers. A schematic of the architecture is displayed in Fig. 5 The de-noiser becomes a function of both the noisy latent and the conditioning signal, $\epsilon_\theta(z_t, c)$, where z_t is the noisy latent and c is the conditioning vector.

This separation makes the model more flexible and efficient. The same diffusion model can be reused with different types of conditioning without retraining. The cross-attention layers act as the guidance path, which link the semantic conditioning vector in c to the visual features in the latent. This turns guidance into a learnable process rather than one controlled by external gradients. This trades the interpretability of the external gradient However, because this conditioning is implicit, it offers less direct control over guidance strength, and image quality remains dependent on the pretrained VAE and conditioning encoder. These are design trade-offs rather than fundamental limitations, which come with the modular nature of the LDM architecture.

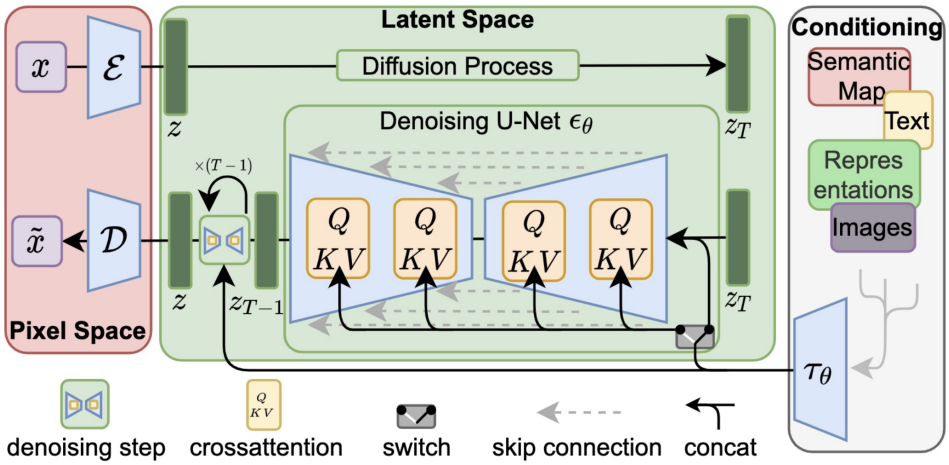

Figure 5: Schematic of the Latent Diffusion Model (LDM) architecture, adapted from Rombach *et al.* [13]. The input image x (top-left) is first encoded into a latent representation z by the VAE. Diffusion and de-noising are performed in this latent space using a U-Net with cross-attention layers that integrate a conditioning signal. The decoder reconstructs the final image $\tilde{x}$ from the de-noised latent z.

4 Current Landscape of Text-Guided Diffusion for High-Fidelity Data Generation

4.1 Text-Guided Diffusion with GLIDE

With the foundations of diffusion and guidance established, we now review the key text-guided diffusion models that inform and motivate the research questions explored in this work. A major

practical implementation of CLIP- and text-conditioned diffusion was introduced by Nichol *et al.* [17] in *GLIDE* (Guided Language-to-Image Diffusion for Generation and Editing). GLIDE demonstrated that diffusion models can generate and edit photorealistic images directly from natural language.

In its early formulation, GLIDE used the CLIP model to guide the de-noising process. However, this setup was found to be computationally expensive and sometimes unstable, since CLIP was never designed to provide gradient feedback during generation. The limitation was not with CLIP itself but with how it was used. In fact, GLIDE helped prove that CLIP-style embeddings hold strong semantic meaning. This paved the way for later models, such as the LDM introduced by Rombach *et al.* [13], to use CLIP-style embeddings as fixed conditioning vectors injected into the diffusion model through cross-attention layers, rather than as live gradient signals during sampling.

4.2 Diffusion-Based Data Augmentation for Vision and Text

Following GLIDE, researchers began exploring how text-guided diffusion could improve data availability and diversity in downstream learning tasks. Trabucco *et al.* [22] propose *DA-Fusion*, which is a simple recipe that uses a pretrained text-to-image diffusion model (Stable Diffusion) to make semantically new training images. The method works by editing real images instead of generating from pure noise. A real image is inserted into the reverse diffusion process at a selected timestep t_0, following the SDEdit approach. Smaller t_0 values result in lighter edits, while larger ones produce stronger, more varied changes. During classifier training, real and synthetic samples are mixed in each batch, with the ratio controlled by α. M synthetic variants are created for every real image. Randomising t_0 during generation increases diversity, making the augmented dataset richer and more semantically varied. This approach allows diffusion models to create realistic, label-consistent samples that enhance generalisation in few-shot and imbalanced learning settings. They showed that DA-Fusion improves accuracy by roughly 5–15 percentage points over strong baselines like RandAugment [1] across several benchmark datasets, including COCO [6].

Despite its strong performance, DA-Fusion has several limitations. It has heavy compute requirements since generating and fine-tuning synthetic images with Stable Diffusion requires repeated forward and reverse passes. The method also provides limited spatial control over how an image is edited, and the quality of results depends heavily on the quality of the conditioning signal. Moreover, DMs trained on large internet datasets risk reproducing copyrighted or biased content. As a result, such models cannot be reliably deployed in sensitive domains like medicine or in fields where intellectual property and data privacy are critical. Consequently, the data bottleneck remains a major challenge in these fields.

4.3 Text-to-Audio Generation with Latent Diffusion

A powerful implementation of CLAP embeddings for audio generation was introduced by Liu *et al.* [23] with their model, *AudioLDM*. This LDM is similar to image-based LDMs in that it operates on compressed audio representations instead of raw waveforms. Audio signals are first encoded into a low-dimensional latent space by an audio autoencoder, and diffusion is then

performed within this space. During sampling, CLAP text embeddings guide the de-noising process to generate a semantically matching compressed audio, which the decoder processes to produce the final audio sample. AudioLDM achieved state-of-the-art results on benchmarks such as AudioCaps and ESC-50[6] and significantly outperformed previous models in both Fréchet Audio Distance (FAD) [7] and human preference studies.

The compared sound samples and text prompts were very coarse and simplified. For example, embedded prompts such as "dog barking" were used instead of more descriptive ones like "dog panting for 3 seconds, then barking for 5 seconds." AudioLDM struggled with complex or fine-grained text prompts and remains limited by the size and generality of CLAP's pre-training data. For example the model confused the sound of "drums" with "clapping". This *semantic drift* limits its usability in mission critical audio recognition tasks. AudioLDM also had no control over when sounds occur in time. Everything was mixed together in one clip in the final sound sample. Despite these challenges, AudioLDM proved that CLAP embeddings can serve as a strong conditioning signal for high-quality, text-guided audio diffusion.

To address some of the limitations of AudioLDM, Jiang *et al.* [25] introduced *ControlAudio*, which adds explicit timing and event control to text-to-audio generation. While AudioLDM relied on coarse descriptions like "dog barking," ControlAudio allows users to specify multiple sound events with precise time intervals using a structured prompt format. For example:

```
@{dog panting & <0.0, 3.0>} @{dog barking & <3.0, 8.0>}
```

This syntax defines that the "dog panting" sound should occur between 0 and 3 seconds, followed by "dog barking" from 3 to 8 seconds. ControlAudio achieved an FAD of 1.46 on the AudioCaps dataset, whereas AudioLDM achieved an FAD of 2.46, demonstrating a notable improvement.

However, the biggest limitation that ControlAudio still faces is the same one this work aims to address—the data bottleneck. Model performance is constrained by the limited scale and diversity of CLAP's training data. Because CLAP embeddings were trained on a relatively small dataset, their lack of expressivity restricts how well the DM can learn or generalise across nuanced sound concepts such as tonality and emotion. Thus, the data bottleneck remains a fundamental challenge for advancing text-to-audio DMs.

5 Open Challenges and Closing Remarks

Across the literature, it is clear that the performance of diffusion models for data generation depends heavily on the quality and expressivity of the text-conditioning embeddings that guide the generation process. The conditioning embedding not only determines how semantically aligned the generated samples are, but also sets an upper bound on their usefulness for downstream machine learning classification tasks.

This raises an important question: can models such as CLIP or CLAP be leveraged not merely as descriptive encoders, but as reliable generative guides for constructing useful and balanced datasets? Achieving this requires finding a careful balance between raw fidelity and

[6] ESC-50 [24] includes 2,000 labelled environmental audio clips across 50 everyday sound classes such as animals, human activity, and natural or mechanical noises.

[7] FAD is the analogous metric to FID in the audio domain; a lower FAD means more realistic audio samples.

domain-specific variation. High-fidelity samples alone risk over-fitting to narrow data distributions, while excessive randomisation can produce unrealistic or semantically inconsistent examples. Ultimately, while diffusion models have demonstrated remarkable potential for data synthesis, their usefulness in specialised domains will depend on how well they can bridge this gap—generating data that is both semantically accurate and sufficiently diverse to alleviate the data bottleneck that continues to constrain progress.

References

[1] E. D. Cubuk, B. Zoph, J. Shlens, and Q. Le, "Randaugment: Practical automated data augmentation with a reduced search space," in *Advances in Neural Information Processing Systems*, H. Larochelle, M. Ranzato, R. Hadsell, M. Balcan, and H. Lin, Eds., vol. 33, Curran Associates, Inc., 2020, pp. 18 613–18 624. [Online]. Available: https://proceedings.neurips.cc/paper_files/paper/2020/file/d85b63ef0ccb114d0a3bb7b7d808028f-Paper.pdf.

[2] N. V. Chawla, K. W. Bowyer, L. O. Hall, and W. P. Kegelmeyer, "Smote: Synthetic minority over-sampling technique," *Journal of Artificial Intelligence Research*, vol. 16, pp. 321–357, 2002.

[3] A. Shrivastava, T. Pfister, O. Tuzel, J. Susskind, W. Wang, and R. Webb, "Learning from simulated and unsupervised images through adversarial training," in *Proceedings of the IEEE Conference on Computer Vision and Pattern Recognition (CVPR)*, IEEE, 2017, pp. 2107–2116.

[4] J. Tremblay *et al.*, "Training deep networks with synthetic data: Bridging the reality gap by domain randomization," in *Proceedings of the IEEE/CVF Conference on Computer Vision and Pattern Recognition Workshops (CVPRW)*, 2018, pp. 969–977.

[5] Y. Liao, J. Xie, and A. Geiger, *Kitti-360: A novel dataset and benchmarks for urban scene understanding in 2d and 3d*, 2022. arXiv: 2109.13410 [cs.CV]. [Online]. Available: https://arxiv.org/abs/2109.13410.

[6] T.-Y. Lin *et al.*, *Microsoft coco: Common objects in context*, 2015. arXiv: 1405.0312 [cs.CV]. [Online]. Available: https://arxiv.org/abs/1405.0312.

[7] J. Sohl-Dickstein, E. Weiss, N. Maheswaranathan, and S. Ganguli, "Deep unsupervised learning using nonequilibrium thermodynamics," in *Proceedings of the 32nd International Conference on Machine Learning*, F. Bach and D. Blei, Eds., ser. Proceedings of Machine Learning Research, vol. 37, Lille, France: PMLR, Jul. 2015, pp. 2256–2265. [Online]. Available: https://proceedings.mlr.press/v37/sohl-dickstein15.html.

[8] J. Ho, A. Jain, and P. Abbeel, "Denoising diffusion probabilistic models," in *Advances in Neural Information Processing Systems*, H. Larochelle, M. Ranzato, R. Hadsell, M. Balcan, and H. Lin, Eds., vol. 33, Curran Associates, Inc., 2020, pp. 6840–6851. [Online]. Available: https://proceedings.neurips.cc/paper_files/paper/2020/file/4c5bcfec8584af0d967f1ab10179ca4b-Paper.pdf.

[9] B. Ghojogh and A. Ghodsi, *Diffusion models: Tutorial and survey*, https://doi.org/10.31219/osf.io/w7jcm, Preprint, OSF (Open Science Framework), Jul. 2024. DOI: 10.31219/osf.io/w7jcm.

[10] A. Q. Nichol and P. Dhariwal, "Improved denoising diffusion probabilistic models," in *Proceedings of the 38th International Conference on Machine Learning*, M. Meila and T. Zhang, Eds., ser. Proceedings of Machine Learning Research, vol. 139, PMLR, 18–24 Jul 2021, pp. 8162–8171. [Online]. Available: https://proceedings.mlr.press/v139/nichol21a.html.

[11] K. Erdem, "Step by step visual introduction to diffusion models.," *https://erdem.pl*, Nov. 2023. [Online]. Available: https://erdem.pl/2023/11/step-by-step-visual-introduction-to-diffusion-models.

[12] J. Song, C. Meng, and S. Ermon, "Denoising diffusion implicit models," in *International Conference on Learning Representations*, 2021. [Online]. Available: https://openreview.net/forum?id=St1giarCHLP.

[13] R. Rombach, A. Blattmann, D. Lorenz, P. Esser, and B. Ommer, " High-Resolution Image Synthesis with Latent Diffusion Models," in *2022 IEEE/CVF Conference on Computer Vision and Pattern Recognition (CVPR)*, Los Alamitos, CA, USA: IEEE Computer Society, Jun. 2022, pp. 10 674–10 685. DOI: 10.1109/CVPR52688.2022.01042. [Online]. Available: https://doi.ieeecomputersociety.org/10.1109/CVPR52688.2022.01042.

[14] C. Schuhmann *et al.*, "Laion-400m: Open dataset of clip-filtered 400 million image-text pairs," in *Proceedings of NeurIPS Data-Centric AI Workshop*, 2021. [Online]. Available: https://arxiv.org/abs/2111.02114.

[15] P. Dhariwal and A. Q. Nichol, "Diffusion models beat GANs on image synthesis," in *Advances in Neural Information Processing Systems*, A. Beygelzimer, Y. Dauphin, P. Liang, and J. W. Vaughan, Eds., 2021. [Online]. Available: https://openreview.net/forum?id=AAWuCvzaVt.

[16] J. Ho and T. Salimans, *Classifier-free diffusion guidance*, 2022. arXiv: 2207.12598 [cs.LG]. [Online]. Available: https://arxiv.org/abs/2207.12598.

[17] A. Nichol *et al.*, "Glide: Towards photorealistic image generation and editing with text-guided diffusion models," in *Proceedings of the 39th International Conference on Machine Learning*, ser. Proceedings of Machine Learning Research, vol. 162, PMLR, 2022, pp. 16 784–16 804. [Online]. Available: https://proceedings.mlr.press/v162/nichol22a.html.

[18] A. Radford *et al.*, "Learning transferable visual models from natural language supervision," in *Proceedings of the 38th International Conference on Machine Learning*, M. Meila and T. Zhang, Eds., ser. Proceedings of Machine Learning Research, vol. 139, PMLR, 18–24 Jul 2021, pp. 8748–8763. [Online]. Available: https://proceedings.mlr.press/v139/radford21a.html.

[19] C. Schuhmann *et al.*, "Laion-5b: An open large-scale dataset for training next generation image-text models," in *Advances in Neural Information Processing Systems*, S. Koyejo, S. Mohamed, A. Agarwal, D. Belgrave, K. Cho, and A. Oh, Eds., vol. 35, Curran Associates, Inc., 2022, pp. 25 278–25 294. [Online]. Available: https://proceedings.neurips.cc/paper_files/paper/2022/file/a1859debfb3b59d094f3504d5ebb6c25-Paper-Datasets_and_Benchmarks.pdf.

[20] B. Elizalde, S. Deshmukh, M. Al Ismail, and H. Wang, "Clap learning audio concepts from natural language supervision," in *ICASSP 2023-2023 IEEE International Conference on Acoustics, Speech and Signal Processing (ICASSP)*, IEEE, 2023, pp. 1–5.

[21] K. Kim, S. Kim, H. Lee, and J. Nam, "Audiocaps: Generating captions for audios in the wild," in *Proceedings of the North American Chapter of the Association for Computational Linguistics (NAACL-HLT)*, 2019, pp. 119–132. DOI: 10.18653/v1/N19-1011. [Online]. Available: https://aclanthology.org/N19-1011.

[22] B. Trabucco, K. Doherty, M. A. Gurinas, and R. Salakhutdinov, "Effective data augmentation with diffusion models," in *The Twelfth International Conference on Learning Representations*, 2024. [Online]. Available: https://openreview.net/forum?id=ZWzUA9zeAg.

[23] H. Liu *et al.*, "AudioLDM: Text-to-audio generation with latent diffusion models," in *Proceedings of the 40th International Conference on Machine Learning*, A. Krause, E. Brunskill, K. Cho, B. Engelhardt, S. Sabato, and J. Scarlett, Eds., ser. Proceedings of Machine Learning Research, vol. 202, PMLR, 23–29 Jul 2023, pp. 21 450–21 474. [Online]. Available: https://proceedings.mlr.press/v202/liu23f.html.

[24] K. J. Piczak, "ESC: Dataset for environmental sound classification," in *Proceedings of the 23rd ACM International Conference on Multimedia (ACM MM)*, 2015, pp. 1015–1018. DOI: 10.1145/2733373.2806390. [Online]. Available: https://dl.acm.org/doi/10.1145/2733373.2806390.

[25] Y. Jiang, Z. Chen, Z. Ju, Y. Dai, W. Dou, and J. Zhu, *Controlaudio: Tackling text-guided, timing-indicated and intelligible audio generation via progressive diffusion modeling*, 2025. arXiv: 2510.08878 [cs.SD]. [Online]. Available: https://arxiv.org/abs/2510.08878.