INVESTOR DECK

APRIL 2018

16MW Wind Power Project (Operational)
and 8MW Shovel Ready Project

Table of Contents

1. Executive Summary 1
2. Cost Parameters 2
3. Returns and Valuations 3
4. Proposal 4
5. Abbreviations 5

1. EXECUTIVE SUMMARY

Our 16 MW capacity Wind Power Project at Talaricheruvu in Anantapur district of Andhra Pradesh has commenced commercial operations on the 27th of August 2016. The total Project cost is INR 120.65 Crores. The site has a mean wind speed of 6.24 m/s at 90 m hub height with an air density of 1.115 kg/m3. This project has 8 machines of 2 MW capacity which are of Inox DF93 model i.e. (2 MW of rated capacity and Wind Turbine Generator (WTG) rotor diameter of 93 m at a hub height of 80 meters with a tubular tower).

The wind resource assessment was carried out by Inox with mast data (at 80 m hub height) at the site location.

All necessary clearances are in place.

Operational Parameters

Particulars	Unit	Details
Capacity	MW	16.00
PLF	%	27.0%
Construction start date		31-DEC-15
Construction Period	Months	8
COD		27-AUG-16
Net Tariff	Rs/Unit	4.84

At 27% PLF, the farm can generate 37.8 Million Units per year and the entire units are available for sale to the DISCOM.
The power generated is being evacuated at 33 KV level to the Ankireddipally APTRANSCO 132/33 KV Ankireddypalle substation. The required approval for connection at 33 KV level at the substation has already been obtained from APTRANSCO and the Project has been successfully connected to the Grid via this Substation. The Power Purchase Agreement (PPA) has also been signed on 27th April 2016 which guarantees that the government of Andhra Pradesh will purchase all the power produced for a period of 25 years.

The Wind Power Project has been built on 35 acres of Government land which has been handed over to us on a lease of 33 years.

2. COST PARAMETERS

A) Project Cost (Approved by Lender's Independent Engineer)

Project Cost	Amount INR (Crs)
Total Project Cost	120.65
Cost per MW	7.54

B) Operating Cost Parameters

O&M Cost	Amount INR (Crs)
Base Year O&M Cost per MW	0.09
Base Year O&M Cost	1.47
Annual Escalation %	5.00%

Base year is 2019 as the first 3 years of O&M is free

Financial Assumptions

Particulars	Unit	Original	Post COD & Refinancing*
Debt	%	68.79%	68.79%
Equity	%	31.21%	31.21%
Interest on RTL	%	12.75%	10.60%
Moratorium Period (From COD)	Years	1	1
Repayment Period	Years	13.5	15
Required DSCR		1.1	1.1
Minimum DSCR		1.30	1.45
Average DSCR		1.48	1.66
Working Capital Margin	%	25	25
Interest on Working Capital @	%	13.45%	13.45%
Tariff	Rs per unit	4.84	4.84
NPV	Rs. Lakhs	1333	2174

*The interest rate on the Rupee Term Loan (RTL) is considered as 12.75% post COD up to 31st March 2018, after which the loan has been refinanced to a rate of 10.60% from 31st March 2018 onwards.

GBI Assumptions

Particulars	Unit	Details
GBI Rate	Rs/Unit	0.50
Maximum Incentive	Rs Crs/MW	1.00
Min. Incentive Period	Years	4
Max. incentive per year	Rs Crs/MW	0.25
Max. Incentive Period	Years	10

3. RETURNS & VALUATION

Particulars	Original (RTL – 12.75%)	Post COD (RTL- 10.60%)
Equity IRR	16.49%	18.60%
Project IRR	14.45%	14.62%

The loan has now been taken over by Indian Renewable Energy Development Agency Ltd (IREDA)as on the 31st of March 2018 and as of 1st April 2018 the effective interest rate is 10.60% and the Equity IRR is 18.60%.

VALUATION

While calculating EBIDTA, no escalation in Tariff has been considered over the operating period, but operating expenses have been escalated at 5% on YOY basis from the 3rd year of operations.

Free Cash flows available for the equity shareholders over the entire duration of 25 years which has been considered for valuation.

Free cash flow available for Equity is calculated by reducing the following from EBIDTA

- Interest (Term Loan & working capital)
- Applicable Taxes
- Term Loan repayment (starts in Year 2 of operations and is repaid within 15 years) -
Margin required for working Capital over the operations period
- Salvage Value has been considered in year 2043.
- Loan repayment is Structured as specified by the lender

4. PROPOSAL

Particulars	%	Rs. Lakhs
Total Equity		3,765
Proposed Divestment	100%	3,765
Add Premium	10%	376.50
Total		4,141.50

We have successfully commissioned this project 20 months ago and it is now an income generating asset which will give its investors a sure return as it is backed by a Government Power Purchase Agreement and the project will enjoy steady cash flows for 25 years. Since the project is up and running and the construction risk is zero, we demand a premium of 10% on book value even after which the investor will enjoy double digit IRRs.

Hence we would like to propose a buyout of this commissioned existing 16MW Project for a consideration of INR 41.41cr. We have factored in a premium of 10% or INR 3.76cr for all the hard work put in by us.

5. ABBREVIATIONS

1. IREDA Ltd: Indian Renewable Energy Development Agency Ltd
2. IPP: Independent Power Producer
3. MW: Mega Watt
4. PLF: Plant Load Factor
5. APTRANSCO: Transmission Corporation of Andhra Pradesh Ltd
6. PPA: Power Purchase Agreement
7. O&M: Operation and Maintenance
8. WTG: Wind Turbine Generator
9. COD: Commercial Operation Date
10. RTL: Rupee Term Loan
11. GBI: Generation Based Incentive
12. IRR: Internal Rate of Return
13. EBITDA: Earnings Before Interest, Tax, Depreciation and Amortization
14. NPV: Net Present Value
15. DSCR: Debt Service Coverage Ratio
16. FCFE: Free Cash Flow to Equity

16MW Wind Power Project (Operational) Permissions

ఆంధ్రప్రదేశ్ సంప్రదాయేతర ఇంధన వనరుల అభివృద్ధి సంస్థ లి.,
Non-Conventional Energy Development Corporation of Andhra Pradesh Ltd.,
(A State Government Company)
Regd.Office: 5-8-207/2, Pisgah Complex, Nampally, Hyderabad - 500 001. India.
Tele: Off: 040-23202391 / 23203638 / 23203376 / 23202262, Fax: 040-23201666
E-mail: info@nedcap.gov.in, Website: www.nedcap.gov.in

Ref: NREDCAP/WE/10654/ / Dt.25.08.2011

PROCEEDINGS

Sub: Wind power Project in private sector - Communication of sanction for 16.00 MW capacity wind farm project at Talaricheruvu, Anantapur district - Reg.

Ref: 1. Application for allotment of wind farm dt.04.03.2011 of M/s.

2. G.O.Ms.No.48 dt.11-04-2008 of Energy Dept. Govt. of A.P.
3. G.O.Ms.No.99 dated 09.09.2008 of Energy (RES) Dept., Govt. of A.P.
4. Approval of the Board of NREDCAP during the meeting held on 25.4.2011
5. Acceptance given by the developer during the meeting held on 7.7.2011

* * *

In the reference 1st cited, M/s. have applied to NREDCAP for allotment of 20.00 MW capacity wind power project at Talaricheruvu, Anantapur District, for generation of electric power on commercial basis.

As per the orders issued by the State Govt. in the reference 2nd cited, wherein NREDCAP is permitted to sanction wind power projects of capacity upto 20 MW.The Board of NREDCAP during its meeting held on 25.04.2011 has considered the application and accorded approval for sanction of wind power project

In compliance with this Board approval and acceptance given by the developer during the meeting held on 7.7.2011, 16.00 MW capacity wind power project is sanctioned to **M/s.** , to set up at **Talaricheruvu, Anantapur District** for generation of power on commercial basis.

The allotment is accorded subjected to the following conditions.

1. The allotment of the land and alienation of the land shall be subject to Govt. orders issued in this regard.

contd..2

2. The wind power project shall be established in the specified area as decided by NREDCAP.
3. The wind power project allotted now is as per the Wind power policy announced by the Govt. of A.P. vide G.O.Ms.No.48 dated 11.04.2008 and G.O.Ms.No.99 dated 09.09.2008 of Energy (RES) department.
4. In case of private lands, the company shall make its own arrangements for procurement of land, subject to approval of the area of operation by NREDCAP
5. The Company shall install wind turbines, so as not to affect the performance of the other wind turbines and maintain safety standards in consultation with NREDCAP.
6. The company may explore the possibility of installing higher capacity Wind Electric Generators to achieve higher plant load factor.
7. The company shall install the Wind Electric Generators under the project, which are having the approval of Centre for Wind Energy Technology (C-WET)
8. No second hand or used wind turbines, imported from abroad or procured locally shall be installed.
9. If there is any change in the proposal submitted along-with the application, the same shall be brought to the notice of NREDCAP and approval shall be obtained for such changes.
10. The wind farm developer should ensure that the wind mill generate grid quality power with power factor not less than 0.85 and should draw minimum reactive power
11. The Company shall abide by the regulations of the Andhra Pradesh Electricity Regulatory Commission (APERC). The proceedings issued by APERC from time to time shall be followed.
12. The company shall enter into Power Purchase Agreement or Open access agreement or Wheeling agreement with DISCOMs as per the policy of the Govt. in this regard from time to time.

contd..3

13. The company shall pay Rs.1.50 Lakhs per Megawatt as sanction fee to NREDCAP at the time of entering into agreement.

14. The company shall obtain all clearances necessary for installation of wind electric Generators in accordance with statutory provisions, guidelines issued by the Government of India and the Government of Andhra Pradesh from time to time.

15. The company shall complete the financial closure within a period of six months from the date of signing of the Agreement or before such extensions as may be accepted and granted by the NREDCAP on request by the company on account of delays in obtaining all necessary consents, licenses, authorizations and clearances required from the Government of Andhra Pradesh and Government of India.

16. The company shall execute the work as per terms of the allotment letter and complete within 18 months from the date of achieving the financial closer. In case, the company fails to execute the work within the stipulated time, NREDCAP will recommend to Govt. for the resumption of land and the project allotment will be cancelled.

17. At the time of land allotment, the company shall give a schedule of execution of the project. The project must be commissioned within a period of two years from the date of this agreement. The company shall provide an irrevocable bank guarantee of Rs.2,00,000/- (Rupees Two lakhs only) per megawatt in case of Govt. lands and Rs.1,00,000/- (Rupees One lakh only) per MW in case of private lands, at the time of agreement, valid for a period of two years (24 months) or a demand draft drawn in favour of NREDCAP, payable at Hyderabad for an equivalent amount in lieu of Bank guarantee, at the time of agreement. The amount will be adjusted against penalties imposed, if any, due to delay in execution of the project.

18. If the company fails to complete the project as per agreed schedule, the penalties will be imposed as per the terms of the agreement and if the project is not commissioned as per the schedule, all permissions including the allotment of land would stand automatically cancelled and the bank guarantee given by the company will be encashed.

19. The company shall permit the other wind developers to use the roads and other infrastructure facilities if any on the allotted land and also provide infrastructure and other facilities for conveyance and for transmission of power necessary in that area.

Contd..4

20. The company shall permit the officers of the Non Conventional Energy Development Corporation of A.P. Ltd / Government of Andhra Pradesh / Government of India for inspection/verification.

21. The company shall prepare an action plan in detail for completion of wind power project allotted within a target period of 2 years and communicate the action plan for each item of work within 3 months from the date of signing of agreement. The company shall submit quarterly progress reports for each quarter ending March, June, September and December. The progress will be reviewed by NREDCAP, based on quarterly report regularly. Based on progress of works against set mile stones, NREDCAP may consider for reduction of Bank guarantee and accordingly to release the proportionate bank guarantee.

The receipt of the letter may be acknowledged.

Sd/-
V.C & MANAGING DIRECTOR

To

Copy to the Prl. Secy. to Govt, Energy Dept, Govt. of A.P. Hyderabad.
Copy to Chairman and Managing Director, APCPDCL, Mint Compound, Hyderabad.
Copy to the Chief Engineer, IPC, AP Power Coordination Committee, AP TRANSCO, Hyderabad.
Copy to the District Collector, Anantapur
Copy to the Executive Engineer (RE), NREDCAP, Anantapur Dist

// Forwarded By Order//

Dy.General Manager(T)

ఆంధ్రప్రదేశ్ నూతన మరియు పునరుద్ధరణీయ ఇంధన వనరుల అభివృద్ధి సంస్థ లి.
New & Renewable Energy Development Corporation of Andhra Pradesh Ltd.
(A State Government Company)
(Formerly Non-Conventional Energy Development Corporation of Andhra Pradesh Ltd.)
Regd. Office : 5-8-207/2, Pisgah Complex, Nampally, Hyderabad - 500 001. India.
Tel : Off : 040-23202391, 23202262, 23203376 Fax : 040-23201666.
E-mail : info@nedcap.gov.in, nedcap@ap.nic.in Website : www.nedcap.gov.in

Ref: NREDCAP/WE/10654/ Dt.14.05.2015

To
M/s

Sirs,

Sub: - Execution of 16 MW Wind Farm at Talaricheruvu, Ananthapur District – Extension of time – Reg.

Ref: - Your Lr. No. Nil, Dt. 30-04-2015

&&&

With reference to the letter cited, the extension of project time is granted upto 31.08.2016 subject to submission of extended Bank Guarantee valid upto 31.08.2016 before one month of the expiry date of the existing Bank Guarantee which is valid upto 14.11.2015 otherwise, extension of time after 14.11.2015 is not valid and the Bank Guarantee will be invoked.

Thanking you,

Yours faithfully,
Sd/-
VC & MANAGING DIRECTOR

//FBO//

PROJECT DIRECTOR (WE)

GOVERNMENT OF ANDHRA PRADESH

ABSTRACT

Lands – Ananthapuramu District – Allotment of Government land total an extent of Ac. 35.00 cts. i.e., an extent of Ac.25.00 cts. in Sy.No.720, 721 etc., of Talaricheruvu Village, Ac.7.50 cts. in Sy.No.1327, 1328 etc. of Alur Village and Ac. 2.50 cts. in Sy.No.1574 of Sajjaladinne Village of Tadipatri Mandal in favour of M/s. and NREDCAP, Hyderabad jointly for a period of 33 years for establishment of 16 MW Wind Power Project on lease basis @ 10% of market value of Rs. 2.00 lakh per acre, per annum, in terms of GO.Ms.No. 571, Revenue (Assn.I) Dept., dt. 14.09.2012, subject to certain conditions – Orders – Issued.

Revenue (Assignment.V) Department

GO.Ms. No. 406

Dated : 09.12.2014
Read the following:

1. From the District Collector, Ananthapuramu Lr. Rc. No. E3/10395/2013, dt. 25.11.2013.
2. From the Spl.CS & CCLA., AP., Hyderabad Lr. No. Spl.B3/1431/2013, dt. 11.02.2014.

-:0:-

ORDER :

In the reference 1st read above, the District Collector, Ananthapuramu has reported that M/s. has requested for allotment of land in Sy.No.720, 721 etc., an extent of Ac. 25.00 cts. of Talaricheruvu Village, Sy. No. 1327,1328 etc. an extent of Ac. 7.50 cts. of Alur Village and Sy.No.1574 an extent of Ac. 2.50 cts. of Sajjaladinne Village of Tadipatri Mandal on lease basis for establishing Wind Farms. He has further reported that the VC & MD, NREDCAP, Hyderabad has sanctioned 15.50 MW capacity wind power project in favour of M/s. and requested the Collector for allotment of Government land on lease basis jointly in the name of M/s. and NREDCAP in terms of G.O.Ms.No.571 Rev (Assn.I) Dept., Dt.14.09.2012.

2. The District Collector, Ananthapuramu has also reported that the proposed lands are located on the top of the Hillocks and not fit for cultivation. The lands are free from encroachments and have no permanent structures. and the area is covered with thorny bushes and the proposed land is quite suitable for setting up of Wind Power Project. A1 Notices were published and no objections were received. The concerned Grampanchayats have also passed resolutions for allotment of lands. The joint Collector, Ananthapuramu has inspected the proposed lands and recommended for alienation.

3. The District Collector, Ananthapuramu has recommended for allotment of the land in favour of M/s and NREDCAP, Hyderabad jointly for establishment of Wind Power Project on lease basis @ Rs.2,00,000/- per acre, in terms of GO. Ms. No. 571, Rev. (Assn.V) Dept., dt. 14.09.2012.

4. In the reference 2nd read above, the Special Chief Secretary & Chief Commissioner of Land Administration, AP. Hyderabad has reported that the above proposal was placed before the A.P.L.M.A. in the meeting held on 04.02.2014, and the A.P.L.M.A. recommended for allotment of Government lands to an extent of Ac.35-00 cts. in Sy.No.720, etc., located at Talaricheruvu, Alur and Sajjaladinne Villages of Tadipatri Mandal in favour M/s. and NREDCAP, Hyderabad jointly for establishment of Wind Power Project on lease basis @ Rs.2,00,000/- per acre, subject to concurrence of the administrative department in Annexure-XI, since the same is not obtained and if the administrative department is satisfied that the land is required for this purpose at the extent as proposed is justified, then proceed further for leasing out the same as aforesaid mentioned.

5. In the circumstances reported by the Collector, Ananthapuramu and as recommended by the Special Chief Secretary & Chief Commissioner of Land Administration, AP. Hyderabad /A.P.L.M.A., the Government after careful examination of the matter, hereby order that the Government lands total an extent of Ac. 35.00 cts. i.e., an extent of Ac.25.00 cts. in Sy.No.720, 721 etc., of Talaricheruveu Village, Ac.7.50 cts. in Sy.No.1327, 1328 etc. of Alur Village and Ac. 2.50 cts. in Sy.No.1574 of Sajjaladinne Village of Tadipatri Mandal, Ananthapuramu District be allotted in favour of M/s. and NREDCAP, Hyderabad jointly for establishment of 16 MW Wind Power Project on lease basis for a period of 33 years, on payment of lease rent @ 10% of market value of Rs. 2.00 lakh per acre, per annum, and shall be enhanced in every block period of 5 years increasing up to 10% on present rent, in terms of GO. Ms. No. 571, Revenue (Assn.I) Dept., dt. 14.09.2012, subject to following conditions in addition to the conditions under BSO-24;

(i) The Energy Department should finalize terms & Conditions as deem fit and also time limit for completion of project.

(ii) The land will be resumed to Government in the event of failure to comply with terms & conditions stipulated by the Energy Department.

(iii) The NREDCAP shall assess the revenues from the project and ensure that Government get a fair share in the stream of income from the land allotted.

(iv) Lease agreement shall be executed only after financial closure and ordering of the equipment for setting up of the power project.

6. The Special Chief Secretary & Chief Commissioner of Land Administration, AP. Hyderabad and the Collector, Ananthapuramu District shall take further necessary action accordingly.

(BY ORDER AND IN THE NAME OF THE GOVERNOR OF ANDHRA PRADESH)

J.C. SHARMA
PRINCIPAL SECRETARY TO GOVERNMENT

To
The Special Chief Secretary & Chief Commissioner of
Land Administration, AP. Hyderabad.
The Collector, Ananthapuramu District.

Copy to:
The Energy (Power) Department.
The VC& MD., NREDCAP, Hyderabad.
The Finance (Exp- Rev) Department.
The GA(Cabinet) Department, W.r.to their U.O.No.94/2014, dated: 04.12.2014.
The P.S. to Prl.Secy. to CM.
The P.S.to Dy.C.M. (Revenue).
The P.S. to Prl.Secy. (Revenue).
Sf./Sc.

// FORWARDED :: BY ORDER //

SECTION OFFICER

ఆంధ్రప్రదేశ్ నూతన మరియు పునరుద్ధరణీయ ఇంధన వనరుల అభివృద్ధి సంస్థ లి.
New & Renewable Energy Development Corporation of Andhra Pradesh Ltd.
(A State Government Company)
(Formerly Non-Conventional Energy Development Corporation of Andhra Pradesh Ltd)
Regd. Office : 5-8-207/2, Pisgah Complex, Nampally, Hyderabad - 500 001. India.
Tel : Off : 040-23202391, 23202262, 23203376 Fax : 040-23201666.
E-mail : info@nedcap.gov.in, nedcap@ap.nic.in Website : www.nedcap.gov.in

Ref: NREDCAP/ATP/WD/

Date: 23.05.15

HANDING OVER OF THE LAND CERTIFICATE

As per the Vice Chairman & Managing Director, NREDCAP, Hyderabad Lr. No. NREDCAP/WE/ dated 08.05.15 M/s has remitted the market value vide challan no. 3482 dated 22.05.15 Rs.7,00,000-00.The schedule lands advance possession have been handed over on this 23rd day of May 2015 for establishment of Wind Power Project at Tadipatri Mandal in favour of M/s The terms of G.O.Ms No. 571 Rev(Assignement.1) Dept, dated 14.09.12 for establishment of 16 MW Wind Power Project on lease basis for a period of 33 years on payment of lease rent @ 10% of Rs. 2.00 lakh per acre, per annum and shall be enhanced in every block period of 5 years increasing up to 10% on present rent, in terms of G.O.Ms No. 571 Rev(Assignement.1) Dept, dated 14.09.12 subject to the following condition in addition to the condition under B.S.O. 24.

(i) The energy Department should finalize terms & conditions as deem fit and also time limit for completion of project

(ii) The land will be resumed to Government in the event of failure to comply with the terms and conditions stipulated by the Energy department.

(iii) The NREDCAP shall assess the revenue from the project and ensure that government gets a fair share in the stream of income from the land allotted.

(iv) Lease agreement shall be executed only after financial closure and ordering of the equipment for setting up of the power project.

The lands in following Sy.Nos. are free from encumbrances.

SCHEDULE

Mandal :Tadipatri

Village : Talaricheruvu

S.No.	Sy.No.	Extent
1.	720-1	2.50
2.	720-3	2.50

Cillage : Sajjaladinne

S.No.	Sy.No.	Extent
1.	1574	2.50

Village : Aluru

S.No.	Sy.No.	Extent
1.	1327	2.50
2.	1328	2.50

ఆంధ్రప్రదేశ్ నూతన మరియు పునరుద్ధరణీయ ఇంధన వనరుల అభివృద్ధి సంస్థ లి.
New & Renewable Energy Development Corporation of Andhra Pradesh Ltd.
(A State Government Company)
(Formerly Non-Conventional Energy Development Corporation of Andhra Pradesh Ltd)
Regd. Office : 5-8-207/2, Pisgah Complex, Nampally, Hyderabad - 500 001. India.
Tel : Off : 040-23202391, 23202262, 23203376 Fax : 040-23201666.
E-mail : info@nedcap.gov.in, nedcap@ap.nic.in Website : www.nedcap.gov.in

3.	721-1	2.50		3.	1329	2.50
4.	721-3	2.50				
5.	722-1	2.50				
6.	722-3	2.50				
7.	723	2.50				
8.	724-1	2.50				
9.	724-3	2.50				
10.	720-5	2.50				
Total		25.00	2.50			7.50

Grand Total : 35.00 acres

Handed over by

District Manager (RE) WD
NREDCAP:Anantapuramu

23/5/15

Taken over by

Authorised signatory

भारतीय गैर न्यायिक

एक सौ रुपये Rs. 100

रु. 100 ONE HUNDRED RUPEES

सत्यमेव जयते

भारत INDIA

INDIA NON JUDICIAL

30/11/16

తెలంగాణ तेलंगाना TELANGANA

F 966432

S. LAXMI NARAYANA
Licenced Stamp Vendor
Lic No 16-11-02/06, Reg No. 16-11-11/15
Off & Res 6-3-392, Behind Panjagutta Police Station
Punjagutta, Hyderabad(South) District.

No. 18403 Date 30/11/16 Rs. 100/-

Name:

S/D/W/o:

For Whom: N/S

Lease Deed

Between

New and Renewable Energy Development Corporation of AP Ltd., (NREDCAP)

And

This deed of lease ("Lease Deed") executed on this the 1st day of December, 2016 at Hyderabad

Between

New and Renewable Energy Development Corporation of AP Ltd., (NREDCAP) (A State Government Company) (formerly known as NEDCAP), a having its registered office at 5-8-207/2, Pisgah Complex, Nampally, Hyderabad – 500001, Andhra Pradesh, India represented by its Vice-Chairman and Managing Director, **Sri M. Kamalakar Babu,** herein after referred to as NREDCAP which expression shall unless it to be repugnant to the context or meaning thereof, includes its successors-in-office, administrators and permitted assignees , of the first part (herein after called as 'Lessor').

For New & Renewable Energy Development Corporation of Andhra Pradesh Ltd.

Vice Chairman & Managing Director

And

, a company incorporated under the Companies Act, 1956 having its registered office at

through its Authorised Signatory authorized by the company vide its authorization letter, dated : 30th November 2016 (Which expression shall unless repugnant to the context or meaning thereof include its successors in office, administrators and assignees) party of the second part (herein after called as 'Lessee')

The Government of Andhra Pradesh has allotted the land described in the schedule attached to NREDCAP for establishment of Wind Power Project on lease duly collecting the lease rent for a period of 33 years, the NREDCAP in turn will allot the land to the third party, vide GO. Ms. No. 406, Revenue (Assignment V) Department, dated: 09.12.2014.

WHEREAS;

(A) The New and Renewable Energy Development Corporation of AP Ltd., (NREDCAP) is a nodal agency, which has been incorporated in the year 1986 with sole objective to encourage the generation of electricity through Renewable Energy sources like Wind, Solar, helping in energy conservation, facilitate adoption and import of viable technology in the areas of non-conventional energy sources and also to impart training and to promote Research & Development in the field of non-conventional energy sources and has been working hard to achieve these objectives.

(B) The Government of Andhra Pradesh has issued uniform guidelines with regard to Government land to be allotted for various purposes, vide GO.Ms.No. 571, Revenue (Assignment I) Department, dated: 14.09.2012. In the said GO, land will be allotted for wind power projects to the private developers on lease basis for a period of 25 years.

(C) M/s is a developer of Wind Power projects and was allotted 16 MW Capacity by NREDCAP on 25.08.2011. NREDCAP has forwarded the proposals of M/s for allotment of Ac. 35 Revenue land in Talaricheruvu Village, Aluru, Village and Sazzalidinne Village, Tadipatri Mandal, Anantapur District for establishment of 16 MW

For New & Renewable Energy Development Corporation of Andhra Pradesh Ltd.

Vice Chairman & Managing Director

capacity Wind Power Project jointly in favour of NREDCAP and Developer as per GO.MS .No. 571, Revenue (Assignment I) Department, dated: 14.09. 2012.

(D) The Government of Andhra Pradesh vide GO. Ms. No. 406, Revenue (Assignment V) Department, dated: 09.12.2014 has allotted the Government land to an extent of Ac. 25 in Sy.No. 720-1, 720-3, 721-1, 721-3, 722-1, 722-3, 723, 724-1, 724-3, 720-5 (each Ac. 2.50), Sy.No. 1574 (Ac. 2.50), Sy.No. 1327, 1328, 1329 (Ac. 2.50),

situated at Talaricheruvu Village, Sajjaladinne Village and Aluru Village, Tadipatri Mandal, Anantapur District, on lease basis for a period of 33 years duly collecting the lease rent in favour of NREDCAP for establishment of wind power project, the NREDCAP will in turn will allot the land to the third party on lease basis and monitor the utilization of land (hereinafter referred to as "the " Scheduled Property"", which is fully described in the Schedule-1 (attached hereto)

(E) Now, the NREDCAP has agreed to execute this lease deed in favour of

Pursuant to above and in compliance with policies and procedures as laid down, the NREDCAP LTD, State Nodal Agency handed over the possession of the Scheduled Property mentioned in the Schedule-1 to the Lessor vide. NREDCAP/ATP/WD/ / , dated:23.05.2015 after receiving the lease rental amount Rs. 7,00,000/- (Rupees Seven Lakhs Only) for first year paid by the for the schedule mentioned Scheduled Property.

NOW THIS DEED OF LEASE WITNESSETH AS FOLLOWS -

(1) The government has fixed the market value @ 2,00,000/- (Rupees Fifty Thousand Only) per acre as per GO.Ms.No. 406, Revenue (Assignment V) Department, dated 09.12.2014 and the Lessee has to pay 10% on the market value i.e. Rs. 20,000/- per acre. Therefore, the lease rental amount for Ac. 35.00 x Rs. 20,000 = Rs. 7,00,000/- (Seven Lakhs Only) per year.

For New & Renewable Energy Development Corporation of Andhra Pradesh Ltd.

Vice Chairman & Managing Director

(2) In this regard the District Collector, Anatapuramu issued proceedings, vide its no. Rc.E3/10395/2013, dated: 25.11.2013 to the Lessee to pay the total lease rental amount of Rs. 7,00,000/- (Rupees One Lakh Five Thousand Only) per year for Scheduled Property.

(3) The Lessee i.e. M/s , should pay an amount of Rs. 7,00,000/- (Rupees Seven Lakhs Only) to the Revenue department, Govt. of Andhra Pradesh and has to submit the receipts to the Lessor for remaining 4 years for the first block of 5 years. For remaining blocks also the Lessee should pay the enhanced lease rental amount increasing up to 10% as fixed by the competent authority on the lease rental of the previous block of 5 years from time to time directly to the revenue department and submits the receipts to the Lessor.

(4) The Lessor has handed over the possession of the Scheduled Property with effect from 23th May 2015 situated at Talaricheruvu Village, Sajjaladinne Village and Aluru Village, Tadipatri Mandal, Anantapur District, in Andhra Pradesh.

(5) The Lessee acknowledges and confirms that it has been handed over unrestricted, absolute, vacant and peaceful physical possession of the Scheduled Property, on an exclusive basis by the Lessor. The 16MW capacity Wind Power Project was commissioned on the 27th of August 2016.

(6) The Lessee shall use the Scheduled Property for wind power project only. The Lessee shall not use or sub-lease this lease except for the said purpose mentioned under this lease deed.

(7) The Lessee shall be entitled to use the Scheduled Property as a part of the wind power project , installation of Wind Turbine Generators (WTGs) and carry on the activity of electricity generation generated by such WTG. (The Lessee shall have the sole and exclusive ownership to anything installed (movable or fixed inclusive) on the Scheduled Property during and after the tenure of the lease)

For New & Renewable Energy Development Corporation of Andhra Pradesh Ltd.

Vice Chairman & Managing Director

(8) The Lessee i.e M/s shall not do any act, which is destructive, or permanently injurious to the Scheduled Property.

(9) The Lessee shall maintain the said Scheduled Property in a clean and sanitary condition to the satisfaction of the Government of Andhra Pradesh and shall also maintain the structures, if any, erected thereon as aforesaid, in good, and substantial repair to the satisfaction of the Deputy Commissioner.

(10)The Lessee shall permit the officers and servants of the Government of Andhra Pradesh with or without workmen at all times to enter upon the Scheduled Property aforesaid to view the condition and state thereof.

(11)The Government reserve to themselves the right to all trees and their branches and roots which exist at the time of lease (which are described in the schedule attached) as well as those which may grow subsequently on the lands leased and the Government shall be at liberty to cut or dig out any such trees or their roots and branches and remove them from the land in question, be entitled to cut or remove them or cause them to be cut or removed without the permission competent authority. However, such activities shall be carried out by the authorised officials of the Government of Andhra Pradesh without affecting the work/project and other interests of the Lessee.

(12)The Lessee may uproot, cut down or destroy such trees, plants, groves or bushes as in the opinion of the competent authority it is necessary to uproot, cut down or destroy to make the land fit for the purpose of erection of wind electric generators and infrastructure development such as road for same and may take them free of charges and dispose of them in any manner he likes. The Lessee may level the ground by removing embanked pathways and filling up low-lying places on the land so as to make the ground fit for the purpose of erection of wind electric generators and infrastructure development such as road for same and cut the grass thereon and

For New & Renewable Energy Development
Corporation of Andhra Pradesh Ltd.

Vice Chairman & Managing Director

dispose off the same in any manner he likes and do any work on the land which, in the opinion of the Government, is necessary for such purposes.

(13)The Lessee shall follow the instructions given by the competent authority/Revenue Dept. / NREDCAP from time to time.

(14)After completion of the project the Lessee (M/s) shall withdraw its rights over the Scheduled Property as per GO.Ms.No. 571, dated: 14.09.2012.

(15) **Lessee** may assign or mortgaged its leasehold right in favour of any institution or institutions for the purpose of availing of financial assistance for establishment of wind power projects as sanctioned by NREDCAP/ Govt.

(16)<u>AMENDMENTS</u>

Neither this Deed nor any term, covenant, condition or other provisions hereof may be waived, amended, varied, modified, supplemented, discharged or terminated except by an instrument, in writing, signed by a duly authorized officer on behalf of each of the Parties.

// <u>SCHEDULE</u> //

Sl.No.	District	Mandal	Village	Sy.No	Extent (in Ac.)
1	Anantapur	Tadipatri	Talaricheruvu	720-1	2.50
2				720-3	2.50
3				721-1	2.50
4				721-3	2.50
5				722-1	2.50
6				722-3	2.50
7				723	2.50
8				724-1	2.50
9				724-3	2.50
10				720-5	2.50
11			Sajjaladinne	1574	2.50
12			Aluru	1327	2.50

For New & Renewable Energy Development Corporation of Andhra Pradesh Ltd.

Vice Chairman & Managing Director

13				1328	2.50
14				1329	2.50
Total Extent (in Ac.)					**35**

IN WITNESS WHEREOF the Parties hereto have executed this Lease Deed as of the day and year first herein above written by their undersigned duly authorized representatives.

For New & Renewable Energy Development Corporation of Andhra Pradesh Ltd.

Vice Chairman & Managing Director

SIGNED AND DELIVERED

By the within named "Lessee"

M/s

Name:

Authorized Signatory

Signed

SIGNED AND DELIVERED

By the within named "Lessor"

NREDCAP

Name:

Authorized Signatory

In the presence of: -

1. P.V. Ramesh, P.D, NREDCAP, Hyderabad
2. (MIRZA, HYD)

TRANSMISSION CORPORATION OF ANDHRA PRADESH LIMITED
Vidyut Soudha :: Hyderabad

From:
Executive Director
Planning,RAC & Reforms
APTRANSCO, Vidyut Soudha,
Khairatabad, Hyderabad - 500082

To,
M/s.

Lr.No.ED(Plg,RAC&Ref)/ADE-C/F. / DNo.57/14, Dt:14.02.14

Sir,

Sub: M/s. – Connectivity / Evacuation of 16MW Wind Power Project at Tallaricheruvu(V), Tadipatri (M), Ananthapur District – Approval accorded –Reg.

Ref: 1. Your Application Dt: 25.08.2011
2. Chief Minister's office Lr dt: 06.12.2013.

* * *

It is to inform that, APTRANSCO has accorded connectivity to your wind power project for evacuating power from the proposed 16 MW Wind Power Project being set-up at Tallaricheruvu(V), Tadipatri (M), Ananthapur District at 33KV level to the existing 132/33KV Ankireddypalli APTRANSCO SS.

For evacuation of wind generation, you are requested to lay 33KV line as follows, subject to the following conditions.

I. The developer has to lay 33KV line from generating site and shall connect radially to 132/33KV Ankireddypalli SS. Cost of laying of lines including bay at Ankireddypalli SS is to be borne by the developer as per the regulation in vogue.

II. The land required for 33 KV Bay extensions at APTRANSCO Substations is to be procured by the developer at his own cost and the land is to be handed over to APTRANSCO.

III. The Tariff meters (Main, Check and Standby) are to be provided at 132/33KV Ankireddypally SS as per the APERC wind guide lines, APERC regulation 4 of 2013 and respective agreement conditions.

IV. Further, as per the clause No 4.6.2 of Indian Electricity Grid Code 2010, it is mandatory to provide data to SLDC prior to

charging of the equipment. As per the clause 5.2(u) of Indian Electricity Grid Code 2010, Data Acquisition System facility shall be provided and transfer of information to concerned SLDC and RLDC for Solar/wind generators. Hence it is requested to provide the necessary Data Acquisition System along with necessary communication system to communicate with ALDC/SLDC for the proposed Wind Generation Project. Presently it should communicate to ALDC/SLDC on IEC 60870-5-101(Serial) protocol and provision to upgrade to IEC 60870-5-104 (TCP/IP) protocol as the SLDC is Scheduled to be upgraded in near future.

V. Backing down of generation as per needs of Grid, i.e. subject to availability of grid corridor, till proposed network i.e. comprehensive wind evacuation scheme in operation.

VI. The Developer has to synchronize the above wind Power plants only after commissioning of 220KV Muddanur to Chinakampally Twin Moose DC Line.

VII. Hence, you are requested to submit an undertaking on Rs100/- Non Judicial Bond paper for accepting the above terms and conditions.

Further, you are requested to submit your consent to take up the work by APCPDCL duly paying the cost of estimate OR on turnkey basis duly paying the supervision charges, Engineering Charges, Service tax and cost of spares to APCPDCL.

It is requested to submit the consent letter to the Superintending Engineer/Operation/APCPDCL/Ananthapur for preparing the detailed estimate.

The Chief General Manager/Comml &RA/APCPDCL is requested to process the estimate only after receipt of the consent letter and Undertaking from the developer by this office.

Yours faithfully,

B.V. Shanthi 14/2/14

Executive Director
Planning, RAC & Reforms

Copy to:

Chief General Manager/Commercial/APCPDCL/MC/Hyderabad
Chief General Manager/Operation/APCPDCL/Kurnool
Chief Engineer/ Construction-2/ APTRANSCO/VS/Hyderabad
Chief Engineer/IPC/APPCC/VS/Hyderabad
Chief Engineer/SLDC/APTRANSCO/VS/Hyderabad
Chief Engineer/Power Systems/APTRANSCO/VS/Hyderabad
Chief Engineer/Zone/APTRANSCO/Kadapa
Superintending Engineer/Operation/APCPDCL/Ananthapur
Superintending Engineer/Operation/APCPDCL/Kurnool
Superintending Engineer/O&M/APTRANSCO/Kurnool
Divisional Engineer/Operation/APCPDCL/Kalyanadurg/Ananthapur Dist
Divisional Engineer/EHT L&SS/APTRANSCO/Kurnool
Divisional Engineer/MRT TL&SS/APTRANSCO/ Kurnool
PS to Director (Projects)/APTRANSCO/VS/Hyderabad.
PS to JMD (HRD, Comml, IPC & IT)/APTRANSCO/VS/Hyderabad.

Note:

The CPDCL Authorities are requested to prepare the detailed Estimate and clearly indicated the charges to be paid by Developer to APCPDCL & APTRANSCO. After receipt of the requisite charges, the amount pertaining to APTRANSCO may be transmitted to Chief Engineer/Zone/ Kadapa as per the Lr dt CPT 150/SE/PM-2/NCE Power/D.No:696/2011 Dt: 13.06.2011. (enclosed for ready reference)

The APTRANSCO Authorities are requested to identify the works to be carried out by the developer and arrange a MOM and collect an under taking on Rs100/- non Judicial Bond paper and forward the same to this office.

Further the developer has to procure the bay equipment at Ankireddy pally ss as per the technical specification of APTRANSCO from approved vendor of APTRANSCO only.

भारतीय गैर न्यायिक

एक सौ रुपये Rs. 100

रु. 100 ONE HUNDRED RUPEES

सत्यमेव जयते

भारत INDIA

INDIA NON JUDICIAL

ఆంధ్రప్రదేశ్ आन्ध्र प्रदेश ANDHRA PRADESH

BN 400886

SL.No.192.Date.08-01-2015. R/o.HYD.

Sold to.

S/o.

For Whom:

MOHD SARDAR KHAN

STAMP VENDOR

Lic No.16-11-1/2011-Ren.No.07/2014

6-3-597/2, A.K. Residency,

Venkataramana Colony, Khairatabad,

Hyderabad-4 (South) Cell No : 9949820001

MEMORANDUM OF UNDERSTANDING

Memorandum of understanding Between M/s Transmission Corporation of Andhra Pradesh Limited and M/s for connectivity/evacuation approval.

This Memorandum of understanding (herein referred to as "MOU") is entered on 9.1.2015 at Hyderabad.

BETWEEN

M/s TRANSMISSION CORPORATION OF ANDHRA PRADESH LIMITED, on one part (which expression shall mean and include its successors, legal representatives and assignees etc.,) hereinafter called APTRANSCO, represented by its Chairman and Managing Director, or its nominee having its office at Vidyut Soudha, Khairatabad, Hyderabad 500 082.

AND

B.V. Shanthi Sudha

EXECUTIVE DIRECTOR

HRD & Planning

APTRANSCO, Vidyut Soudha

HYDERABAD - 500 082

represented by Mr , authorized signatory (which expression shall mean includes its successors, legal representatives and assignees etc.,)

Both being collectively referred as "Parties"

Now, therefore, it is hereby agreed by and between the parties hereto as under:

1. NREDCAP Capacity Allocation to M/s for 16 MW at Tallaricheruvu Village, Tadipatri Mandal in Anantapur District and entered a Agreement on dt:25.08.2011

2 APTRANSCO has given connectivity to the 132/33KV Ankireddipally Substation, Kurnool District at 33KV Level by laying DC/SC Line from the Wind Power Plant Pooling Station.

3. M/s has submitted the Bank Guarantee for Rs.80 Lakhs (Rupees Eighty Lakhs Only) for 16 MW as per APERC Directions, (State Bank of Bikaner and Jaipur, BG No: 1062514BG0000002, Dt 27.06.14, BG No: 1062514BG0000003, Dt:30.07.14, BG No: 1062514BG0000004, Dt:28.08.14, BG No: 1062514BG0000005, Dt:26.09.14), with conditions here under.

4. M/s has to enter into PPA within 12 months of MOU date and COD within 12 Months from PPA Date, which is a total of 24 months from the date of signing the MOU, in default APTRANSCO is entitled to forfeit BG to the extent of Capacity if PPA is not signed or COD is not achieved.

6. This MOU shall be valid for a period of 24 months from the date hereof and may be extended mutually consent between the two parties, upon APTRANSCOs reviewing the work progress as per the schedule.

7 During the validity of this MOU/PPA, APTRANSCO shall not make connectivity to any other applicant/ firm for any purpose whatsoever, but however APTRANSCO shall have the right to allocate connectivity to other developer if the developer fails to achieve milestones indicated above.

B.V. Shanthi Sekhar

EXECUTIVE DIRECTOR
HRD & Planning
APTRANSCO, Vidyut Soudha
HYDERABAD - 500 082

8. All the disputes arising out of this MOU shall be settled under the Jurisdiction of APERC/Hyderabad Courts.

IN WITNESS WHEREOF, The Parties above have set their hands and signed this MOU on this 9-1-2015 (Date) above mentioned.

DEVELOPER

APTRANSCO

B. V. Shanti Sudha

EXECUTIVE DIRECTOR
HRD & Planning
APTRANSCO, Vidyut Soudha
HYDERABAD - 500 082

Witness

1.

2.

SOUTHERN POWER DISTRIBUTION COMPANY OF A.P. LIMITED
TIRUPATI

From

The Chief General Manager,
P&MM & IPC, APSPDCL,
Ragavendra Nagar,
Kesavayanagunta
Tiruchanoor Road,
Tirupati

To

Lr.No.APSPDCL/TPT/GM/IPC/F. /D.No.408/15,dt:28.4.2015

Sir,

Sub:- 16 MW Wind Power Plant at Tallaricheruvu (V) Tadipatri Mandal at Anantapuram District setup by M/s. – Entering of PPA – Reg.

Ref: Company's letter dated 18.03.2015 & 13.04.2015

* * *

With reference to the letter cited above, it is to inform that the APSPDCL has accorded permission to enter into PPA in respect of 16 MW Wind Power plant at Tallaricheruvu (V) Tadipatri Mandal in Anantapuram District in the standard format approved by APERC.

Hence, it is requested to depute the authorized representative of your Company to this office along with rubber stamp of the authorized signatory of your project, 2 nos Non-judicial stamp papers worth of Rs. 100/- each and certified copy of the Board resolution passed by the Board of Directors on any convenient working day duly contacting the undersigned to enter into the PPA with APSPDCL in the standard PPA format approved by APERC.

28/4/15

CHIEF GENERAL MANAGER
P&MM & IPC
APSPDCL:: TIRUPATI

Copy to the Chief Engineer/ IPC/APPCC/ Vidyuth Soudha/ Hyderabad

ANDHRA PRADESH ELECTRICITY REGULATORY COMMISSION
HYDERABAD

Order No.03 of 2015 dated 01-08-2015

(Suo-motu)

Present: Justice G. Bhavani Prasad - Chairman
Dr. P. Raghu - Member
Sri. P. Rama Mohan - Member

In the matter of notifying the generic preferential tariff applicable from 31st July 2015 till 31st March 2016 in respect of Wind Power Projects in the State of Andhra Pradesh pursuant to Regulation 6 of Regulation No.1 of 2015

In compliance with the statutory mandate of Section 61 (h) and Section 86 (1) (e) of the Electricity Act, 2003 and in accordance with the Andhra Pradesh Electricity Regulatory Commission (Terms and Conditions for Tariff Determination for Wind Power Projects) Regulations, 2015 (Regulation No.1 of 2015) in general and Regulation No.6 thereof in particular and the principles and parameters prescribed therein for determination of generic preferential tariff on suo-motu basis for wind power projects and in exercise of the powers conferred under Regulation No.24 of the said Regulations and Regulation No.55 of the Andhra Pradesh Electricity Regulatory Commission (Conduct of Business) Regulations, 1999 (Regulation No.2 of 1999) and all other powers hereunto enabling, the Andhra Pradesh Electricity Regulatory Commission makes the following order:

As per Regulation 6 of Andhra Pradesh Electricity Regulatory Commission (Terms and Conditions for Tariff Determination for Wind Power Projects) Regulations 2015, the generic preferential tariff applicable for FY2015-16 shall be notified soon after the publication of the regulations in the Official Gazette to be applicable with effect from the date of the regulations coming into force.

Before making Regulation No.1 of 2015, public notice was given and after considering all the suggestions and objections received from the public and the stakeholders, the said Regulation has been notified. The parameters for fixation of tariff specified therein work themselves out in arriving at the generic preferential tariff for the FY2015-16 as a necessary consequence, which is hence, a matter of mere arithmetical computation in implementation of and in compliance with the provisions of Regulation No.1 of 2015.

Accordingly, the parameters taken into consideration as per the Regulation No. 1 of 2015 for determination of tariff are as hereunder:

	Parameter	Value
A	Tariff Period	25 years
B	Useful Life	25 years
C	Capital Cost	`600 lakhs / MW (including evacuation cost)
D	O & M Expenses	`8.57 lakhs / MW
E	O&M Expenses' Escalation	7.52% p.a.
F	Depreciation for the first 10 years	7% p.a.
G	Depreciation for the remaining useful life of the plant	1.33 % p.a.
H	Capacity Utilization Factor (CUF)	23.5%
I	Return on Equity	16%
J	Interest Cost on Debt	13%
K	Tenure of Loan	10 years
L	Interest on Working Capital	13.5%
K	Debt Equity Ratio	70 : 30
L	Discount Rate	10.81%

Based on the above parameters and considering the useful life of the Wind Power Plants as 25 years, the levelised generic preferential tariff works out to `4.83 / unit without considering the accelerated depreciation and `4.25 with accelerated depreciation. The Commission accordingly, notifies the levelised generic preferential tariff as follows:

Tariff without AD benefit	Tariff with AD benefit
`4.83	`4.25

This tariff shall be applicable for all the new wind power projects entering into Power Purchase Agreements (PPA) on or after the date of notification of the Regulations in the Official Gazette of the Govt. of Andhra Pradesh i.e., 31-07-2015.

This order is signed, dated and issued by the Andhra Pradesh Electricity Regulatory Commission.

(By Order of the Commission)

Sd/-
Dr. A. Srinivas
Commission Secretary (i/c)

0SOUTHERN POWER DISTRIBUTION COMPANY OF A.P. LIMITED
TIRUPATI

From
The Chief General Manager,
P&MM & IPC, APSPDCL,
Ragavendra Nagar,
Kesavayanagunta
Tiruchanoor Road,
Tirupati

To

Lr.No.APSPDCL/TPT/GM/IPC/F. 328/D.No. 823/16,dt: 06.09.2016

Sir,

Sub: 16.0 MW Wind power project set up by
at Tallaricheruvu (V), Tadipatri (M) Anantapur District -
Commercial Operation Date (COD) of the plant – Reg.

Ref: 1. Company's letter dated :
2 Wind power plant commissioning certificate Signature of all the officers received on 2.9.2016.

****

After taking into consideration of the request made by M/s and wind power plant commissioning certificate signed by all the Officers who attended for synchronization of the plant, the developer is permitted to declare Commercial Operation Date (COD) of 16.0 MW Wind Power project at Tallaricheruvu (V), Tadipatri (M) Anantapur District, Andhra Pradesh with effect from the date of synchronization of the first unit of the project to the Grid. (As per Article 1.4 of PPA) i.e., with effect from 27.8.2016.

CHIEF GENERAL MANAGR
P&MM&IPC
APSPDCL :: TIRUPATHI

Copy transmitted to the Chief Engineer/IPC/APPCC/VS/Hyderabad
Copy transmitted to the Chief Engineer /SLDC/APTRANSCO/VS/Hyderabad
Copy to the Dy CCA/APTRANSCO/VS/Hyderabad
Copy to the Superintending Engineer/Operation/APSPDCL/Anantapuram
Copy to the Superintending Engineer /OMC/APTRANSCO Anantapuram
Copy transmitted to the Chief Engineer/Zone/APSPDCL/Kurnool
Copy to the Divisional Engineer /Wind Farm/220 KV SS/ Bokkarayasamudram Anantapuram
Copy to the Executive Director/Plg&HRD/VS/Hyderabad
Copy transmitted to the Chief Engineer /Zone APTRANSCO/Kadapa

भारतीय गैर न्यायिक

एक सौ रुपये Rs. 100

रु. 100 ONE HUNDRED RUPEES

सत्यमेव जयते

भारत INDIA

INDIA NON JUDICIAL

తెలంగాణ तेलंगाना TELANGANA

E 447294

Sl.No. 11665 Date : 26-4-2016
Sold to :
S/o.
For Whom :

P. Sandhya Rani
LICENCED STAMP VENDOR
LIC. NO : 16-04-19/2013
Ren. No : 16-04-07/2016
H.No. 8-2-238, Road No.1,
Banjara Hills, Hyderabad-34 (South)
Ph No 9246274099

POWER PURCHASE AGREEMENT
BETWEEN
SOUTHERN POWER DISTRIBUTION COMPANY OF A.P. LIMITED
AND

This Power Purchase Agreement (the "Agreement") entered into this 27th day of April 2016 between Southern Power Distribution Company of AP Limited (DISCOM), incorporated by the Government of Andhra Pradesh in accordance with the Andhra Pradesh Electricity Reform Act 1998 (Act No.30 of 1998), under the provisions of Companies Act, 1956, having its office at19-13-65/A, Ragavendra Nagar, Kesavayana Gunta, Tiruchanoor Road, Tirupati, Pin – 517501, AP, India,, hereinafter referred to as the "DISCOM" (which expression shall, unless repugnant to the context or meaning thereof, include its successors and assigns) as first party, and

hereinafter referred
; "Wind Power Producer" (which expression shall, unless repugnant

CHIEF GENERAL MANAGER
P & MM & IPC
APSPDCL :: TIRUPATI

to the con-text or meaning thereof, include its successors and assigns) as second party.

2. WHEREAS, the Wind Power Producer is setting up the New and Renewable Energy Project i.e., the 16 MW capacity Wind power project at Tallaricheruvu (V) Tadipatri Mandal, Anantapuram District, Andhra Pradesh (hereafter called the Project,) with a proposal of 0.08 MW for Auxiliary Consumption and 15.92 MW for export to grid for Sale to DISCOM as detailed in Schedule 1 attached herewith, and New and Renewable Energy Development Corporation of Andhra Pradesh Limited hereafter referred to as M/s NREDCAP has accorded approval to the said project in their proceedings No. NREDCAP/WE/ , Dated 25.08.2011 and NREDCAP/WE/ , dt.15.04.2015 and the Wind Power Producer has entered into an Agreement with NREDCAP on 25.08.2011 and the copies whereof are attached herewith as Schedule-II and Schedule III respectively;

3. WHEREAS, it has been agreed that the Project will be designed, engineered and constructed and operated by or on behalf of the Wind Power Producer or its successors with reasonable diligence subject to all applicable Indian laws, rules, regulations and orders having the force of law;

4. Whereas, the proposed Project is being setup at Tallaricheruvu (V) Tadipatri Mandal, Anantapuram District, and will be connected to the designated sub-station i.e., 132/33 KV Ankireddipalli at 33KV voltage level for power evacuation from wind power projects by erecting an exclusive 33KV dedicated feeder. The project will share a common metering on the above feeder at the designated sub-station. The project will also have a separate metering at project's switchyard.

5. The terms and conditions of the Agreement are subject to the provisions of the Electricity Act, 2003 (36 of 2003) and the amendments made to the act from time to time, and also subject to regulation by the APERC.

6. NOW THEREFORE, in consideration of the foregoing premises and their mutual covenants herein, and for other valuable consideration, the receipt and sufficiency of which are acknowledged, the parties hereto, intending to be legally bound hereby agree as follows:

CHIEF GENERAL MANAGER
P & MM & IPC
APSPDCL :: TIRUPATI

ARTICLE 1

DEFINITIONS

As used in this Agreement, the following terms shall have the meanings set forth herein below. Defined terms of singular number shall include the plural and vice-versa.

1.1 **APTRANSCO:** Transmission Corporation of Andhrapradesh Limited, incorporated by the Government of Andhrapradesh.

1.2 **Billing Date:** means the fifth (5th) day after the Meter Reading Date.

1.3 **Billing Month:** means the period commencing from 25th of the calendar month and ending on the 24th of the next calendar month.

1.4 **Commercial Operation Date (COD):** means, with respect to each Generating unit, the date on which such Generating unit is declared by the Wind Power Producer to be operational, provided that the Wind Power Producer shall not declare a Generating unit to be operational until such Generating unit has completed its performance acceptance test as per standards prescribed.

Explanation: In respect of Non-conventional based power projects the date of synchronization of the first unit of the project will be treated as the Commercial Operation Date of the project.

1.5 **Delivered Energy:** means, with respect to any Billing Month, the kilo watt hours (kWh) of electrical energy generated by the Project and delivered to the DISCOM at the Interconnection Point as defined in Article 1.11, as measured by the energy meter at the Interconnection Point during that Billing Month.

Explanation 1: For the purpose of clarification, Delivered Energy, excludes all energy consumed in the Project, by the main plant and equipment, lighting and other loads of the Project from the energy generated and as recorded by energy meter at Interconnection Point.

Explanation 2: The delivered energy in a Billing Month shall be limited to the energy calculated based on the Capacity agreed for export to network for sale to DISCOM as mentioned in Preamble and Schedule – 1, multiplied with number of hours and fraction thereof the project is in operation during that billing month. In case any excess energy is delivered no payment shall be made for the same.

1.6 **Designated Sub-station**: means 132/33 KV Ankireddypalli sub-station of APSPDCL /APTRANSCO.

CHIEF GENERAL MANAGER
P & MM & IPC
APSPDCL :: TIRUPATI

1.7 **Due Date of Payment:** means the date on which the amount payable by the DISCOM to the Wind Power Producer hereunder for Delivered Energy, if any, supplied during a Billing Month becomes due for payment, which date shall be thirty (30) days from the Meter Reading Date provided the bill is received by DISCOM within 5 days from Meter Reading Date, and in the case of any supplemental or other bill or claim, if any, the due date of payment shall be thirty (30) days from the date of the presentation of such bill or claim to the designated officer of the DISCOM.

1.8 **Financial Year:** shall mean, with respect to the initial Fiscal Year, the period beginning on the Commercial Operation Date and ending at 12.00 midnight on the following March 31. Each successive Financial Year shall begin on April 1 and end on the following March 31, except that the final Fiscal Year shall end on the date of expiry of the Term or on termination of this Agreement, whichever is earlier.

1.9 **Installed Capacity:** means the total rated capacity in MW of all the Wind Energy Generators installed by the Wind Power Producer.

1.10 **Interconnection Facilities:** means all the equipment and facilities, including, but not limited to, all metering facilities, switchgear, substation facilities, transmission lines and related infrastructure, to be installed at the voltage specified in Article 1.20 at the Wind Power Producer's expense from time to time throughout the term of this Agreement, necessary to enable the DISCOM to economically, reliably and safely receive Delivered Energy from the Project in accordance with the terms of this Agreement. As indicated in the preamble, the interconnection facilities beyond Project's switchyard shall be common for Wind Power Producer group projects connected to the designated Substation.

1.11 **Interconnection Point:** means the point or points where the Project and the APTRANSCO's / DISCOM network are interconnected. For this project, interconnection point is at the designated Sub-station. The metering for the Project will be provided at the interconnection point as per Article 4.1. As indicated in the Preamble of this Agreement, Interconnection point for this Project is at designated Sub-station.

1.12 **Meter Reading Date:** means mid-day (i.e., noon) of the 24th (twenty-fourth) day of each calendar month, at the Interconnection Point.

1.13 **Metering Point:** means points where metering shall be provided for Project and shall be as follows:

(i) Common meter provided at the Interconnection Point for purposes of recording of Delivered Energy of the Project;

(ii) Individual meter provided at Project's switchyard;

CHIEF GENERAL MANAGER
P & MM & IPC
APSPDCL :: TIRUPATI

(iii) Metering point shall include two separate sets of 0.2/0.2S class accuracy electronic tri-vector meters as specified in Article 4.1, main meter installed by the Wind Power Producer and the check meter installed by the DISCOM and both sealed by the DISCOM, having facilities to record both export and import of electricity to / from the grid.

1.14 **Project:** means the 16 MW capacity Wind power project at Tallaricheruvu (V) Tadipatri Mandal in Anantapuram District, Andhra Pradesh with a proposal of 0.08 MW for Auxiliary Consumption and 15.92 MW for export to network for Sale to DISCOM as entrusted to the Wind Power Producer for construction and operation as detailed in Agreement entered into with NREDCAP as shown in Schedule 3 attached herewith and includes the metering system.

1.15 **Prudent Utility Practices:** means those practices, methods, techniques and standards, that are generally accepted for use in electric utility industries taking into account conditions in India, and commonly used in prudent electric utility engineering and operations to design, engineer, construct, test, operate and maintain equipment lawfully, safely, efficiently and economically as applicable to power stations of the size, service and type of the Project, and that generally conform to the manufacturers' operation and maintenance guidelines.

1.16 **SLDC:** means the State Load Dispatch Center as notified by the State Government under the provisions of the Electricity Act 2003.

1.17 **System Emergency:** means a condition affecting the APTRANSCO's/ DISCOM's electrical network which threatens the safe and reliable operation of such system or which is likely to result in the disruption of safe, adequate and continuous electric supply by the APTRANSCO/DISCOM, or which endangers life or property, which condition is affected or aggravated by the continued delivery of Delivered Energy from the Project.

1.18 **Surcharge on Reactive Power drawn by Wind Farms:** means the charges leviable on the reactive power drawn by Wind Farms at the rate of 25 paise (twenty five paise) per KVARh of reactive energy drawn from grid upto 10% of net active energy generated and 50 paise per KVARh for total drawl if reactive energy drawn is more than 10% of net active energy generated. The above mentioned rates are subject to revision as per APERC orders from time to time.

Explanation 1: Induction generators used in Wind Farms draw reactive power from grid during generator mode and motor mode.

Explanation 2: Surcharge on reactive power drawn by Wind Farms will be

CHIEF GENERAL MANAGER
P & MM & IPC
APSPDCL :: TIRUPATI

levied on the Wind Power Producer.

1.19 **Unit:** When used in relation to the generating equipment, means one set of turbine generator and auxiliary equipment, and facilities forming part of the project and when used in relation to electrical energy, means kilo watt hour (kWh).

1.20 **Voltage of Delivery:** means the voltage at which the electrical energy generated by the project is required to be delivered to the APTRANSCO at the Interconnection Point and the Voltage of Delivery is as detailed below:

(Note: Insert Table A or Table B whichever is applicable)

TABLE - A

At 33 KV level:

Project interfacing		Specified type of AAAC Conductor (size)	Proposed Wind power capacity on each 33 KV Line
From	**To**		
Wind project	Existing 33/11 KV DISCOM SS	55 sqmm	8 MW
		100 sqmm	10 MW *
		150 sqmm	
Wind project	EHT Pooling SS or existing EHT APTRANSCO SS	55 sqmm	8 MW
		100 sqmm	12 MW
		150 sqmm	17 MW **

* *Capacity is restricted consistent with capacity of DISCOM SS.*

** *As amended vide Commission's order dated 11-07-2012 in O.P.No. 7 of 2012 read with letter dated 04-06-2014 attached herewith as Schedule - IV*

CHIEF GENERAL MANAGER
P & MM & IPC
APSPDCL :: TIRUPATI

TABLE - B

At EHT level:

Project interfacing		**EHT Level**	**Proposed Wind power capacity**
From		**To**	
Pooling SS	Existing APTRANSCO EHT SS	132 KV	(i) Up to 50 MW on SC Line (ii) Above 50 MW to 100 MW on DC Line
Pooling SS	Existing APTRANSCO EHT SS	220 KV	Above 100 MW

This Project will generate electrical energy at 690 Volts, which will be stepped up to 33 KV at Project's switchyard and interconnected to the designated sub-station 132/33 KV Ankireddipalli Substation of APSPDCL/APTRANSCO, at 33 KV voltage level for power delivery to the grid.

1.21 All other words and expressions used herein and not defined herein but defined in Indian Electricity Rules 1956, AP Electricity Reform Act, 1998 and the Electricity Act, 2003 shall have the meanings respectively assigned to them in the said Acts.

CHIEF GENERAL MANAGER
P & MM & IPC
APSPDCL :: TIRUPATI

ARTICLE 2

PURCHASE OF DELIVERED ENERGY AND TARIFF

2.1 All the Delivered Energy at the interconnection point for sale to DISCOM will be purchased at the tariff provided for in Article 2.2 from and after the date of Commercial Operation of the Project. Title to Delivered Energy purchased shall pass from the Wind Power Producer to the DISCOM at the Interconnection Point.

2.2 The Wind Power Producer shall be paid tariff for energy delivered at the interconnection point for sale to DISCOM, which shall be firm at Rs.4.84 per unit without considering Accelerated Depreciation for a period of 25 Years from the Commercial Operation Date (COD) as per APERC order dated 26.03.2016 in O.P. No. 13 of 2016

2.3 Tariff Determined under these regulations shall be exclusive of taxes and duties as may be levied by the Government.

Provided that the taxes and duties levied by the Government shall be allowed as pass through on actually incurred basis.

2.4 Income tax/ MAT is a pass through and is to be paid by the Distribution Licensees to the developer upon receipt of the claim from the developer. This is over and above the tariff determination made here in.

Electricity Duty is a pass through and is to be paid by the Distribution Licensees to the developer upon receipt of the claim from the developer. This is over and above the tariff determination made herein.

2.5 Where in any Billing month, the energy supplied by the DISCOM to the Wind Power Producer as a bilateral arrangement to maintain the Auxiliaries in the power plant in situations of non-generation of power, shall be billed by the DISCOM, and the Wind Power Producer shall pay the DISCOM for such electricity supplies, at the DISCOM's then-effective tariff applicable to High Tension Category-I Consumers. For this purpose, the maximum demand specified in such DISCOM's Tariff shall be computed by dividing the amount of such energy supplied by the DISCOM by hours of drawl of power from the grid in the Month.

Explanation: The Wind plants during the plant shut down periods shall draw the energy from DISCOM only for the essential loads not exceeding auxiliary consumption.

CHIEF GENERAL MANAGER
P & MM & IPC
APSPDCL :: TIRUPATI

ARTICLE 3

INTERCONNECTION FACILITIES

3.1 Upon receipt of a requisition from the Wind Power Producer, the APTRANSCO and DISCOM will prepare an estimate for arranging interconnection facilities for power evacuation at the voltage level as per Article 1.20. The Wind Power Producer have to bear the entire cost of the interconnection facilities as per the sanctioned estimate. The APTRANSCO and DISCOM shall evaluate, design, and install the Interconnection Facilities and perform all work, at the Wind Power Producer's expense, necessary to economically, reliably and safely connect the grid system to the Project switch yard.

3.2 APTRANSCO and DISCOM may also permit the Wind Power Producer to execute the interconnection facilities for power evacuation as per the sanctioned estimate at it's discretion duly collecting the supervision charges as per procedure in vogue.

3.3 The Wind Power Producer shall own, operate and maintain interconnection facilities from Project to Designated Substation from time to time and necessary expenditure shall have to be borne by the Wind Power Producer. The maintenance work on the Generating units has to be done in coordination with the APTRANSCO and DISCOM.

3.4 The Wind Power Producer shall agree to pay to the DISCOM, on or before signing of this Agreement, at the rate of Rs.37,000/- per MW of Installed Capacity and for fractions thereof on a pro-rata basis as a one time lump sum payment for the sole purpose of providing the required MVAR capacity at the Substation of the APTRANSCO/DISCOM to which the Project is interconnected to supply the requisite reactive power to the Grid System.

APTRANSCO/DISCOM shall install the capacitors of required capacity, at the substation of the APTRANSCO and DISCOM to which the project is interconnected before commercial operation date of the project.

3.5 Any modifications or procedures or changes in arranging interconnection facilities for power evacuations rest with APTRANSCO and DISCOM.

3.6 During the period prior to the Commercial Operation Date, on the request of the Wind Power Producer, the DISCOM will supply energy to the Project for internal consumption, on the Terms and Conditions and at the tariff rates that are applicable from time to time to the category of consumers of the DISCOM to which the Wind Power Producer belongs, provided separate

CHIEF GENERAL MANAGER
P & MM & IPC
APSPDCL :: TIRUPATI

metering arrangements as may be required under the Terms and Conditions of such tariff have been installed at the Project.

CHIEF GENERAL MANAGER
P & MM & IPC
APSPDCL :: TIRUPATI

ARTICLE 4

METERING AND PROTECTION

4.1 The Wind Power Producer shall install main meters of Static type 0.2 / 0.2S class accuracy at the Metering Point and the DISCOM shall install check meters of Static type at the same point and of the same accuracy. The main meters and check meters will each consist of a pair of export and import meters with facility for recording meter readings using Meter Recording Instrument. For the purpose of uniformity the Wind Power Producer shall follow metering specifications as developed by the DISCOM from time to time.

4.2 All of the meters required to be installed pursuant to Article 4.1 above shall be jointly inspected and sealed on behalf of both parties and shall not be interfered with, tested or checked except in the presence of representatives of both parties.

4.3 The meter readings from the main meters will form the basis of billing. If any of the meters required to be installed pursuant to Article 4.1 above are found to be registering inaccurately the affected meter will be immediately be replaced.

4.4 Where the half yearly meter check indicates an error in one of the main meter/meters beyond the limits for such meter but no such error is indicated in the corresponding check meter/meters, billing for the month will be done on the basis of the reading on the check meter/meters and the main meter will be replaced immediately.

4.5 If during the half yearly test checks, both the main meters and the corresponding check meters are found to be beyond permissible limits of error, both the meters shall be immediately replaced and the correction applied to the consumption registered by the main meter to arrive at the correct delivered energy for billing purposes for the period of the one month up to the time of such test check, computation of delivered energy for the period thereafter till the next monthly meter reading shall be as per the replaced main meter.

4.6 Corrections in delivered energy billing, whenever necessary, shall be applicable to the period between the previous monthly meter reading and the date and time of the test calibration in the current month when the error is observed and this correction shall be for the full value of the absolute error. For the purpose of determining the correction to be applied to any meter registering inaccurately, the meter shall be tested under conditions simulating 100, 50, 20 and 10 percent load at unity power

CHIEF GENERAL MANAGER
P & MM & IPC
APSPDCL :: TIRUPATI

factor and 0.5 power factor. Of these eight values, the error at the load and power factor nearest the average monthly load served at the Interconnection Point during the applicable period shall be taken as the error to be applied for correction.

4.7 If both the main and check meters fail to record or if any of the PT fuses are blown out, then the energy will be computed on a mutually agreeable basis for that period of defect.

4.8 The main and check meters shall be tested and calibrated once in a Financial year utilizing a Standard Meter. The Standard Meter shall be calibrated once in every year at the approved Laboratory by Government of India / Government of Andhra Pradesh, as per Terms and Conditions of supply.

4.9 All main and check meters tests shall be jointly conducted by the authorized representatives of both parties and the results and correction so arrived at mutually will be applicable and binding on both the parties.

4.10 On the Meter Reading Date of each month, meter readings shall be taken (and an acknowledgement thereof signed) by the authorized representatives of both parties.

4.11 Within six (6) months following the execution of this Agreement, the Wind Power Producer and the DISCOM shall mutually agree to technical and performance specifications (including, but not limited to, the metering configuration for the Project) concerning the design and operation of the facilities required to be installed by the Wind Power Producer in order for the Wind Power Producer to operate in parallel with the grid. Thereafter,

any change in such specifications shall be subject to mutual agreement of the parties.

4.12 The Project shall be operated and maintained in accordance with good and generally accepted utility standards with respect to synchronizing, voltage, frequency and reactive power control.

4.13 Voltage regulation shall be such as to enable continued paralleling and synchronization with the network voltage at the point of interconnection.

4.14 The equipment of the Wind Power Producer shall be designed for fluctuations in the frequency within limits of -5% and +3% of the standard frequency of 50 cycles per second.

4.15 The Wind power developer shall ensure that the power factor of the power delivered to the DISCOM is maintained as per the APERC/CEA/CERC norms from the time to time.

CHIEF GENERAL MANAGER
P & MM & IPC
APSPDCL :: TIRUPATI.

4.16 Any change in rupturing capacity of switch-gear, settings of the relays, etc., shall be subject to approval of the DISCOM.

4.17 As the Project's generator may carry fault currents that may occur on the grid, the Wind Power Producer shall provide adequate generator and switchgear protection against such faults. The DISCOM is not responsible for damage, if any, caused to the Project's generator and allied equipment during parallel operation of the generator with the grid.

4.18 The Wind Power Producer shall make a good faith effort to operate the Project in such a manner as to avoid fluctuations and disturbances to the APTRANSCO's / DISCOM's network due to parallel operation with the network.

4.19 The Wind Power Producer shall control and operate the Project as per Prudent Utility Practices. The DISCOM shall only be entitled to request the Wind Power Producer to reduce electric power and energy deliveries from the Project during a System Emergency, and then only to the extent that in the DISCOM's reasonable judgment such a reduction will alleviate the emergency. The DISCOM shall give the Wind Power Producer as much advance notice of such a reduction as is practicable under the circumstances and shall use all reasonable efforts to remedy the circumstance causing the reduction as soon as possible. Any reduction required of the Wind Power Producer hereunder shall be implemented in a manner consistent with safe operating procedures.

CHIEF GENERAL MANAGER
P & MM & IPC
APSPDCL :: TIRUPATI

ARTICLE 5

BILLING AND PAYMENT

5.1 For Delivered Energy purchased, Wind Power Producer shall furnish a bill to the DISCOM calculated at the rate provided for in Article 2.2, in such form as may be mutually agreed between the DISCOM and the Wind Power Producer, for the billing month on or before the 5th working day following the Meter Reading Date.

5.2 For payment of bills of the generating company through letter of credit, a rebate of 2 % shall be allowed.

Where payments are made other than through letter of credit within a period of one month of presentation of bills by the generating company, a rebate of 1% shall be allowed.

Any payment made beyond the due date of payment, DISCOM shall pay interest at existing SBI base rates plus one percent and in case this rate is reduced, such reduced rate is applicable from the date of reduction.

5.3 The DISCOM shall pay the bill on monthly basis as per Article 5.1.

5.4 **Letter of Credit:** Not later than 30 days prior to the Scheduled COD of the Generating Unit, DISCOM shall cause to be in effect an irrevocable revolving Letter of Credit issued in favor of Wind Power Developer for a minimum period of one year by a Scheduled Bank (the "Letter of Credit").

a. However Letter of Credit shall not be invoked for any disputed bill amount.

5.5 **Direct Payment:** Wind developer shall submit bills for the energy delivered during the billing period as per the provision of this PPA and there upon DISCOMs shall make payment for the eligible bill amount by the due date of payment.

5.6 **Billing disputes:** The DISCOM shall pay the bills of Wind Power Producer promptly subject to the clauses 5.1 and 5.2 above.

The DISCOM shall notify Wind Power Producer in respect of any disallowed amount on account of any dispute as to all or any portion of the bill. Wind Power Producer shall immediately take up issue with all relevant information with DISCOM which shall be rectified by the DISCOM, if found satisfactory. Otherwise notify its (DISCOM's) rejection of the disputed claim within reasonable time with reasons therefor. The dispute may also be decided by mutual agreement. If the resolution of any dispute requires the DISCOM to reimburse Wind Power Producer, the amount to be reimbursed shall bear interest at SBI base rates plus one

CHIEF GENERAL MANAGER
P & MM & IPC
APSPDCL :: TIRUPATI

percent and in case this rate is reduced, such reduced rate is applicable from the date of reduction from the date of disallowance to the date of reimbursement.

5.7 All payments by the DISCOM to Wind Power Producer hereunder shall be made to such address as may be designated by Wind Power Producer to the DISCOM in writing from time to time.

Address

Telephone :
Fax :
Mobile No. :
Email id :

CHIEF GENERAL MANAGER
P & MM & IPC
APSPDCL :: TIRUPATI

ARTICLE 6

UNDERTAKING

6.1 The Wind Power Producer shall be responsible:

(i) For proper maintenance of the project in accordance with established prudent utility practices.

(ii) For operation, maintenance, overhaul of the plant, equipment, works, switch yard and transmission lines and equipment up to the Interconnection Point of the project in close coordination with the DISCOM.

(iii) The Wind Power Producer shall furnish the generation and maintenance schedules every year.

(iv) For making all payments on account of any taxes, cess, duties or levies imposed by any Government or competent statutory authority on the land, equipment, material or works of the project or on the energy generated or consumed by the project or the Wind Power Producer or on the income or assets of the Wind Power Producer.

(v) For obtaining necessary approvals, permits or licences for operation of the project and sale of energy to DISCOM there from under the provision of the relevant laws.

(vi) The Wind Power Producer have to comply with the provisions of the AP Code of Technical Interface (Grid Code).

(vii) For achieving Commercial Operation Date within two years from the date of signing of the Agreement.

(viii) For seeking approval of APTRANSCO and DISCOM in respect of Interconnection Facilities and synchronization of the Project with grid.

(ix) The Wind Power Producer shall not dismantle and take away project machinery and interconnection facilities during the PPA term.

(x) After 25th year of the operation from Commercial Operation Date, if plant continues to operate, the DISCOM shall have the first right of refusal on power purchase from the Wind power plant. The tariff beyond 25th year shall be as mutually agreed by both the parties, subject to approval of APERC.

CHIEF GENERAL MANAGER
P & MM & IPC
APSPDCL :: TIRUPATI

(xi) **Sharing of Clean Development Mechanism (CDM) benefits:**

The Proceeds of carbon credit from approved CDM Project shall be shared between generating company and concerned beneficiaries in the following manner namely.

(a) 100% of the gross proceeds on account of CDM benefits is to be retained by the project developer in the first year after the date of commercial operation of the generating station.

(b) In the second year, the share of the beneficiaries shall be 10 % which shall be progressively increased by 10% every year till it reaches 50%, where after the proceeds shall be shared in equal proportion, by the generating company and the beneficiaries.

6.2 The DISCOM agrees:

(i) To make all reasonable efforts for making arrangements for evacuation of power from the project to be completed prior to the Commercial Operation Date of the Project subject to Article 3.

(ii) For purchase of Delivered Energy from the project as per section 2.2.

(iii) To co-ordinate with APTRANSCO and assist the Wind Power Producer in obtaining approval for the interconnection facilities where the interconnection is at 132 kV or above voltages, for synchronization, Commercial Operation, regular operation etc., as required by the Wind Power Producer.

CHIEF GENERAL MANAGER
P & MM & IPC
APSPDCL :: TIRUPATI

ARTICLE 7

DURATION OF AGREEMENT

This Agreement shall be effective upon its execution and delivery thereof between parties hereto and shall continue in force from the Commercial Operation Date (COD) and until the twenty fifth (25th) anniversary that is for a period of twenty five years from the Commercial Operation Date (COD). This Agreement may be renewed for such further period of time and on such terms and conditions as may be mutually agreed upon by the parties, 90 days prior to the expiry of the said period of twenty five years, subject to the consent of the APERC. Any and all incentives/conditions envisaged in the Articles of this Agreement are subject to modification from time to time as per the directions of APERC.

CHIEF GENERAL MANAGER
P & MM & IPC
APSPDCL :: TIRUPATI

ARTICLE 8

NOTICES

8.1 Except as otherwise expressly provided in this Agreement, all notices or other communications which are required or permitted hereunder shall be in writing and sufficient if delivered personally or sent by registered or certified mail, email or fax addressed as follows:

If to the Wind Power Producer:

Attention

Telephone :
Fax :
Mobile No. :
Email id :

If to the DISCOM:

Attention : Chief General Manager, (IPC & P&MM)
APSPDCL,
19-13-65-A, Corporate Office ,
Ragavendra Nagar , Kesavayana Gunta,
Tiruchanoor Road, Tirupati – AP, India - 517501
Fax No. : 0877-2237407
Telephone No. : 0877-2237407
Email id : gmipcspdcl@gmail.com

8.2 All notices or communications given by email, fax shall be confirmed by depositing a copy of the same in the post office in an envelope properly addressed to the appropriate party for delivery by registered or certified mail. All notices shall be deemed delivered upon receipt, including notices given by email, fax regardless of the date the confirmation of such notice is received.

8.3 Any party may by written notice change the address and/or addresses to which such notices and communications to it are to be delivered or mailed.

CHIEF GENERAL MANAGER
P & MM & IPC
APSPDCL :: TIRUPATI

ARTICLE 9

DEFAULT

9.1 The Wind Power Producer shall achieve Commercial Operation Date within two years from the date of signing of the Agreement, default of which, the Agreement is liable for termination and the same can be done at the option of DISCOM with due notice.

9.2 In the event, DISCOM commits a breach of any of the terms of this Agreement, the Wind Power Producer shall be entitled to specific performance of this Agreement or claim such damages as would be available under Law or both, at its option, by giving 30 days notice to DISCOM.

9.3 In the event, Wind Power Producer commits a breach of any of the terms of this Agreement, the DISCOM shall be entitled to specific performance of this Agreement or claim such damages as would be available under Law or both, at its option, by giving 30 days notice to Wind Power Producer.

9.4 If the default continues for a period of 30 days or more, either party will have a right to issue a preliminary notice for termination of this Agreement. If the default is not cured within 30 days thereafter, either party can terminate this Agreement and can claim damages at its option.

9.5 In the event of cancellation of the Project allotted to the Wind Power Producer by NREDCAP for any reason, the PPA with DISCOM will automatically get cancelled.

CHIEF GENERAL MANAGER
P & MM & IPC
APSPDCL :: TIRUPATI

ARTICLE 10

DISPUTE RESOLUTION

10.1 Each Party shall designate in writing to the other party a representative who shall be authorized to resolve any dispute arising under this Agreement in an equitable manner.

10.2. Following notice by one Party to the other setting out the particulars of the dispute, if the designated representatives are unable to resolve a dispute under this Agreement within 15 days, such dispute shall be referred by such representatives to a senior officer designated by the Wind Power Producer and a senior officer designated by the DISCOM, respectively, who shall attempt to resolve the dispute within a further period of 15 days.

10.3. The Parties hereto agree to use their best efforts to attempt to resolve all disputes arising hereunder promptly, equitably and in good faith and further agree to provide each other with reasonable access during normal business hours to any and all non-privileged records, information and data pertaining to any such dispute.

10.4 Failing resolution of the dispute in terms of the above provisions or even otherwise, any party may approach the AP Electricity Regulatory Commission to adjudicate upon the dispute in terms of Section 86 (1) (f) of Electricity Act, 2003.

CHIEF GENERAL MANAGER
P & MM & IPC
APSPDCL :: TIRUPATI

ARTICLE 11

SPECIAL PROVISIONS

11.1 The waiver of any breach or failure to enforce any of the terms, covenants or conditions of this Agreement shall not in any way affect, limit, modify or waive the future enforcement of such terms, covenants or conditions.

11.2 No oral or written modification of this Agreement either before or after its execution shall be of any force or effect unless such modification is in writing and signed by the duly authorized representatives of the Wind Power Producer and the DISCOM, subject to the condition that any further modification of the Agreement shall be done only with the prior approval of Andhra Pradesh Electricity Regulatory Commission. However, the amendments to the Agreement as per the respective orders of APERC from time to time shall be carried out.

11.3 However, in respect of power evacuation, the voltage levels for interfacing with grid will be as per Article 1.20. The cost of interconnection facilities has to be borne by the Wind Power Producer as per Article 3.

11.4 The invalidity or unenforceability for any reason of any provision of this Agreement shall not prejudice or affect the validity or enforceability of any other provision of this Agreement.

11.5 The failure of any party to insist in one or more instances upon the strict performance of any of the provisions of this Agreement or to take advantage of any of its rights hereunder shall not be construed as a waiver of any such provisions or relinquishment of any such rights but the same shall continue in full force and effect.

11.6 Unless the context otherwise requires, every arrangement, procedure or any other matter which is, under any of the provisions of this Agreement, required to be mutually agreed upon between the parties, shall be concluded by a written Agreement between the parties not later than the date specified in the concerned clause of this Agreement, subject to the consent of the APERC.

11.7 This Agreement, including Schedule 1, 2 & 3 attached hereto, constitute the entire agreement between the parties with respect to the subject matter hereof, and there are no oral or written understandings, representations or commitments of any kind, express or implied, not set forth herein.

11.8 The headings contained herein are included solely for the convenience of the parties and are not to be used as a basis for interpreting the various sections of this Agreement.

CHIEF GENERAL MANAGER
P & MM & IPC
APSPDCL :: TIRUPATI

11.9 The parties each agree to act in good faith in implementing the terms and conditions of this Agreement and in carrying out their respective obligations hereunder.

11.10 In the event of the merger or re-organization of DISCOM, if the resulting entity is able to perform DISCOM's obligations hereunder in no less a manner than DISCOM, the resulting entity shall take the right and responsibility for performance of DISCOM's obligations.

11.11 In the event of the merger or re-organization of Wind Power Producer if the resulting entity is able to perform Wind Power Producer's obligations hereunder in no less a manner than Wind Power Producer, the resulting entity shall take the right and responsibility for performance of Wind Power Producer's obligations.

11.12 **Assignment and Financing:** Neither party shall assign this Agreement or any portion thereof to any third party without the prior written consent of the other party which consent shall not be unreasonably withheld.

CHIEF GENERAL MANAGER
P & MM & IPC
APSPDCL :: TIRUPATI

IN WITNESS WHEREOF, the Wind Power Producer and the DISCOM have caused this Agreement to be executed as of the date and the year first set forth above.

For and behalf of

SOUTHERN POWER DISTRIBUTION COMPANY OF ANDHRA PRADESH LIMITED

CHIEF GENERAL MANAGER
P & MM & IPC
APSPDCL :: TIRUPATI

WITNESS

1. **By:**

2. **Its:**

For and behalf of

M/S.

WITNESS

1. **By:**

2. **Its:**

SCHEDULE 1
Particulars of the Project
(Referred to in the Preamble to the Agreement)

Name of the Project	Location	No. of Wind Energy Converters	Capacity of the project in MW	Power export to the grid in MW*
	Tallaricheruvu (V) Tadipatri Mandal, Anantapuram District Location Nos. Survey No. 1 - 721/1,720/3 2. - 721/3,722/1 3. - 723,723/3 4. - 724/1, 720/1 5. - 724/3,724/5 6. - 1328, 1329 7. - 1327 8. - 1574	8 Nos (2MW Each)	16	15.92

* Out of 16 MW, 0.08 MW is for Auxiliary Consumption and 15.92 MW is for export to grid for sale to DISCOM.

CHIEF GENERAL MANAGER
P & MM & IPC
APSPDCL :: TIRUPATI

SCHEDULE – II

(Copy of sanction proceedings from NREDCAP to the Company)

SCHEDULE – III

(Copy of agreement entered into by the Company with NREDCAP)

SCHEDULE – IV

Annexure – I to the Commission's order dated 30-03-2010 in O.P.No. 40 of 2010 and Commission's order dated 11-07-2012 in O.P.No.7 of 2012 and letter dated 04-06-2014 & Regulation No. 1 of 2015 and as per APERC Order dated 26.03.2016 in O.P. No.13 of 2016

CHIEF GENERAL MANAGER
P & MM & IPC
APSPDCL :: TIRUPATI

File no. PFS/

September 29, 2015

Subject: Loan No. DZ0106001: M/s : Long Term Loan of Rs. 83.00 Crores for setting up 16 MW (8 X 2MW) Wind power project in district Ananthapur, Andhra Pradesh: Sanction letter with Terms and Conditions (T&C)

Ref : Your request letter no. Nil dated Feb 15, 2015

Dear Sir,

This has reference to your request vide letter cited above for a term loan for the subject mentioned project and further discussions held with you and your representatives from time to time.

Your request has been considered and we are pleased to inform you that out of the total Project completion cost of **Rs 120.65 Crores (Rupees One Hundred Twenty Crores and Sixty Five Lakhs Only)** of the subject Project, we are generally agreeable to sanction **term loan of up to Rs 83.00 Crores (Rupees Eightee Three Crores only) (Loan No. DZ0106001).**

The aforesaid loan assistance is subject to the Terms and Conditions (T&C) as set out in the enclosed Annexure - I.

In case the above terms and conditions are acceptable to you, please send a copy of this Sanction Letter along with T&C, duly signed and stamped by an authorized officer of your company as token of acceptance of the debt assistance within 30 (thirty) days from the date of this Sanction Letter.

We believe your interaction with PFS has been satisfactory, adding value to the Project and the company. We welcome your views and suggestions for making our services better.

We look forward for a strong and continuing relationship by partnering in your future endeavors.

Thanking You

Yours faithfully,
For and behalf of PTC **India Financial Services Ltd.**

V. S. Bisht
Ex. Vice President

Sitesh Sinha
Vice President

Annexure IV

SOUTHERN POWER DISTRIBUTION COMPANY OF AP LIMITED
Meters&Protection Division,Kurnool

From
Divisional Engineer,
M & P Division,
APSPDCL, Kurnool.

To
The Superintending Engineer,
Operation,
APSPDCL, Kurnool.

Lr.No. DE/M&P/KNL/AE/Tech/F.No. /D.No. 182A/16, Dt: 29-08-2016.

Sir,

Sub:- APSPDCL-M&P Division-Kurnool-Wind Power plant commissioning certificate regarding synchronization of 16MW(8x2MW) wind Power project of M/S. at Talaricheruvu(V),Tadipathri(M) of Operation Division, Nandyal in Kurnool(dist)-Submitted-Regarding.

******

The wind Power plant commissioning certificate regarding synchronization of 16MW(8x2MW) wind Power project of M/S. at Talaricheruvu(V),Tadipathri(M) of Operation Division, Nandyal in Kurnool(dist)) is here with submitted.

This is submitted for favour of information and further necessary action please.

o/c

Encl:- 1.Commissioning Certificate

Divisional Engineer

M&P Division,Kurnool

Copy to:

The Divisional Engineer/Operation/Nandyal.

The ADE/HT Meters-2/Kurnool.

WIND POWER PLANT COMISSIONING CERTIFICATE

This is to certify that the total 16.0 MW wind power plant of M/S. _____, at Tallaricheruvu village, Tadipathri(Mdl) of Anatapur District is synchronized to the grid in the presence of the Officials of APDISCOMs, APTRANSCO and M/S. _____ staff.

The details of capacity commissioned are given below:
CEIG Approval Ref No: Lr No:CEIG/ Tech/ HT/ ATP-225/D.No.1640/16, Dt:24/08/2016

Sl. No	Date	Inter connection point (Metering point)	Existing capacity	Now commissioned Capacity	Total
1	27.08.2016	33KV level at 132KV/33KV Sub-Station, Ankireddy palli.	16.0MW	16.0MW	16.0MW

Wind Turbines Details:					
Sl.No	Date	Inter connection point (Metering point)	No.of Turbines	Capacity of each Turbine	Cumulative total Capacity
1	27.08.2016	132KV/33KV SS, Ankireddy palli	8 Nos	2.0MW	16.0MW
TOTAL AC Capacity for Synchronization					16.0MW

The details of the plant and substation are given below:
Plant Address: Talaricheruvu (Village), Tadipathri (Mandal), Anantapur (Dt)
EHT/Discom Substation Details: 132KV/33 KV SS Ankireddy palli. Kurnool (District)

Feeders Details: 33KV Single Circuit Line of length 2.50KM with AAAC 100 sqmm Conductor and 10.0Km 33KV Single circuit line with AAAC 150 sqmm Conductor

Meters Provided at Interconnection Point i.e.,substation: 33KV level at 132KV/33KV SS Ankireddy palli. Kurnool (Dist)

Sl.No	Meter	Make	Serial No.	Class	Date of installation	MF
1	Main Meter	SECURE	APX01061	0.2S	24.08.2016	1000
2	Check Meter	SECURE	APX01062	0.2S	24.08.2016	1000
3	Standby	SECURE	APX01063	0.2S	24.08.2016	1000

PT CTdetails:

Particulars	CT PT Details for Main & check Meter		CT PT Details For Standby Meter	
	PT Details	CT Details	PT Details	CT Details
Make	M/s Vamet Industries	M/s Vamet Industries	M/s Vamet Industries	M/s Vamet Industries
R	VOF 16931	COF 161165	VOF 16928	COF 161162
Y	VOF 16932	COF 161166	VOF 16929	COF 161163
B	VOF 16933	COF 161167	VOF 16930	COF 161164
Class of accuracy	0.2	0.2S	0.2	0.2S
Burden	10 VA	5VA	10VA	5VA

Verified the CTs & PTs test reports and certified that burden of CTs and PTs is of 5VA and 10VA respectively & class of accuracy is 0.2s and 0.2s class CTs and PTs respectively and 0.2s class meters are tested at NABL accredited lab in the presence of APDISCOM, & APTRANSCO staff.

Hourly Energy meter readings (list enclosed based on the CMRI Dump Data Report):-

Sl. No	Date	Time	MainMWH readings (Manual)		CheckMWH readings (Manual)		StandbyMWH readings (Manual)		Specific Remarks
			Import	Export	Import	Export	Import	Export	
1	24.08.2016	20:47hrs	6.4	6.5	6.5	6.5	6.5	6.5	SLDC permitted for Line Charging.
2	27.08.2016	13:31hrs	6.7	45.6	6.8	45.6	6.8	45.6	SLDC permitted for COD

The generator shall ensure that the harmonics injected into the grid shall confirm to the grid Specifications as specified by APERC/CERC from time to time.

The above plant was commissioned as per APDISCOMs/APTRANSCO guidelines. The SLDC permitted on 24.08.2016 for line charging and that of synchronization of the plant is on 27.08.2016 and the performance of the plant is satisfactory.

DE/M&P/KNL 27/8/16 DE/DPE/KNL 27/8/16 DE/OP/NDL DE/O&M/NDL

EE/NEDCAP/KNL SE/OP/KNL Generator Signature

Annexure V

Energizing INDIA

CORPORATE OFFICE

Inox Towers, Plot No. 17, Sector - 16A, Noida - 201 301, Uttar Pradesh, India.
Ph: +91 120 6149600

REGIONAL OFFICE

Mumbai Office
9th Floor, Viraj Tower, Western Express Highway, Andheri (East), Mumbai - 400 093, Maharashtra.
Ph: +91 22 40626900

Ahmedabad Office
B-2, B Square Managed Offices, 7th Floor, Shree Krishna Centre, Ahmedabad - 380 009, Gujarat.
Ph: +91 79 30079059-60

Hyderabad Office
GVK One, 4th Floor, Road No.1, Banjara Hills, Hyderabad - 500 034, Andhra Pradesh.
Ph: +91 40 67496749

Chennai Office
Apeejay Business Centre, 39/2, Haddows Road, Nungambakkam, Chennai - 600 006, Tamil Nadu.
Ph: + 91 44 28302000

Jaipur Office
402, Crown Square Plaza, Gandhi Path, Vaishali Nagar, Jaipur - 302021, Rajasthan.
Ph: +91 141 5115304

enquiry@inoxwind.com • www.inoxwind.com

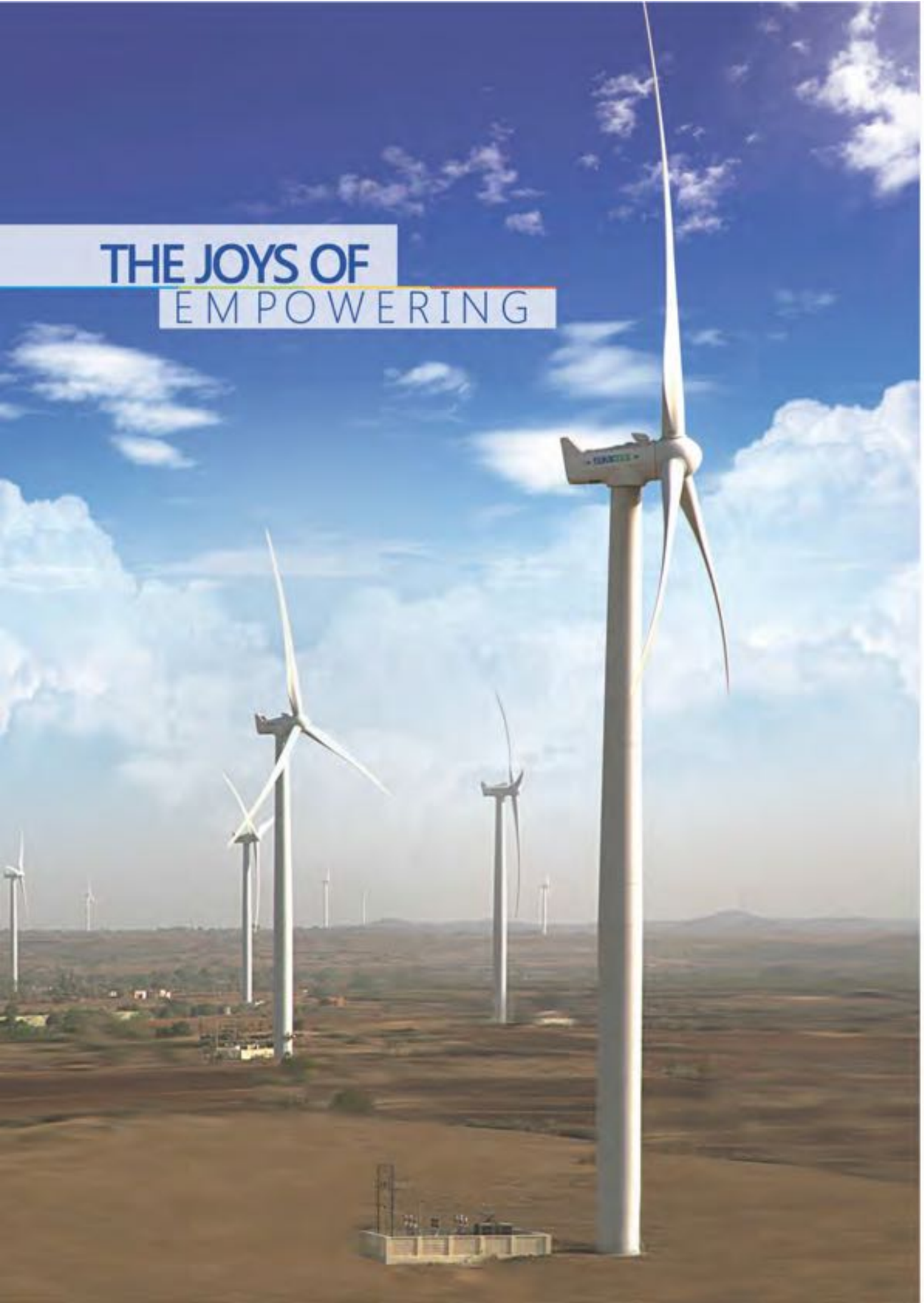

COMPANY PROFILE

Inox Wind is a fully integrated player in the wind energy market with state-of-the-art manufacturing plants near Ahmedabad (Gujarat) for Blades & Tubular Towers and at Una (Himachal Pradesh) for Hubs & Nacelles. Inox Wind manufactures the key components to ensure high quality, most advanced technology, reliability and cost competitiveness. Inox WTGs are designed for low wind speed sites of India, and generate anywhere between 6% - 18% more power viz-a-viz other WTGs model available across the nation.

A robust, energetic and experienced team comprising experts from across all relevant fields and verticals make Inox Wind a dynamic and enterprising corporate entity. Inox Wind is an ISO 9001:2008 certified company. In addition, manufacturing units are awarded with ISO 14001:2004, OHSAS 18001:2007 and ISO 3834-2 (tower manufacturing facility). Inox Wind turbines are type certified by TUV SUD according to "The Guidelines for the Certification of Wind Turbines issued by Germanischer Lloyd" and are duly enlisted in RLMM by C-WET.

THE INOX GROUP

The Inox Group is a $2 billion, professionally managed business group with diverse business interests including Industrial Gases, Engineering Plastics, Refrigerants, Chemicals, Carbon Credits, Cryogenic Engineering, Renewable Energy and Entertainment. The Inox Group includes two listed companies (Gujarat Fluorochemicals Limited & Inox Leisure Limited) and a Joint Venture with a global giant (Air Products & Chemicals Inc). The Group employs over 9000 people at its 200+ business units across the country. The Group's distribution network spans over 50 countries around the globe and it exports to more than 75 countries. In the next few years, the Group plans to build, own & operate about 1000 MW of wind power projects.

THE JOYS OF BENEFITTING

KEY REASONS FOR YOUR SUCCESS WITH INOX WIND

Group Fundamentals

- Inox is a leader across diverse businesses
- Excellent rating and reputation in existing businesses
- Strong financials and profitability
- Proven track record of Promoters

Selection of Turbine

- ·Latest technology best suited for Indian climatic conditions
- More than 15 GW running globally on similar technology
- Extremely competitive capital and operational cost
- Major components sourced from reputed global suppliers

Project Capability & Wind Resource Assessment

- ·Clear land title and land bank
- Strong infrastructure development capability
- Power evacuation readiness prior to commissioning of turbines
- Highly reliable wind resource assessment.

Sales & Service Support

- Highly dedicated and responsive CRM team
- Transparent sharing of performance data
- Experienced, efficient and dedicated O&M team for designed life
- Up to date and in-depth knowledge of regulatory and policy framework

THE JOYS OF SOARING

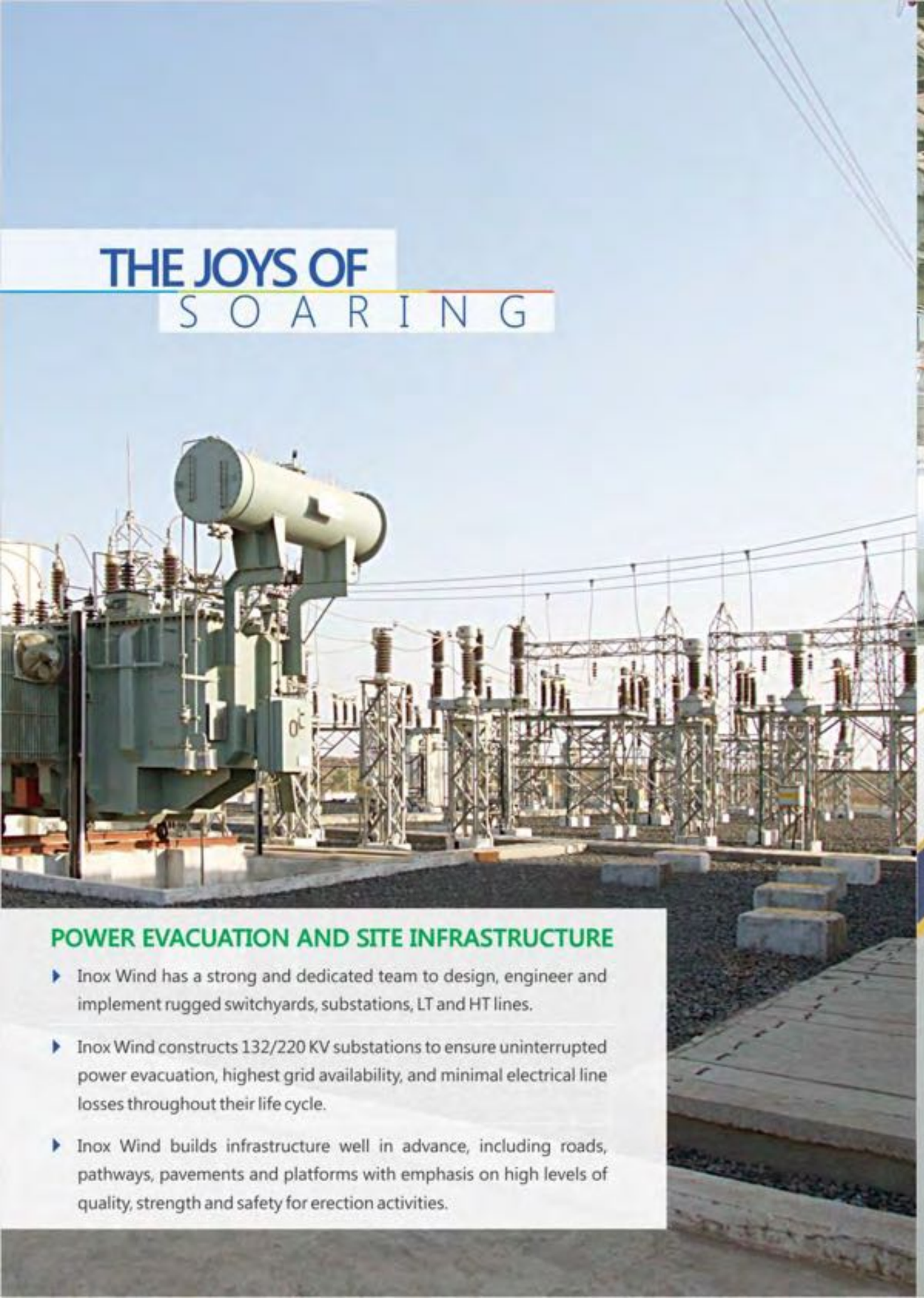

POWER EVACUATION AND SITE INFRASTRUCTURE

- Inox Wind has a strong and dedicated team to design, engineer and implement rugged switchyards, substations, LT and HT lines.
- Inox Wind constructs 132/220 KV substations to ensure uninterrupted power evacuation, highest grid availability, and minimal electrical line losses throughout their life cycle.
- Inox Wind builds infrastructure well in advance, including roads, pathways, pavements and platforms with emphasis on high levels of quality, strength and safety for erection activities.

CUSTOMER'S PERSPECTIVE

- The Inox Group is putting up its own wind farms across various locations at which WTGs will be installed for customers/investors as well.
- This will re-ensure highly reliable wind resource assessment, robust infrastructure development and efficient and full life cycle O&M.

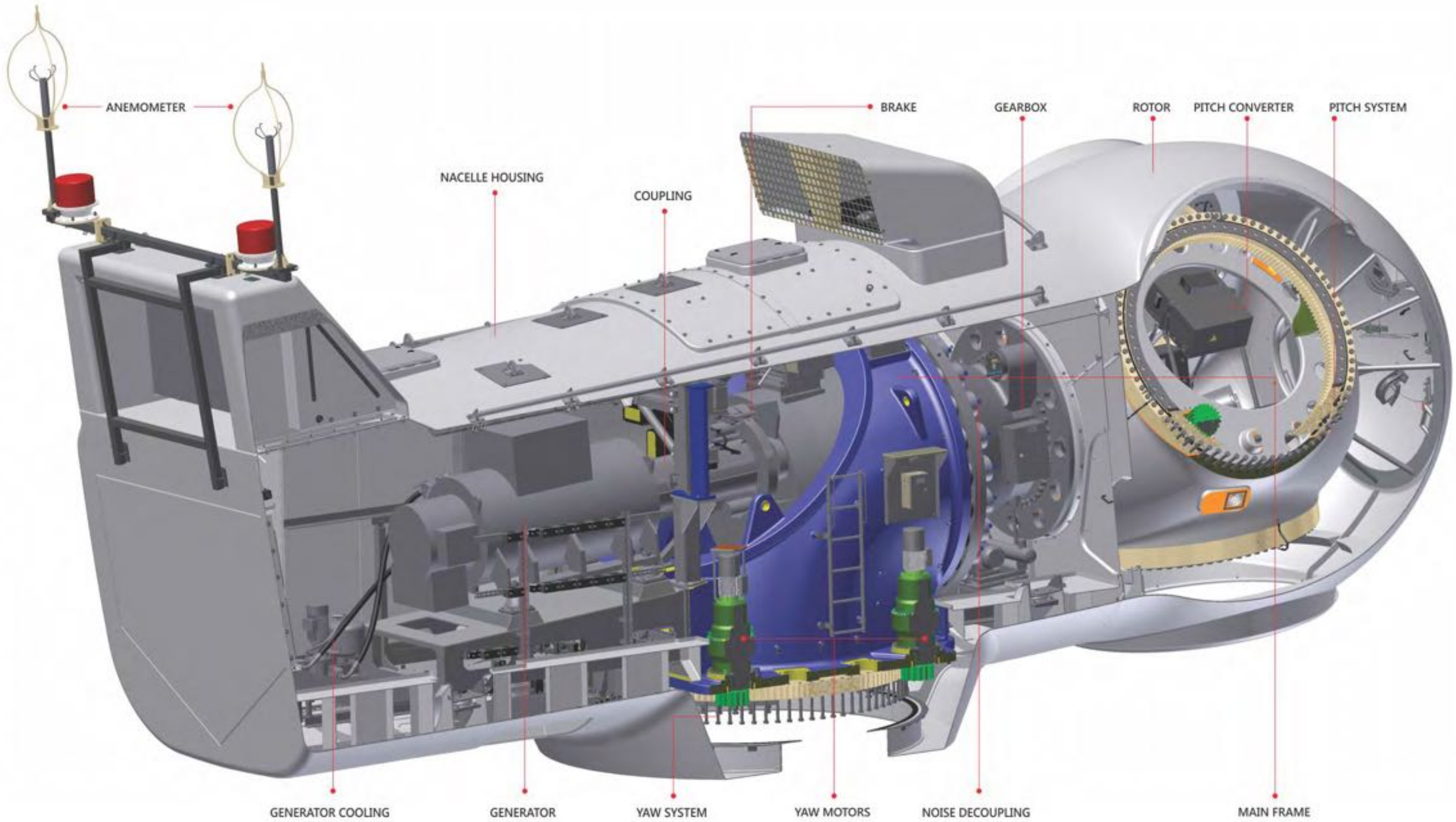
ANEMOMETER
NACELLE HOUSING
COUPLING
BRAKE
GEARBOX
ROTOR
PITCH CONVERTER
PITCH SYSTEM
GENERATOR COOLING
GENERATOR
YAW SYSTEM
YAW MOTORS
NOISE DECOUPLING
MAIN FRAME

THE JOYS OF ENHANCING

TURBINE ADVANTAGES AT A GLANCE

- Double Fed Induction Generator (DFIG) – increased power output & reduced reactive losses.
- Superior power curves - one of the lowest cut-in wind speeds and rated wind speeds resulting in higher power generation for low wind regime sites of India.
- Patented integral drive train incorporating rotor shaft and gearbox as a single unit with less turbine weight and less moving parts, resulting in ease of O & M.
- One of the largest rotor diameters in its class – resulting in higher swept area and consequently higher power output.
- Advanced electronic control systems resulting in higher machine uptime.
- Hub height of 80/92 meters – to capture better wind speeds.
- Technological enhancements such as using capacitors instead of battery banks which increases machine up time.
- All electrical components are sourced from reputed global suppliers to ensure high efficiency and reliability of turbines.

THE JOYS OF EXCELLING

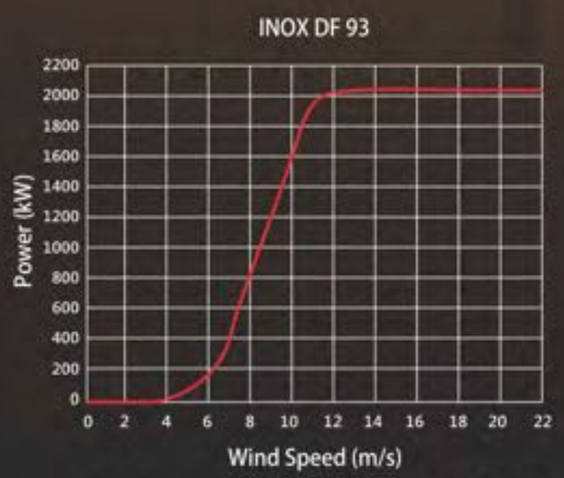

Cut in Speed - 3.0m/s Rated Speed - 11.5m/s

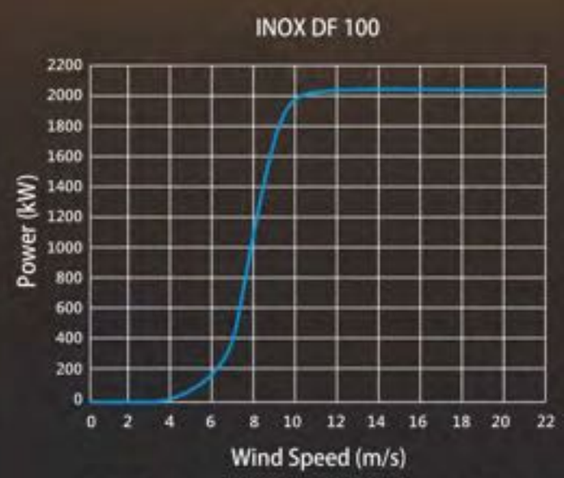

Cut in Speed - 3.0m/s Rated Speed - 11.0m/s

TECHNICAL DATA

WTG Model	INOX DF 93	INOX DF 100
OPERATING DATA		
Rated power	2000kW	2000kW
Cut-in-wind speed	3.0m/s	3.0m/s
Rated wind speed	11.5m/s	11.0m/s
Cut-out wind speed	20.0m/s	20.0m/s
Survival wind speed	52.5m/sec	52.5m/sec
Hub height	80 meter	80 / 92 meter
Type class	TC IIIB	TC IIIB
Rated speed	15.9 rpm	15.7 rpm
Operational mode	Variable speed	Variable speed
Design standards	Germanischer Lloyd	Germanischer Lloyd
ROTOR		
Pitch system	Pitch control - electrical, variable speed inverters, power backup with ultra capacitors	
Diameter	93 meter	100 meter
Swept area	6795 sq meter	7894 sq meter
Blade material type	Epoxy glass fibre	Epoxy glass fibre
GENERATOR		
Type	Double fed induction generator	
Rated power	2000kW	2000kW
Rated voltage	690 V AC, 3 Phase	690 V AC, 3 Phase
Frequency	50 Hz	50 Hz
Cooling system	Water cooled	Water cooled
Insulation	Class H	Class H
BRAKING SYSTEM		
Aerodynamic brake	Full span independent blade pitching	
Mechanical brake	Disc brakes	Disc brakes
DRIVE TRAIN		
Drive train	Patented integral drive train with rotor shaft and drive train as single unit	
Type of gearing	Two planetary and one parallel shaft gear	
Rated drive torque	1380 kNm	1355 kNm
Transmission ratio	1:~114.65 ±1%	1:~114.65 ±1%
Gear lubrication	Forced lubrication	Forced lubrication
Connect on gear/generator	Flexible coupling	Flexible coupling
YAW SYSTEM		
Type	Driven by 4 gear motors	Driven by 4 gear motors
Bearings	Slide bearing	Roller bearing
TOWER		
Type	Conical tubular steel tower	
Tower height	78 meter	78/90 meter
Corrosion protection	Protective paint	Protective paint

TECHNOLOGY PARTNER

The Inox Wind 2 MW turbine is designed by AMSC, Austria a wholly owned subsidiary of USA based American Super Conductor Corporation (AMSC), a leading energy technology company and a global leader in alternative energy solutions.

More than 9000 Turbines (15 GW) based on AMSC technology are successfully operating across the globe.

AMSC has more than 14 licensees across the globe and has designed turbines from 600 KW to 10 MW. Some of their licensees were amongst the top 10 wind turbine suppliers/manufacturers globally.

WIND RESOURCE ASSESSMENT

Inox Wind has carried out mesoscale mapping pan India to identify potential sites suitable for wind farms.

Inox Wind has installed wind masts across windy states in India for continuous wind data monitoring.

Based on detailed wind resource assessment, a significant land bank has been acquired.

Besides in-house wind resource assessment, generation estimates and wind data analysis are also duly verified by world renowned wind assessment consultants.

इरेडा IREDA
भारतीय अक्षय ऊर्जा विकास संस्था सीमित
Indian Renewable Energy Development Agency Limited
(भारत सरकार का प्रतिष्ठान / A Government of India Enterprise)
(A Mini Ratna Category-I PSU)
ISO/ISO 9001 : 2008 Certified
ISO/IEC : 27001 : 2013 Certified
कार्पोरेट कार्यालय : तीसरा तल, अगस्त क्रांति भवन, भीकाएजी कामा प्लेस, नई दिल्ली-110 066
Corporate Office : 3rd Floor, August Kranti Bhawan, Bhikaiji Cama Place, New Delhi - 110 066
दूरभाष/Tel.: 011-26717400-12, फैक्स/Fax : 91-11-26717416, ई-मेल/E-mail : cmd@ireda.gov.in, वेबसाईट/Website : www.ireda.gov.in
CIN : U40108DL1987GOI027265

221/3432/WE/2017/IREDA 4703 **Dated: 24.11.2017**

M/s.

Subject: Sanction of a Main Loan of Rs. 8,300.00 Lakhs to M/s. , for their 16.00 MW (8 nos. of 2 MW each Inox DF93 WEGs) Wind Farm project set up at Talaricheruvu Village, District Anantapur of Andhra Pradesh (Project No 2336)

Dear Sir,

Please refer to your loan application and subsequent correspondence & discussions, your representative(s) had with us, regarding term loan towards the 16.00 MW (8 nos. of 2 MW each Inox DF93 WEGs) Wind Farm project set up at Talaricheruvu Village, District Anantapur of Andhra Pradesh (Project No 2336)

1. The application has been considered and Indian Renewable Energy Development Agency Ltd (IREDA) is agreeable to provide to your Organization, as Borrower, Term Loan of Rs. 8,300.00 Lakhs (Eighty Three Crores Only) or actual amount towards balance takeover of existing loan sanctioned by M/s PTC India Financial Services Limited plus prepayment premium, if any payable to M/s PTC India Financial Services Limited.

2. The sanctioned loan is subject to following:

   - Terms and conditions as detailed in Annexure-I.
   - Formalities to be complied with for execution of loan documents as detailed in Annexure-II.
   - The steps / formalities required to be complied with and / or documents required to be submitted for the securities stipulated as detailed in Annexure-III.
   - Terms and Conditions governing release of first installment of loan as detailed in Annexure-IV.

3. Please note that this communication should not in any way be construed as giving rise to any binding obligation on the part of IREDA, unless the borrower communicates to IREDA, within 30 days from the date of receipt of this letter that the terms and conditions set out herein are acceptable and unless the Loan Agreement and other documents relating to the above loan are executed by the borrower within the prescribed period, the loan sanction shall be considered withdrawn automatically without any further reference and obligation on the part of IREDA.

4. The execution of Loan Agreement and other documents is scheduled for 26.12.2017. In case you wish to sign the documents earlier, you are welcome to do so with prior intimation. This is, however, subject to submission of documents, as detailed in the letter.

5. Sh. Khekiho Yeptho is Nodal Officer for your Project.

6. All the annexures are deemed to be part of this letter.

Thanking You

Yours faithfully

FOR INDIAN RENEWABLE ENERGY DEVELOPMENT AGENCY LIMITED

Khekiho Yeptho

Deputy General Manager

8MW Wind Power Project (Shovel Ready)
Permissions

ఆంధ్రప్రదేశ్ నూతన మరియు పునరుద్ధరణీయ ఇంధన వనరుల అభివృద్ధి సంస్థ లి.
New & Renewable Energy Development Corporation of Andhra Pradesh Ltd.
(A State Government Company)
(Formerly Non-Conventional Energy Development Corporation of Andhra Pradesh Ltd.)
Regd. Office :# 5-8-207/2, Pisgah Complex, Nampally, Hyderabad - 500 001. India.
Tel : Off : 040-23202391, 23202262, 23203376 Fax : 040-2320 1666
E-mail : info@nedcap.gov.in, nedcap@ap.nic.in Website : www.nedcap.gov.in
NREDCAP

Ref: NREDCAP/ Dt.23.10.2016

PROCEEDINGS

Sub:-Wind Power Project in private sector – 12MW Wind farm allotment at Talaricheruvu, Ananthapuramu district – Reg

Ref:-1. Application for allotment of wind farm dt. 29.06.2016
2. G.O. Ms.No.9, Dt. 13.02.2015 of Energy I &I (PR.II) Dept, GOAP
3. Minutes of NREDCAP's Board Meeting of 239th held on 28.05.2015
4. T.O. Lr. No. NREDCAP/WE/ , dated 18.07.2016
5. Lr.No. Nil, Dt.14.10.2016 of M/s & Board resolution
6. Lr.No. Nil, Dt.14.10.2016 of M/s & Board resolution

&&&

In the reference 1st cited, M/s , have applied to NREDCAP for allotment of 12 MW capacity wind power project at Talaricheruvu, Ananthapuramu district, for generation of electric power on commercial basis.

In the reference 5th cited, M/s has requested to permit them to execute 12 MW capacity wind power project through their SPV company of M/s . The request of M/s for execution of the project through their SPV company ie M/s is considered..

Based on orders of the Govt. and the resolution of the Board of NREDCAP 12 MW capacity wind power project is sanctioned to M/s , to set up at Talaricheruvu, Ananthapuramu district for generation of power on commercial basis subject to the following conditions:

1. The allotment of the land and lease of the land shall be subject to GO. Ms. No. 406, dated 09.12.2014 of Revenue (Assignment.V) Dept., GOAP issued in this regard.

2. The wind power project shall be established in the specified area as indicated in the proposal.

4. In case of private lands, the company shall make its own arrangements for procurement of land, subject to approval of the area of operation by NREDCAP.

5. The Company shall install wind turbines, so as not to affect the performance of the other wind turbines and maintain safety standards in consultation with NREDCAP.

6. The company may explore the possibility of installing higher capacity Wind Electric Generators to achieve higher plant load factor.

7. The company shall install the Wind Electric Generators under the project, which are having the approval of National Institute of Wind Energy (Formerly C-WET)

8. No second hand or used wind turbines, imported from abroad or procured locally shall be installed.

9. If there is any change in the proposal submitted along-with the application, the same shall be brought `to the notice of NREDCAP and approval shall be obtained for such changes.

10. The wind farm developer should ensure that the wind mill generate grid quality power with power factor not less than 0.85 and should draw minimum reactive power

11. The company can sell the projects/ sub-projects to promoters with prior approval of NREDCAP/ Government of Andhra Pradesh, duly complying with the payment of fee and other requirements if any.

12. The Company shall abide by the regulations of the Andhra Pradesh Electricity Regulatory Commission (APERC). The proceedings issued by APERC from time to time shall be followed.

13. The company shall enter into Power Purchase Agreement or Open access agreement or Wheeling agreement with DISCOMs as per the policy of the Govt. in this regard from time to time.

14. The company shall pay Rs.1.50 Lakhs plus service tax per Megawatt as sanction fee to NREDCAP at the time of entering into agreement.

15. The company shall obtain all clearances necessary for installation of wind electric Generators in accordance with statutory provisions, guidelines issued by the Government of India and the Government of Andhra Pradesh from time to time.

16. The company shall complete the financial closure within a period of six months from the date of signing of the Agreement or before such extensions as may be accepted and granted by the NREDCAP on request by the company on account of delays in obtaining all necessary consents, licenses, authorizations and clearances required from the Government of Andhra Pradesh and Government of India.

20. The company shall execute the work as per terms of the allotment letter and complete within 12 months from the date of achieving the financial closure. In case, the company fails to execute the work within the stipulated time, NREDCAP will recommend to Govt. for the resumption of land and the project allotment will be cancelled.

21. At the time of land allotment, the company shall give a schedule of execution of the project. The project must be commissioned within a period of two years from the date of this agreement. The company shall provide an irrevocable bank guarantee of Rs.2,00,000/- (Rupees Two lakhs only) per megawatt in case of Govt. lands and Rs.1,00,000/- (Rupees One lakh only) per MW in case of private lands, at the time of agreement, valid for a period of two years (24 months) or a demand draft drawn in favour of NREDCAP, payable at Hyderabad for an equivalent amount in lieu of Bank guarantee, at the time of agreement. The amount will be adjusted against penalties imposed, if any, due to delay in execution of the project.

22. If the company fails to complete the project as per agreed schedule, the penalties will be imposed as per the terms of the agreement and if the project is not commissioned as per the schedule, all permissions including the allotment of land would stand automatically cancelled and the bank guarantee given by the company will be encashed.

23. The company shall permit the other wind developers to use the roads and other infrastructure facilities if any on the allotted land and also provide infrastructure and other facilities for conveyance and for transmission of power necessary in that area.

21. The company shall permit the officers of the New and Renewable Energy Development Corporation of A.P. Ltd / Government of Andhra Pradesh / Government of India for inspection/verification.

22. The company shall prepare an action plan in detail for completion of wind power project allotted within a target period of 24 months and communicate the action plan for each item of work within 3 months from the date of signing of agreement. The company shall submit quarterly progress reports for each quarter ending March, June, September and December. The progress will be reviewed by NREDCAP, based on quarterly report regularly. Based on progress of works against set mile stones, NREDCAP may consider for reduction of Bank guarantee and accordingly to release the proportionate bank guarantee.

The receipt of the letter may be acknowledged.

Sd/-

V.C & MANAGING DIRECTOR

Copy to Chairman and Managing Director, APSPDCL, Tirupati.
Copy to Executive Director, Planning, RAC & Reforms, Transmission Corporation of Andhra Pradesh Ltd (AP TRANSCO), Vidyut Soudha, Hyderabad
Copy to the Chief Engineer, IPC, AP Power Coordination Committee, AP TRANSCO, Hyderabad.
Copy to the District Collector, Ananthapuramu
Copy to the District Manager, NREDCAP, Ananthapuramu

//FBO//

PROJECT DIRECTOR (WE)

TRANSMISSION CORPORATION OF ANDHRA PRADESH LIMITED

From:
Executive Director
HRD & Planning,
APTRANSCO, Vidyut Soudha,
Khairatabad, Hyderabad - 500082

To:

Lr.No.ED/HRD & Plg/DE-REE/ADE-C/AE-C/F- /D.No: 144/17, dt: 27.04.2017

Sir,

Sub: Connectivity for 12MW power from Wind Power Project to be setup Tallaricheruvu(V), Tadipatri (M), Ananthapur District by M/s. – Revised Connectivity Approval -Issued - Reg.

Ref:1) Lr.No.ED/HRD & Plg/DE-REE/ADE-C/AE-C/ /D.No:39/17, dt:12.01.2017
2) Lr.No.Nil, Dt.30.03.2017 of M/s.

* * *

Please refer to the reference (1) cited, wherein, APTRANSCO has accorded connectivity approval to 12 MW Wind Power Project proposed to be setup at Tallaricheruvu(V), Tadipatri (M), Ananthapur District by connecting to upcoming 220/132kV Sub-Station Tirumalayapalli from their pooling station at 132KV level.

M/s. , vide ref (2) cited has informed that they down sized their plant capacity from 12MW to 8MW and requested to grant them permission to evacuate the power from their 8MW wind power project through the 132/33KV Ankireddypalli SS, Kurnool Dist at 33KV level.

As per the request of M/s. , APTRANSCO has accorded approval for evacuation of power from the 8MW wind power project to be set up at Tallaricheruvu(V), Tadipatri (M), Ananthapur District by connecting to 132/33KV SS Ankireddypalli at 33KV level, duly cancelling the connectivity approval issued vide ref (1) cited, subject to the condition that ***the existing PTR capacity (2X16MVA) at Ankireddypalli SS to be augmented to the capacity-1X16+1X31.5MVA at the cost of the developer.***

For evacuation of wind generation, you are requested to lay 33KV line, subject to the following conditions.

I. The developer has to lay 33KV line from generating site and shall connect radially to 132/33KV Ankireddypalli SS. Cost of laying of lines including bay at Ankireddypalli SS is to be borne by the developer as per the regulation in vogue.

II. The land required for 33 KV Bay extensions at APTRANSCO Substations is to be procured by the developer at his own cost and the land is to be handed over to APTRANSCO.

III. The location of Interface meters is as per the OP. No.40 of 2010 APERC Guidelines on Power Evacuation from Wind projects in Andhra Pradesh, APERC Regulation No.01/2015 (Terms and conditions for Tariff determination for wind power projects and respective agreement conditions).

IV. Further, as per the clause No 4.6.2 of Indian Electricity Grid Code 2010, it is mandatory to provide data to SLDC prior to charging of the equipment. As per the clause 5.2(u) of Indian Electricity Grid Code 2010, Data Acquisition System facility shall be provided and transfer of information to concerned SLDC and RLDC for Solar/wind generators. Hence it is requested to provide the necessary Data Acquisition System along with necessary communication system to communicate with ALDC/SLDC for the proposed Wind Generation Project. Presently it should communicate to ALDC/SLDC on IEC 60870-5-101(Serial) protocol and provision to upgrade to IEC 60870-5-104 (TCP/IP) protocol as the SLDC is Scheduled to be upgraded in near future.

V. The developer is required to maintain a security in the form of Bank Guarantee (BG) of Rs 5.00 Lakhs/MW for First twelve months and Rs 10.00 Lakhs/MW there after until your generating plants are commercially made Operational. Hence it is requested to submit the Bank Guarantee (with claim period of One month after validity period) within one month from the date of receipt of this letter and obtain field feasibility report before entering in to MOU failing which the connectivity given will be cancelled without further intimation.

VI. The Wind developer has to furnish forecasting and scheduling and demand estimation by SLDC in compliance with IEGC. Necessary undertaking has to be submitted to the Chief Engineer/SLDC prior to synchronisation.

VII. The developer has to comply with Central Electricity Authority (Technical Standards for connectivity to the grid) Regulation 2007 and its subsequent amendment regulations, 2013 Part- II(B)(B2) and Part-II(B)(B1)) and the wind

machines installed at Generating site should comply with LVRT equipment. The necessary type test certificates for LVRT must be approved by NIWE (National Institute of Wind Energy) and the same will be submitted to the Chief Engineer/SLDC/APTransco before synchronization.

VIII. The developer/Generators shall submit the static data of each generators such as WTG site/Location name, GPS coordinates of the Location (Longitude & Latitude), Name of the wind farm owner/Developer, Owner Details, Hub height in m, Blade Length in m, Description of wind Generation data communication, Swept area in Sq m Type of WTG, Make, Sl.No, Model of WTG, Capacity of the Turbine, Wind sensors details of Wind Speed, Wind Direction, Temperature, humidity, Generation Voltage, MW,MVAR.

Further, you are requested to submit an undertaking on Rs100/- Non Judicial Bond paper for accepting the above terms and conditions.

Further, you are requested to submit your consent to take up the work by APSPDCL duly paying the cost of estimate OR on turnkey basis duly paying the supervision charges, Engineering Charges, Service tax and cost of spares to APSPDCL for 33KV Bay and line.

It is requested to submit the consent letter to the Superintending Engineer/Operation/APSPDCL/Kurnool for preparing the detailed estimate.

The Chief General Manager/P&MM & IPC/APSPDCL is requested to process the estimate only after receipt of the Undertaking, submission of Bank Guarantee and entering into MOU from the developer by this office.

Yours faithfully,

B.V. Shanthi Sudha 27/4/17

Executive Director (1/12)
HRD & Planning

Copy to:

Chief Engineer/ Construction/APTRANSCO/VS/Hyderabad
Chief Engineer/Kadapa Zone/APTRANSCO/Kadapa
Chief Engineer/IPC & Power Systems/APTRANSCO/VS/Hyderabad
Chief Engineer/SLDC /APTRANSCO/VS/Gunadala
Chief Engineer/Commercial/APPCC/VS/Hyderabad
Chief General Manager/P&MM & IPC/ APSPDCL/Tirupathi
Superintending Engineer/OMC/APTRANSCO/Kurnool
Superintending Engineer/Operation/APSPDCL/Kurnool
M/s NREDCAP, 5-8-207/2, Pisgah Complex, Nampally, Hyderabad – 500001