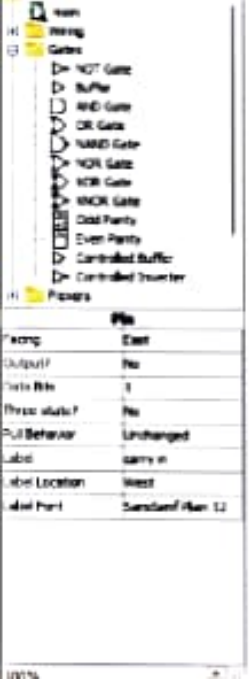

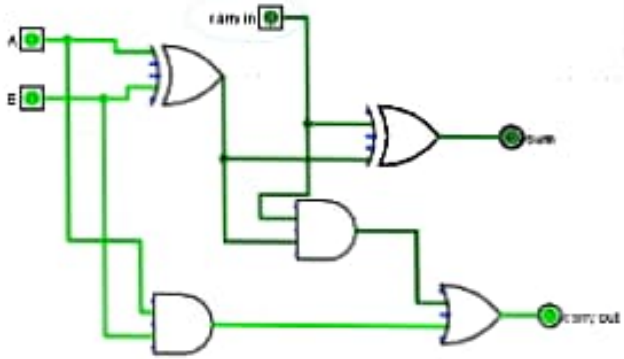

Inputs			Outputs	
A	B	C - IN	Sum	C - Out
0	0	0	0	0
0	0	1	1	0
0	1	0	1	0
0	1	1	0	1
1	0	0	1	0
1	0	1	0	1
1	1	0	0	1
1	1	1	1	1

Logical Expression for SUM: = A' B' C-IN + A' B C-IN' + A B' C-IN' + A B C-IN = C-IN (A' B' + A B) + C-IN' (A' B + A B') = C-IN XOR (A XOR B) = (1,2,4,7)

We use cookies to ensure you have the best browsing experience on our website. By using our site, you acknowledge that you have read and understood our Cookie Policy & Privacy Policy

Got It !