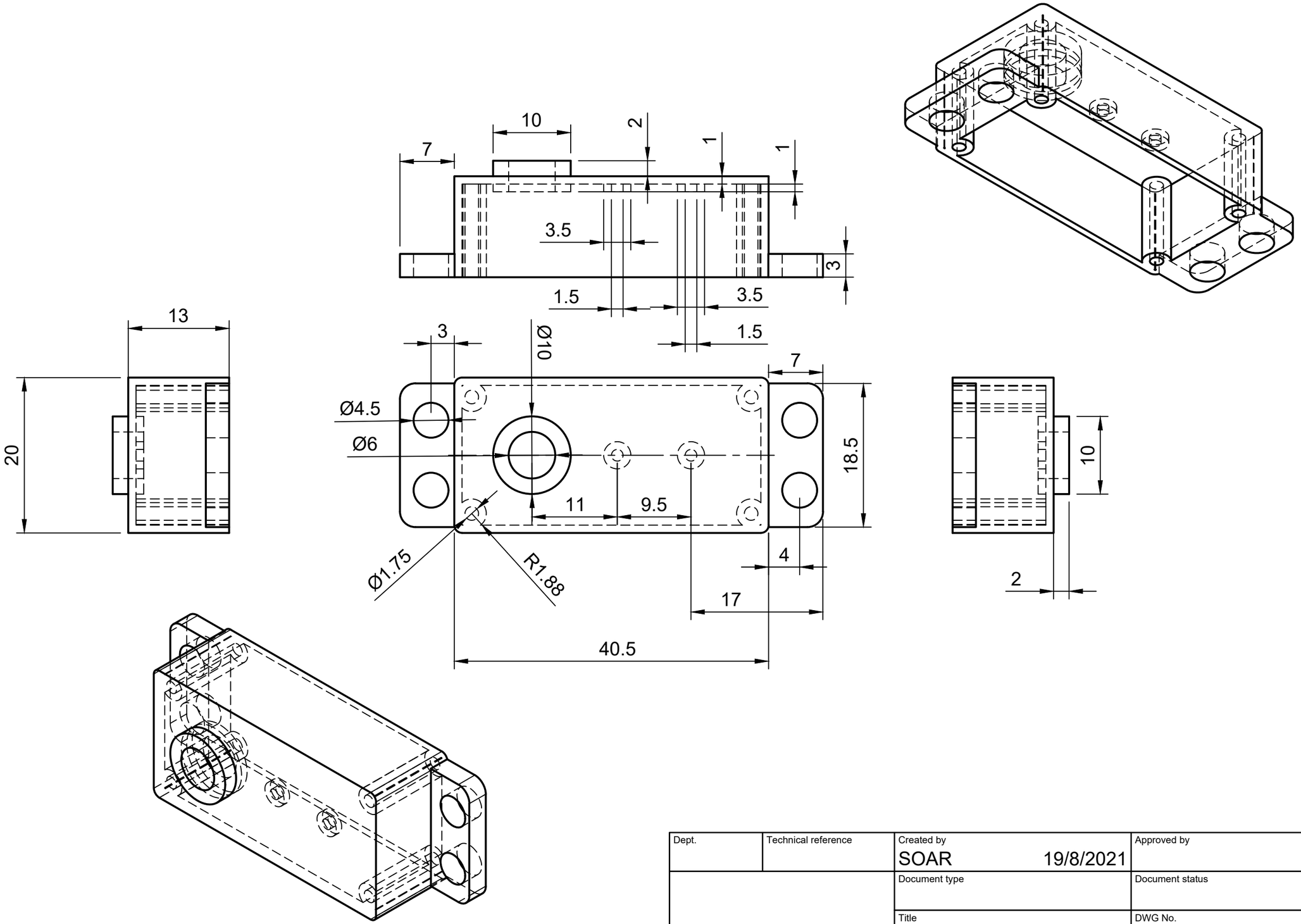

Dept.	Technical reference	Created by SOAR 19/8/2021	Approved by
		Document type	Document status
		Title MG996R_Shell_Top	DWG No.
			Rev. / Date of issue / Sheet 1/1