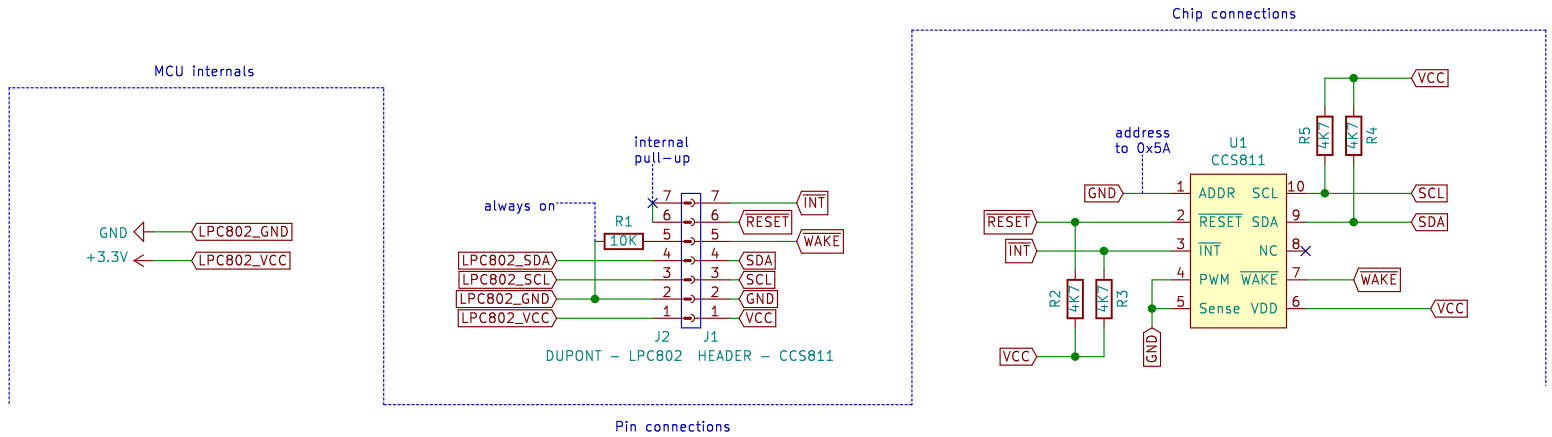

Author: Sai Varun Ramavath
for submission as one part of final exam for EECS3215
York University, Toronto, ON, Canada

Sheet: /
File: schem_final.sch

Title: CCS811 Schematic Diagram as used in project

Size: A4	Date: 2020-04-15	Rev: v1.0
KiCad E.D.A. eeschema (5.1.5)-3		Id: 1/1