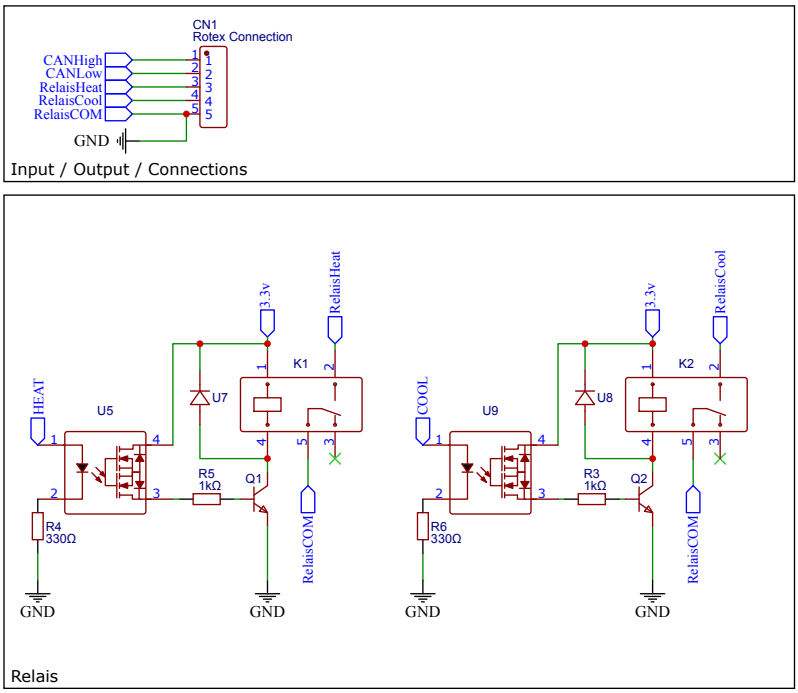

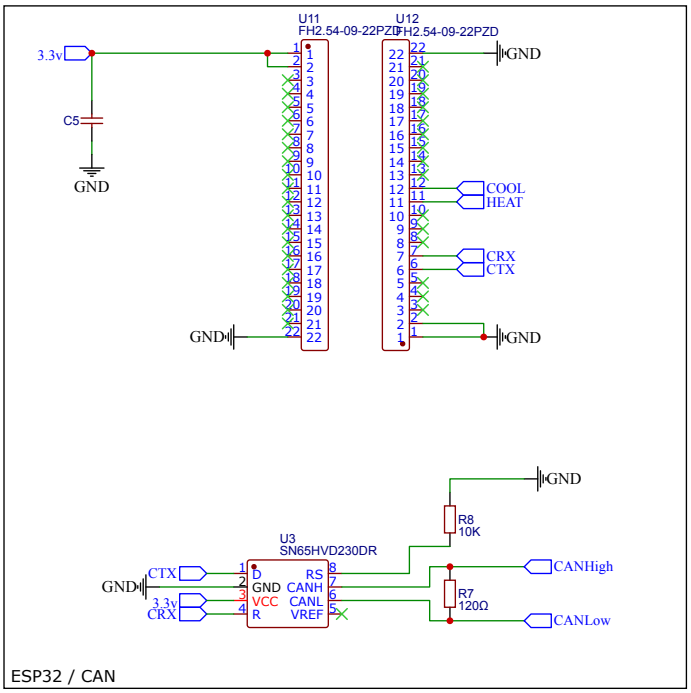

TITLE: HPSU-CAN-ESPHOME		REV: 0.1
	Company: SmartPassiveHouse.com	Sheet: 1/1
	Date: 2024-04-13 Drawn By: Bernd	