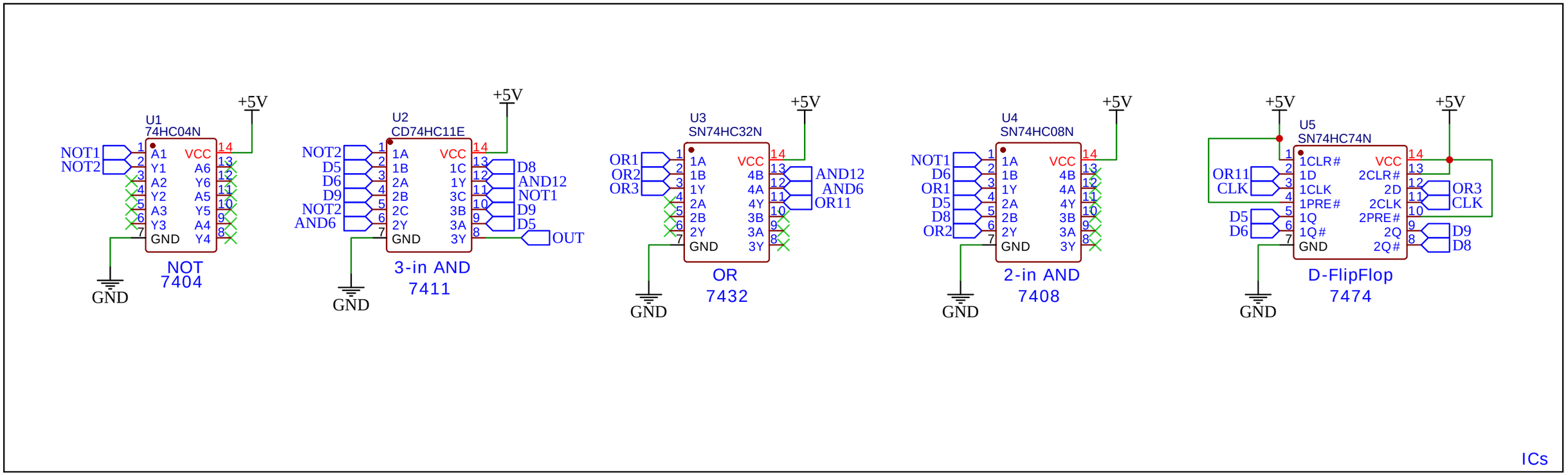

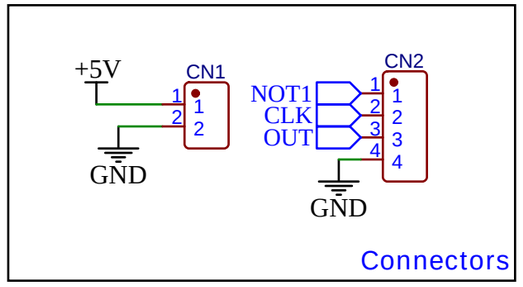

TITLE: Sequence Detector - 1001		REV: 1.0
	Company:	Sheet: 1/1
	Date: 2023-04-16 Drawn By: Souvik Ghosh	