Prague University of Economics and Business
Faculty of Informatics and Statistics

# Heuristics for Real-Time Train Dispatching

MASTER THESIS

Study program: Econometrics and Operations Research

Author: Ing. Bc. Jan Švrčina
Supervisor: Ing. Miroslav Rada, Ph.D.

Prague, May 2026

## Declaration on the Use of Artificial Intelligence

1) No artificial intelligence tools were used in the preparation of the submitted work.

2) I confirm that artificial intelligence tools were used in the preparation of the submitted work. Specifically, they were used in the following ways:

- improvement of grammar and language style,
- searching for and summarizing literature,
- editing and expanding textual sections,
- generation of parts of source code,
- data generation,
- generation of images and other media,
- other (please specify).

Each use of any of the above methods is separately documented in an appendix to the thesis, which provides a more detailed explanation of which tool was used in which specific part of the work; the author's own contribution is highlighted.

I confirm that:

- my work is original and was prepared in accordance with ethical standards, in particular the Code of Ethics of the Prague University of Economics and Business; that all information sources used are properly cited in the work; and that any generated content has been verified by me;
- I accept full responsibility for the entire content of the thesis.

## Acknowledgements

Poděkování.

## Abstrakt

Abstrakt.



### Klíčová slova

klíčové slovo, další pojem, jiný důležitý termín, a ještě jeden



## Abstract

Abstract.



### Keywords

keyword, important term, another topic, and another one

# Contents

# List of Figures

Poznámka: Seznam obrázků je vhodné použít, pokud počet obrázků v textu práce je větší než 20.

# List of Tables

Poznámka: Seznam tabulek je vhodný použít, pokud počet tabulek v textu práce je větší než 20.

# List of source codes

7.1 Ukázka zpracování pomocí Pythonu . . . . . 35

Poznámka: Seznam výpisů programového kódu je vhodné použít, pokud počet vložených objektů tohoto typu je větší než 20.

# List of abbreviations

**BCC** Blind Carbon Copy
**CC** Carbon Copy
**CERT** Computer Emergency Response Team
**CSS** Cascading Styleheets
**DOI** Digital Object Identifier
**HTML** Hypertext Markup Language
**REST** Representational State Transfer
**SOAP** Simple Object Access Protocol
**URI** Uniform Resource Identifier
**URL** Uniform Resource Locator
**XML** eXtended Markup Language

Poznámka: Seznam zkratek je vhodný použít, pokud počet zkratek v textu práce je větší než 20 a nejedná se o zkratky běžné. Každou zkratku je třeba při jejím prvním použití vymezit, např.: „Pro zkoumání závislosti jsme použili regresní analýzu, konkrétně zobecněné lineární modely (*generalized linear models*, GLM).“

# 1. Introduction

## 1.1 Motivation

Railway transportation remains relevant even after its long history due to its efficiency, safety, and sustainability, however the most limiting factor has always been the use of the required infrastructure. As such the critical problem to utilize the railway effectively has always been scheduling. The complexity of this problem is continuously increasing with size and intricacy of the railway system as well as the demand to use it.

Traditionally scheduling was done manually by humans, only with the advancements of optimizing algorithms and computational power are humans aided by computers. This still produces a static schedule that might be unusable if a disruption occurs. This is where train dispatching comes to play where the decisions are done in real-time, managing delays and conflicts as they happen - this part is often still only done by humans and provides a challenge for optimization algorithms as they need to find acceptable solution in the matter of minutes.

## 1.2 Goals

The main goal of this thesis is to develop a heuristic that is capable of train dispatching in real-time with interpretable results - a human should be able to understand the structure of the result to verify its validity.

The heuristic will be evaluated on the *DISPLIB: Train Dispatching benchmark library* (**kloster2025displibli** consisting of train dispatching problem (TDP) instances from real world data. This library of instances was introduced for an optimization competition.

A significant part of this thesis is focused on the decomposition of the problem as presented in the *DISPLIB*. This is the main innovation which allows us to use a top-down approach, reducing the problem into smaller parts and solving the conflicts in the subproblems, as opposed to the bottom-up approach, building up the solutions by resolving constrains sequentially, which is used by the winning solutions in the *DISPLIB* competition.

## 1.3 Thesis structure

This thesis is structured in the following chapters with their contents:

1. *Introduction* - outlines the motivation, goals and structure of this thesis.
2. *Literature review* - review of the pertinent literature separated into 3 parts. First is literature connected to the *DISPLIB*. Second are the most relevant resources inspiring

the heuristic or providing key theoretical ideas. Third is an overview of selected state of the art in scheduling optimization.

3. *Theoretical background* - basic theory necessary for the description of the solutions. Main focus is on graph topology and the use of alternative and disjunctive graphs for scheduling models.
4. *Methodology* - detailed description of the problem, decomposition and heuristic.
5. *Results* - presentation of performance of the heuristic on the *DISPLIB* instances.
6. *Conclusion* - discussion of results and resume of main ideas presented in this thesis.

# 2. Literature review

This chapter provides a review of the relevant literature separated into 3 parts. First is literature reverent to the *DISPLIB*. Second are the most relevant resources inspiring the heuristic or providing key theoretical ideas. Third is an overview of selected state of the art in scheduling optimization.

## 2.1 DISPLIB

As the main goal of this thesis is to make a heuristic that solves instances from the *DISPLIB* library, we provide a review of the introductory paper as well as a description of the competition winning solutions.

### 2.1.1 Problem and library

The train dispatching problem (TDP) which this thesis is working with is presented in *DISPLIB: A library of train dispatching problems* (**kloster2025displiblibrarytraindispatching**) alongside the collection of instances which can be used to benchmark this problem. This provides an important step for the subfield of train dispatching optimization - a unified problem format and real-life data to be used for benchmarking. The instances and competition results can be accessed from `https://displib.github.io/`.

> ... each study (on train scheduling) is typically tightly connected with a specific industrial use case. Code and data are seldom shared publicly. This fact hinders reproducibility, and has led to a proliferation of papers describing algorithms for more or less compatible problem definitions, without any real opportunity for readers to assess their relative performance. Inspired by the successful communities around MILP, SAT, TSP, VRP, etc., we introduce a common problem definition and file format, *DISPLIB*, which captures all the main features of train re-routing and re-scheduling. (**kloster2025displiblibrarytraindispatching**)

The instances are published with best known solutions (assumed with unlimited time), for the 10-minute computation time limit only the competition team rankings are presented, without overview of the actual solutions.

### 2.1.2 Competition and solutions

Part of the presentation of *DISPLIB* was also the announcement of the competition for optimization using this library. The competition concluded at the Optimization and Decision

Science Conference (ODS) 2025 where they presented the winners. Unfortunately the materials for the solutions are not available, and only one team wrote a paper about their solution. Still, we find essential to provide the reader with the description for other solutions, so the limited information from the book of abstracts for the ODS 2025 (**ods2025bookofabstracts**) is summarized.

The first place went to Carolin Scholl and Luka Stärk (DB Systel GmbH). Their solution is based on branch and bound inspired by Monte Carlo Tree Search (**DARIANO2007643**), prioritizing not only lower bound improvement but also search for feasible solutions. In each step of the tree they resolve the chronologically first conflict either by setting precedence to either of the trains on the conflicting resources or by rerouting either train if possible. This is a bottom-up approach, only adding the necessary constrains for current conflicts.

The second place went to Openbus team (ETH Zürich) which published a description of their solution in *Handling Conflicts in Microscopic Railway Timetabling at Scale: A Hybrid Approach*[1] (**Dubach2025handling**). Their solution utilizes 2 distinct solvers which run in parallel. First one is a Logic-Based Benders Decomposition (LBBD) procedure (**Leutwiler2022logic**) where a master mixed-integer programming (MIP) problem performs a selection of current available paths, slave satisfiability modulo theory (SMT) solver creates a feasible timetable if possible (without conflicts) and a subproblem detects conflicts and adds them SMT solver, which in turn adds cuts to the master problem to maintain feasibility. Figure **??** show the diagram of the solver as presented in their poster. Second solver uses a simpler MIP representation which iteratively relaxes the bounds for conflicting resources and tightens the bounds for nonconflicting resources converging to a feasible solution. Both of these solvers use a bottom-up approach, after a bound tightening procedure is applied globally. The authors argue that both of these solvers exploit different instance structures and share their bounds to improve convergence.

The third place went to Venislav Steliyanov Varbanov (independent). This solution also uses an MIP model with a decomposition to reduce the number of time variables - this idea is also used by the heuristic in this thesis, inspired by the provided description. After this aggregation of time variables, the conflicts are again resolved sequentially, similarly to the other 2 solutions.

We can see that while the winning solutions may differ in their model representation and optimization approach, and 2 of them use a certain level of aggregation, they have one thing in common - they resolve the conflicts sequentially, and thus they only need to consider the conflicts that arise in the current partial solution and therefore the number of constrains and variables necessary to prevent the conflicts stays limited.

[1] This paper is not officially published, only a pre-print was available.

**Figure 2.1**
*Openbus DISPLIB competition poster*

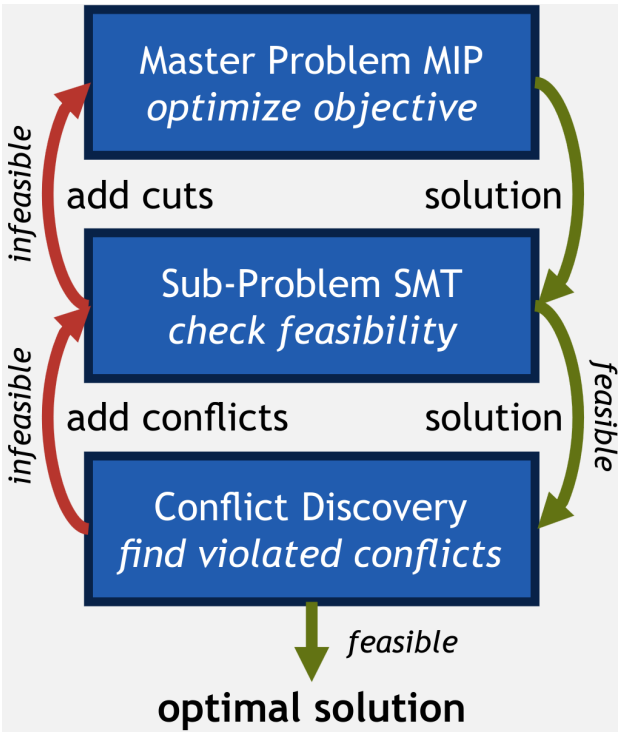


*Source:* ETH Zürich Research Collection (**Dubach2025poster**)

## 2.2 Theory and heuristics

While the *DISPLIB* winning solutions provided us with the ideas of aggregation of variables and combining conflict resolutions, it provided very little on the actual implementation. This section describes the relevant sources to explain the necessary theory to model the problem effectively.

Referenced by the winning solution is *A Branch and Bound Algorithm for Scheduling Trains in a Railway Network* (**DARIANO2007643**). It uses an alternative graph formulation for the train scheduling problem. With this representation we can model resource conflicts with alternative precedence arcs. It also describes the idea of inferred selection, meaning that by choosing one precedence alternative for a resource implies selection on another resources (the alternative is forbidden as it would produce an infeasible solution).

*Job-shop Scheduling with Blocking and No-wait Constraints* (**MASCIS2002498**) introduces the alternative graph concept as a generalization of the disjunctive graph (**roy1964problemes**). The alternative graph is used to formulate a model for the blocking job-shop problem (BJSP) that is closely related to TDP.

*Improving Real-Time Train Dispatching: Models, Algorithms and Applications.* (**dariano2008improving**) provides static implication rules for the alternative graph representation that can be used for

inferred selection based on the structure of TDP.

*Railway scheduling problems and their decomposition* (**Strotmann2007**) is thesis that show decomposition techniques that inspired the decomposition used in this thesis to split the global problem into small subgraphs using border operations and a global synchronizer to merge the solution from these subgraphs and deal with potention conflicts.

## 2.3 State of the art

Because the description of the solutions that are directly connected to this thesis is limited, we provide the reader with an overview of the recent state-of-the-art solutions for closely related problems in train dispatching and scheduling.

*Optimizing train dispatching for the Union Pacific Railroad* (**boccia2025optimizing**) presents an automated dispatching system that is in use on a real rail network. It uses a decomposition of the problem and global synchronizer to resolve conflict. It is a prime example how optimization can improve real-life solutions.

*A Branch-and-Cut Algorithm for Scheduling Train Platoons in Urban Rail Networks* (**chai2024branch**) describes a mixed-integer linear problem (MILP) for scheduling of train platoons, problem where different vehicles are flexibly and dynamically coupled and decoupled.

Authors in *Decentralized Multi-Agent Coordination for Real-Time Railway Traffic Management* (**damato2025decentralised**) propose the use of another emerging idea - instead of central or area based decomposition schedulers, trains cooperate as separate agents to prevent conflicts and achieve efficient scheduling. This decentralized nature of cooperation has already been used on drone related problems with success (**HertJINTHW_paper**).

# 3. Theoretical background

This chapter will cover the necessary theory used to formulate and solver our problem. Main focus will be on graph topology and alternative graphs and their relation to the train dispatching problem.

## 3.1 Basic definitions

While some of these definitions may feel redundant, we will use them as an opportunity to establish the notation. Most of the definitions are paraphrased from *Handbook of Graph Theory* (**gross2013handbook**) with notation adjusted to ours.

Graph is an ordered pair $G = (V, E)$, where $V = \{v_i\}_{i=1}^{n_v}$ is a set of vertices [1] and $E = \{e_i\}_{i=0}^{n_e}$ is a set of edges, where edge $e = \{u, v\}$, $u, v \in V$ is an *unordered* pair of vertices.

Directed graph (digraph) is an ordered pair $G = (V, E)$, where $V = \{v_i\}_{i=1}^{n_v}$ is a set of vertices and $E = \{e_i\}_{i=0}^{n_e}$ is a set of edges[2], where edge $e = (u, v)$, $u, v \in V$ is an *ordered* pair of vertices.

Multigraph is an ordered tuple $G = (V, E, r)$, where $V = \{v_i\}_{i=1}^{n_v}$ is a set of vertices, $E = \{e_i\}_{i=0}^{n_e}$ is a set of edges and $r: E \to \{\{u, v\} \mid u, v \in V\}$ is a mapping from edges to pair of endpoint vertices.

Directed multigraph is an ordered tuple $G = (V, E, s, t)$, where $V = \{v_i\}_{i=1}^{n_v}$ is a set of vertices, $E = \{e_i\}_{i=0}^{n_e}$ is a set of edges and $s: E \to V$ is a source (start) mapping from edges to vertices and $t: E \to V$ is a target (end) mapping from edges to vertices.

Example of each type of graph is in figure **??**.

As you can see in figure **??**, digraph allows for parallel edges (2, 3) and (3, 2). This will be a useful property for the alternative graph definition.

Since we will mostly be working with directed graph, to following definitions are tailored for directed graphs. The following definitions of operators also abuse the notation by omitting the specification of graph $G$, which will be included in the context of multiple graphs if necessary.

Source (start) $(e) = u$, $e = (u, v)$ is the starting vertex of edge $e$.

Target (end) $(e) = v$, $e = (u, v)$ is the ending vertex of edge $e$.

[1] Vertices are often called nodes.

[2] Commonly the edges in directed graphs are called arcs.

**Figure 3.1**
*Example of graph (A), digraph (B), multigraph (C) and directed multigraph (D)*

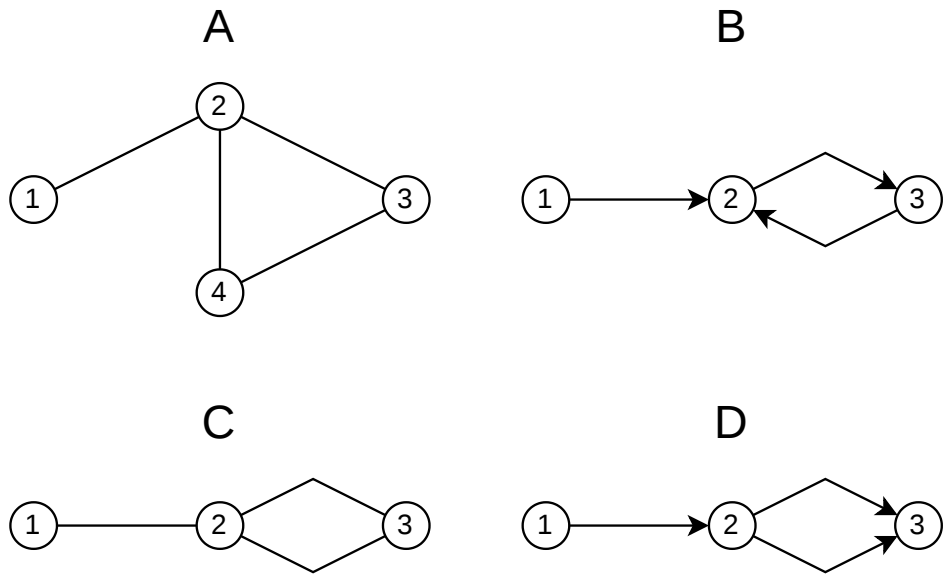


Incoming edges $(v) = \{e \mid t(e) = v,\ e \in E\}$ of vertex $v$ is a set of edges $e$ that end in $v$.

Outgoing edges $(v) = \{e \mid s(e) = v,\ e \in E\}$ of vertex $v$ is a set of edges $e$ that start in $v$.

Predecessors (In-neighborhood) $(v) = \{u \mid u = (e),\ e \in (v)\}$ of vertex $v$ is a set of vertices $u$ that are connected to $v$ via its incoming edges.

Successors (Out-neighborhood) $(v) = \{w \mid w = (e),\ e \in (v)\}$ of vertex $v$ is a set of vertices $w$ that are connected to $v$ via its outgoing edges.

In-degree $(v) = |(v)|$ is the number of incoming edges of $v$.

Out-degree $(v) = |(v)|$ is the number of incoming edges of $v$.

Path is $P = \mathrm{P}(u,\ v)$ from $u$ to $v$ is a sequence of edges $(e_i)_{i=1}^{N}$, such that $(e_{i-1}) = (e_i)$, $2 \leq i \leq n$, $u = src(e_0)$ and $v = (e_n)$.

Cycle is a path that starts and ends in the same vertex.

## 3.2 Graph topology

Directed acyclic graph (DAG) is directed graph that contains no cycle.

Topological order is a sequence of vertices in directed graph $(v_i)_{i=1}^{|V|}$ such that $e = (u, v) \implies u \prec v$ ($u$ appears before $v$ in the sequence).

Topological order can only be created for acyclic graphs.

*Proof.* By contradiction, for path starting at $u$ and ending at $v$, $u \prec v$ in the topological order, because for each $e = (x, y)$ in path, $x \prec y$ and ordering $\prec$ is transitive. For cycle $u$ and $v$ are in the same spot in the order, this is a contradiction. □

To detect a cycle and get a topological sort we use algorithm **??**, it is a combination of depths first search (DFS) for cycle detection and DFS for topological sorting (**CLRS2022**). It runs in O($|V| + |E|$) time complexity with O($|V|$) required space. It allows us to do both cycle detection and topological sort in one pass of DFS.

[float, caption=Topological sort with cycle detection, label=alg:toposort] input: graph G output: () if G contains cycle else topological order of G

function: DFS(v, label, stack) if label(v) is InRecursion return true else if label(v) is Done return false end

label(v) ← InRecursion

foreach s ∈(v) if DFS(s, label, stack) return true end end

stack.push(v) label(v) ← Done

return false end

begin foreach v ∈ V(G) label(v) ← NotDone end

stack ← EmptyStack

foreach v ∈ V(G) if DFS(v, label, stack) return () end end

order ← reverse(stack) return order end

## 3.3 Alternative graphs

Alternative graphs were introduced in (**MASCIS2002498**). They provide a very useful framework for modeling resource allocation problems with blocking. They are a generalization of disjunctive graphs (**roy1964problemes**).

Alternative graph is an ordered tuple $G = (V, E, A)$, where $V = \{v_i\}_{i=1}^{n_v}$ is a set of vertices, $E = \{e_i\}_{i=0}^{n_e}$ is a set edges $e = (u, v)$, $u, v \in V$, and $A = \{a_i\}_{i=0}^{n_a}$ is a set of disjunctive (alternative) edge pairs $a = ((u, v), (x, y))$, $u, v, x, y \in V$.

We denote the alternative $\bar{e}$ to the edge $e$ from the disjunctive pair $a = (e, \bar{e})$.

To illustrate the concept of alternative graphs, figure **??** shows an alterative graph with 3 disjunctive pairs.

**Figure 3.2**
*Example of alternative graph*

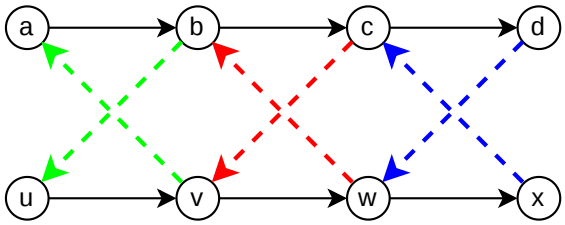


A selection $S$ is a set of edges obtained by from $A$ by choosing at most one edge from each pair. The edges in this selection are selected, their alternatives (the other edge from the pair) is forbidden.

Selection $S$ is complete if exactly one edges is chosen from each pair, otherwise it is a partial selection.

Selection $S$ is consistent if graph $(V, E \cup S)$ does not contain a cycle. If the graph does contain a cycle, the selection is inconsistent.

To illustrate the selection terms, figure **??** shows different types of selections from on alternative graph from figure **??**.

Alternative edge $e$ is inferred from selection $S$, $S \vdash e$ if $S \cup \{\bar{e}\}$ is an inconsistent selection, meaning that the choice of $e$ from alternative pair $(e, \bar{e})$ can be inferred from $S$ because choosing $\bar{e}$ would be inconsistent. Similarly, we can say that one alternative edge $x$ implies another $y$, $x \implies y$ if $\{x\} \vdash y$.

An example from on graphs in figure **??**, we can see that $(b, u) \implies (c, v)$ and $(v, a) \implies (w, b)$ etc.

It is possible to have a partial consistent selection $P$ for which there exist no complete consistent complete selection $C$, $P \subset C$. One such case is in figure **??**, where $(b, u) \implies (c, v)$ and $(x, c) \implies (w, b)$. Because $(c, v)$ and $(w, b)$ are in the same disjunctive pair, we cannot make a consistent selection for this pair.

**Figure 3.3**

*Examples for partial inconsistent (A), partial consistent (B), complete inconsistent (C), and complete consistent (D) selections*

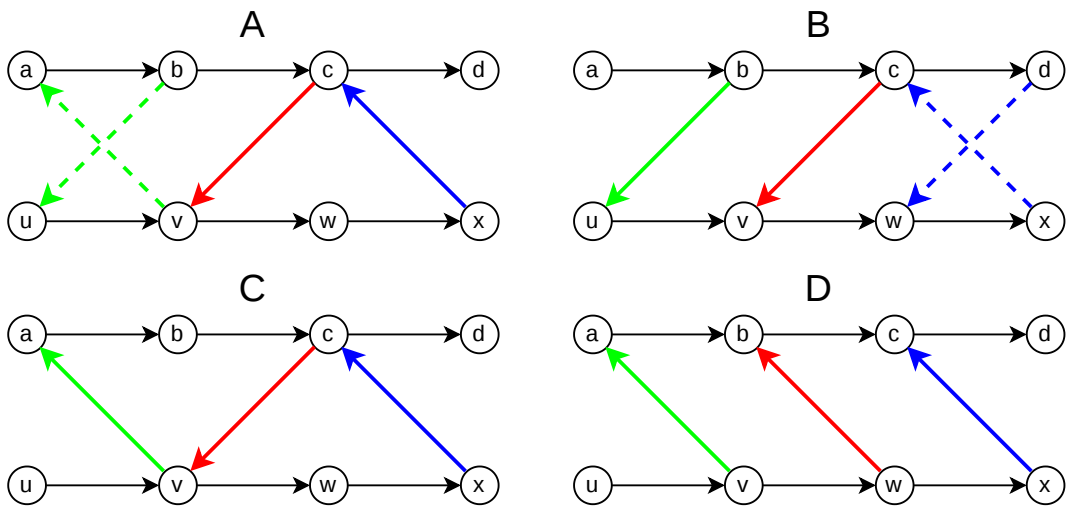


**Figure 3.4**

*Examples of partial consistent selection without possible complete consistent selection*

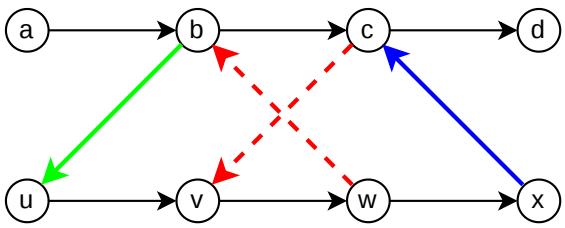

### 3.3.1 Weighted graphs

To extend the descriptive ability of graphs to model problems we assign properties to vertices or edges. One of the most common one is to add weights to edges.

Weighted directed graph is an ordered tuple $G = (V, E, w)$, where $V$ and $E$ are same as in digraph definition **??**, and $w : E \to \mathbb{R}$ is an edge weight mapping.

Length $\mathrm{L}(\cdot)$ of path $P$ is the sum of the weights for each edge,

$$\mathrm{L}(P) = \sum_{e \in P} w_e \tag{3.1}$$

Length of the longest path $\mathrm{L}_{\max}(\cdot)$ from $u$ to $v$ is

$$\mathrm{L}_{\max}(u, v) = \max_{P \in \mathcal{P}_{u,v}} \mathrm{L}(P), \tag{3.2}$$

where $\mathcal{P}_{u,v}$ is the set of all paths from $u$ to $v$.

The length of the longest path can only be calculated for a graph without any positive length cycles, otherwise we could simply go in the cycle indefinitely to prolong the path (**gross2013handbook**).

In our model, we will use weighted DAG we call an *event graph*, where each vertex corresponds to an event, edge direction assigns precedence of events and the weight of an edge will be corresponding to a minimal duration between events. All events share the origin $o$ which determines the start of the timeline, and it is used to calculate the time of each following event.

**Example** Figure **??** shows an event graph for 3 trains sharing resources. Edges $(o, a)$, $(o, g)$, and $(o, u)$ set the earliest start of the train, horizontal edges define the fastest passing of the section and diagonal edges ensure precedence for resources e.g. edge $(b, g)$ ensures that $g$ starts after $b$, since section $(a, b)$ required the same resource as $(g, h)$.

The time of the event $x$ in the even graph can be calculated as the longest path from origin $o$ to $x$, $\mathrm{T}(x) = \mathrm{L}_{\max}(o, x)$.

Finding all the paths from $o$ to each $x \in V$ would be very expensive, by DFS the complexity is exponential (**homer2011computability**).

First optimization is the use of Bellman principle (**light2024principle**)(**bellman1952dynamic**),

$$\mathrm{T}(v) = \mathrm{L}_{\max}(o, v) = \max_{u \in (v)} \mathrm{L}_{\max}(o, u) + w_{(u,\ v)}. \tag{3.3}$$

**Figure 3.5**
*Examples of event graph for 3 trains with shared resources*

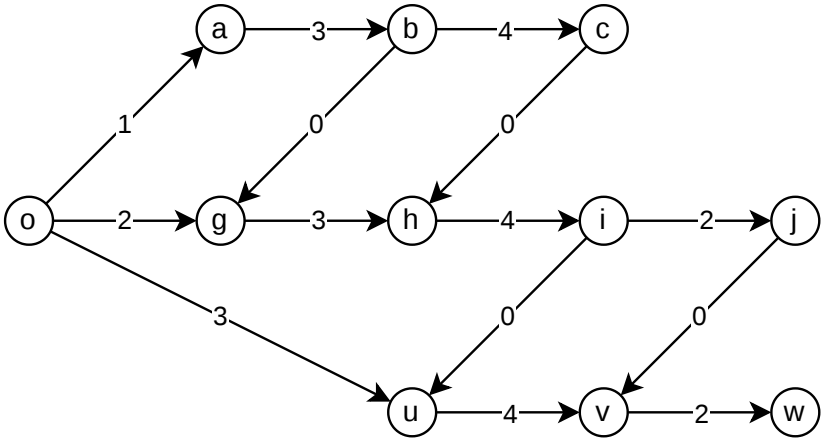


This is principle is used by the Floyd-Warshall algorithm (**floyd1962algo**) and Dijkstra's algorithm (**Dijkstra1959**) which are used for finding the shortest paths for all pairs for vertices and from a select starting vertex respectively. Both of them could be adjusted to find the longest path within polynomial complexity, $\mathrm{O}(|V|^3)$ for Floyd-Warshall and $\mathrm{O}((|V|+|E|)log|V|)$ for Dijkstra with binary heap.

Since we already use algorithm **??** to detect a cycle, we can just process the time of the events in the topological order, because topological order guarantees that any predecessors are already processed.

Critical path $\mathrm{CP}(\cdot)$ for vertex $v$ is the longest path from origin $o$ to $v$.

Critical path is limiting the earliest start of event $v$, delaying any event along this path will also delay the event $v$,

$$\mathrm{L}(\mathrm{CP}(v)) = \mathrm{T}(v). \tag{3.4}$$

Critical path edge $\mathrm{CPE}(\cdot)$ of $v$ is the last edge of the critical path for $v$.

We can again use the Bellman principle to reconstruct the critical path,

$$\mathrm{CP}(v) = \mathrm{CP}(u) \cup \{(u,\, v)\},\ \mathrm{CPE}(v) = (u,\, v). \tag{3.5}$$

Algorithm **??** outputs the time $\mathrm{T}(\cdot)$ and critical path edge $\mathrm{CPE}(\cdot)$ for each vertex in the event graph. It runs in $\mathrm{O}(|V| + |E|)$ time complexity.

In our event graph, the first vertex in the topological order will always be the origin $o$ as it is the only vertex $v$ with $(v) = 0$.

[float, caption=Time and critical path predecessor calculation, label=alg:time] input: weighted graph G, topological order O output: time T and critical path edge CPE for each vertex in G

begin foreach v $\in$ V(G) T(v) $\leftarrow$ 0 CPE(v) $\leftarrow$ Undefined end

foreach u $\in$ O $\setminus$ o foreach (u, v) $\in$(u) if T(v) $<$ T(u) + $w_{u,v}$ T(v) $\leftarrow$ T(u) + $w_{u,v}$ CPE(v) $\leftarrow$ (u, v) end end end end

**Example** For event graph in figure **??**, the time and critical path edge output from algorithm **??** is in table **??**. So the vertices in the critical path for $a$ are ($o$, $a$, $b$, $c$), for $j$ are ($o$, $a$, $b$, $c$, $h$, $i$, $j$) and for $w$ are ($o$, $a$, $b$, $c$, $h$, $i$, $u$, $v$, $w$).

**Table 3.1**
*Time and critical path edge for vertices in example from figure* **??**

| vertex | T | CPE |
|---|---|---|
| a | 1 | (o, a) |
| b | 4 | (a, b) |
| c | 8 | (b, c) |
| g | 4 | (b, g) |
| h | 8 | (c, h) |
| i | 12 | (h, i) |
| j | 14 | (i, j) |
| u | 12 | (i, u) |
| v | 16 | (u, v) |
| w | 18 | (v, w) |

# 4. Methodology

## 4.1 Problem description

Most of the problem description is taken from the *DISPLIB format specification* (**kloster2025displibspec**), a concise explanation is in accompanied paper (**kloster2025displiblibrarytraindispatching**).

Each instance in the *DISPLIB* library consist of set of trains and an objective to be minimized. All data is presented in JSON format (**pezoa2016foundations**). Train is defined by an operation graph which is DAG, operation has the following content:

- minimal duration
- start lower bound (optional)
- start upper bound (optional)
- list of successors
- list of required resources
  - resource name
  - release time

Data **??** show and example of an operation entry in the instance JSON.

All operation graphs have one entry (start) operation, with no predecessors, and one exit (end) operation, with no successors. Each operation ends exactly when the successor operation starts, exit operation has no end.

Resources are anything that is required by the operation, typically physical sections of the railway network. Resources can only be used by one operation at the time and are released after the end of the operation that uses it plus the defined release time.

Objective is defined by a list of objectives components, each with the following content

- train
- operation
- threshold
- coefficient (linear objective)
- increment (stepwise objective)

While the format allows both coefficient and increment to be non-zero, in practice none of the instances mix both in one objective component.

Data **??** show and example of an objective component entry in the instance JSON.

The total objective $J$ is defined as a sum of components for active operations only,

$$J = \sum_{o \in O_{a,J}} c_o \max\{0, t_o - \bar{t}_o\} + d_o H(t_o - \bar{t}_o), \tag{4.1}$$

where $O_{a,J}$ is a set of active operations that have an objective component, $t_o$ is start of the operation, $\bar{t}_o$ is the threshold for the operation, $c_o$ is the linear objective coefficient, $d_o$ is the stepwise objective increment, and $H(\cdot)$ is Heaviside step function (**abramowitz1972handbook**).

A solution to the problem is a sequence of events, each event entry corresponds to start of an operation and contains:

- train
- operation
- time

Solution is also presented in a JSON format, data **??** shows truncated solution example. To reiterate, the end event of an operation is the start event of its successor.

> - The sequence of events is given in chronological order, i.e., the time of each event is greater than or equal to the time of all preceding events.
> - The subsequence of operations applying to each train forms a path through that train's operations graph, starting at the entry operation and ending at the exit operation.
> - The time value of each start event satisfies the lower and upper bounds on the start time of the operation.
> - The duration from each start event to the corresponding end event must be greater than or equal to the minimum duration of the corresponding operation.
> - For any pair of operations $o_1$ and $o_2$, where:
>  - the start event of $o_1$ precedes the start event of $o_2$ in the global sequence, and $o_1$ and $o_2$ belong to different trains, and
>  - $o_1$ and $o_2$ use a common resource $r$,
>
>  the following must hold:
>  - the end event for $o_1$ precedes the start event for $o_2$ in the global sequence, and
>  - the duration from the end event of $o_1$ to the start event of $o_2$ is greater than or equal to the release time of resource $r$ in $o_1$.
>
> (**kloster2025displibspec**)

While the events in the solution have a time, their order in the list is still significant, as they define in which order the resources are unlocked and locked. This is to prevent a resource swap situation described in section **??**.

### 4.1.1 Example problem

To illustrate the format we have prepared example problem, the railway network diagram is in picture **??**. The network consists of 3 trains, 18 operations, and 8 railway sections, corresponding to resources.

**Figure 4.1**
*Example railway network*

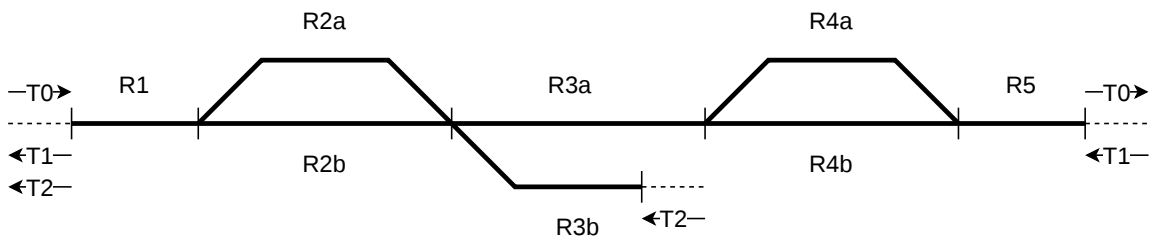


The corresponding operation graph for train 0 (first) is in figure **??**, JSON entry for operation 4 is in data **??**, and JSON entry for objective component for the last operation is in data **??**.

**Figure 4.2**
*Operation graph for train 0*

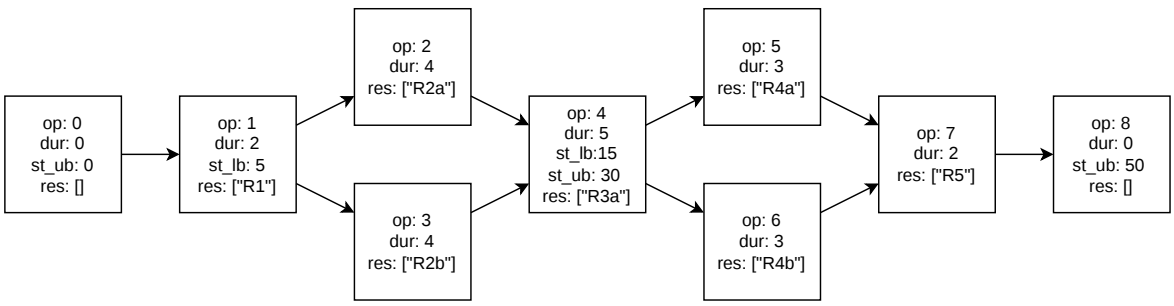


[float, caption=JSON operation entry, label=data:op] "start$_l b$" : 0, "$start_u b$" : 50, "$min_d uration$" : 5, "$resources$" : ["$resource$" : "$R3a$", "$release_t ime$" : 0], "$successors$" : [5, 6] [float, caption=JSON objective component entry, label=data:obj] "type": "op$_d elay$", "$train$" : 0, "$operation$" : 8, "$threshold$" : 25, "$coefficient$" : 1

[float, caption=JSON solution truncated, label=data:events] "events": [ ..., "train": 0, "operation": 5, "time": 15 , "train": 1, "operation": 4, "time": 15 , ... ], "objective$_v alue$" : 25

### 4.1.2 Resource swap

Consider the situation as in figure **??**, where 2 trains A and B are passing a section of 2 resources X and Y in opposite direction. If we were to set events A2 and B2 to the same

time, we would not have a resource collision on either resources (overlap of intervals for operations A1 and B2 on resource X or A2 and B1 on resources Y) but in reality the trains would collide.

**Figure 4.3**
*Resource swap railway*

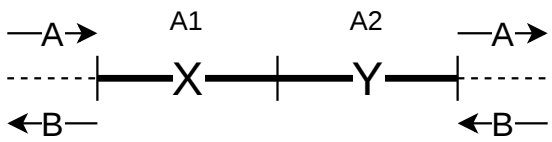


In this situation, resource Y is being acquired by A while holding X and X is being required by B while holding Y.

We can detect the resource swaps using an event graph by cycle detection, like in figure **??** where A2 and B2 form a cycle.

**Figure 4.4**
*Resource swap event graph*

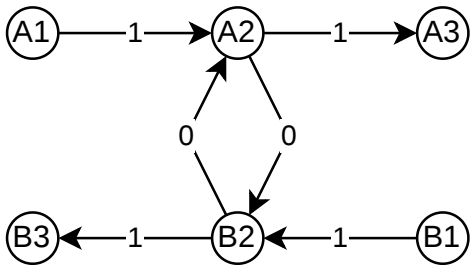


Using cycles in event graph to detect resource swaps only works if all resource precedence edges are present, otherwise we still might have a resource swap situation because the current event times do not create a collision and one or both of the edges that would create the cycle in the event graph are missing.

## 4.2 Problem aggregation

To effectively model the problem we will aggregate the operations and resources from the initial problem into several interconnected structures.

### 4.2.1 Junctions

First aggregation is what we call junctions, corresponding to a single event of one operation starting and one ending (except for starting and ending operations). Because we always want each operation to have single determined event for start and end, the junction graph is a directed multigraph, where each edge corresponds to an operation (as opposed to an operation graph where each operation was a vertex), figure **??** shows and example of an operation graph with corresponding junction graph. We use the name junctions as conceptually, the operations converge and diverge in these points as do real tracks in railway junctions.

**Figure 4.5**
*Operation graph (left) with corresponding junction graph (right)*

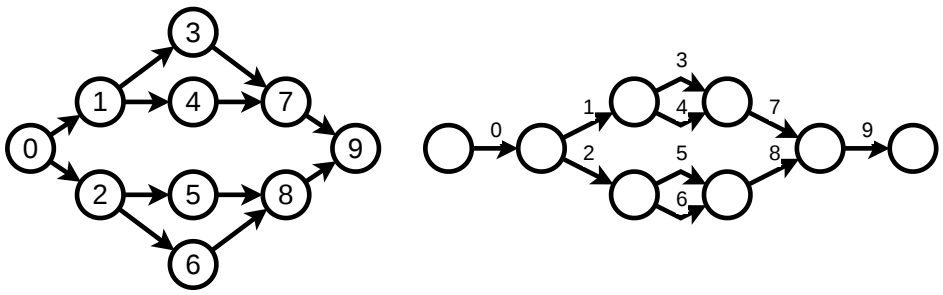


Aside from more natural representation of using vertices as single events and edges as intervals, which translates to the events graphs, we also reduce the number of required vertices and edges, for the example in figure **??**, it is from 9 vertices and 12 edges to 8 vertices and 9 edges, that is including the often redundant start and end events.

#### Disjoint set

To aggregate the variables into junctions, we use a *disjoint set* (**GallerFischer1964**). It is often called the *union-find* data structure, it used to partition elements into non-overlapping (disjoint) set. It has 2 basic operations:

- *Find:* Unary operation, returns to what set item belongs to, usually by returning the representative element.
- *Union:* Binary operation, if the 2 elements belong to different sets, it joins them together.

In short, each element has a parent entry, which is at the start initialized to itself and the representative element of a set always has the parent as itself. To get the representative we traverse the tree upwards via parent entries until we find the representative. When we use the union operation on 2 elements from different sets, the representative of one becomes a representative of the other (if they belong to the same set nothing happens).

To optimize the data structure we use path compression (flattening of the parent tree by assigned the parent of the element to their parent when traversing the tree) and union by size (always attaching smaller tree to bigger tree) (**Tarjan1975**). Both operations with optimizations are in algorithms **??** and **??**.

[float, caption=Disjoint set - find, label=alg:disjset$_{f}ind]input : element voutput : representatives$

begin while $u \neq$ parent($u$) parent($u$) $\leftarrow$ parent(parent($u$)) $u \leftarrow$ parent($u$) end $s \leftarrow u$ return $s$ end

[float, caption=Disjoint set - union, label=alg:disjset$_{u}nion]input : elements uand voutput : none$

begin $u \leftarrow$ find($u$) $v \leftarrow$ find($v$) if $u \neq v$ if size($u$) $<$ size($v$) parent($u$) $\leftarrow v$ size($v$) $\leftarrow$ size($v$) + size($u$) else parent($v$) $\leftarrow u$ size($u$) $\leftarrow$ size($u$) + size($v$) end end end

#### Procedure

The procedure to create the junctions is done for each train separately. For each operation of the train we use the union operation on each pair of successors (just consecutive pairs are sufficient due to the nature of the union operation), this makes sure that each operation end will correspond to one junction. Each set in the *disjoint set* structure will then correspond to one junction where the elements of the set are the outgoing operations. We also add an additional junction to represent the end of the last operation with no outgoing operations.

With these sets, we can assign each operation its start junction. We can assign the end junction for an operation to the start operation of its successors, thus also getting the set of incoming operations for each junction, the end junction of last operation is the additional junction with no outgoing operations.

## 4.3 Levels

Second is the aggregation to levels. We group parallel junctions to levels,[1] as junctions can be parallel and thus mutually exclusive. This is useful to reduce the number of required vertices for each train in the event graph. he incoming (resp. outgoing) set of operations for each level is the union of the incoming (resp. outgoing) operations of its junctions. An example of a junction graph with its corresponding level graph is in figure **??**.

[1] In (**Dubach2025handling**) they call levels *event clusters*, the level term was taken from Venislav Varbanov.

**Figure 4.6**
*Junction graph (top) with corresponding level graph (bottom)*

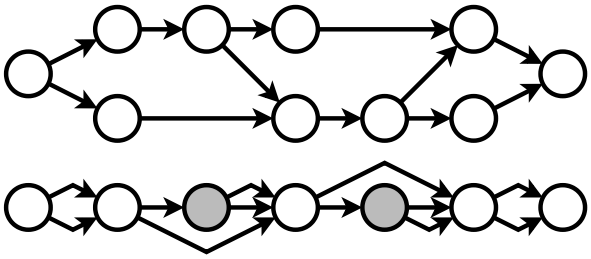

*Note:* Optional levels are gray.

### Required and optional levels

Not all levels need to be passed when traversing the graph. Such levels we call optional, the levels that have to be passed when traversing the graph we call required. In (**Dubach2025handling**) they use the concept of required levels to generate bound constraints. We use required levels to identify routing sections later on.

### Topological generations

To aggregate the junctions into levels, we use the concept of *topological generations* (**Hagberg:2008:Networ**
To create these generations we use adjusted Khan's algorithm for topological sorting (**Kahn:1962:Topologic**
where we group all junctions (vertices) currently without incoming operations (edges) into a level as shown in algorithm **??**.

[float, caption=Topological generation algorithm, label=alg:topogen] input: junction graph $G(J, O)$, junctions $J$ (vertices), operations $O$ (edges) output: levels $(L_0, \ldots, L_n)$ (subsets of junctions)

begin $k \leftarrow 0$ $Z \leftarrow \{J_0\}$

while $Z \neq \emptyset$ $L_k \leftarrow Z$ $Z \leftarrow \{\}$ foreach $i \in L_k$ foreach $(i, j)$ in $(i)$ $(j) \leftarrow (j) \setminus (i, j)$ if $(j) = \emptyset$ $Z \leftarrow Z \cup \{j\}$ end end end $k \leftarrow k + 1$ end

return $(L_0, \ldots, L_n)$ end

### Procedure

We apply algorithm **??** to each train separately.

### 4.3.1 Routes

Now that we have aggregated distinct operation start and end events into junctions and levels, we aggregate the routing decision into routes. Each route consists of set of operations such that if $p$ and $o$ are in the same route and $p$ is a predecessor of $o$ then, $p$ is the *only* predecessor of $o$ and $o$ is the *only* successor of $p$. This follows the train flow network definition in (**fuchs2025optimizing**). An example of how operations are grouped into routs is in figure **??**.

**Figure 4.7**
*Junction graph (top) with corresponding route graph (bottom)*

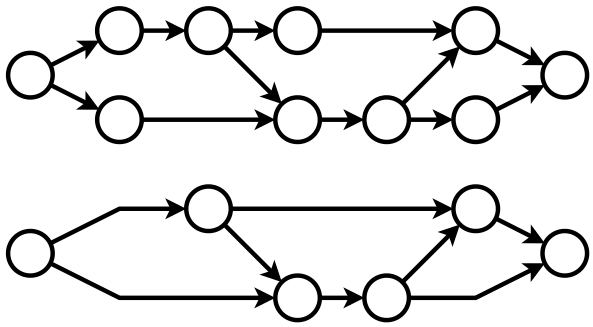

*Note:* Non-routing junctions are gray.

This assignment of routes also generates a set of routing junctions, each having a routing (flow) constraint

$$\sum_{r \in \rho_{\text{in}}(j)} x_r - \sum_{r \in \rho_{\text{out}}(j)} x_r = \begin{cases} 1 & \text{if } j \text{ is a start junction (source)} \\ -1 & \text{if } j \text{ is an end junction (sink)} \\ 0 & \text{otherwise} \end{cases}, \tag{4.2}$$

where $x_r$ is a binary variable determining if route $r$ is used, $\sigma_{\text{in}}(j)$ is a set of incoming routes and $\sigma_{\text{in}}(j)$ is a set of outgoing routes for junction $j$.

#### Procedure

For each train we iterate over operations in topological order and assign them the same route if it is the only successor of its only predecessor, otherwise we create a new route. Procedure follows algorithm **??**

[float, caption=Route assignement, label=alg:route] input: operations $O = (o_0, \ \dots \ o_n)$ in topological order output: route assignment $r(\cdot)$

begin $k \leftarrow 0$

foreach $o \in O$ if $\{p\} = \text{pred}(o) \wedge \{o\} = \text{succ}(p)$ $r(o) \leftarrow r(p)$ else $r(o) \leftarrow k$ $k \leftarrow k + 1$ end end

return $r$ end

# 5. Results

# 6. Conclusion

# 7. Dummy

**Figure 7.1**

*Náhodný výběr z rozdělení* $\mathcal{N}_2(\mathbf{0}, I)$

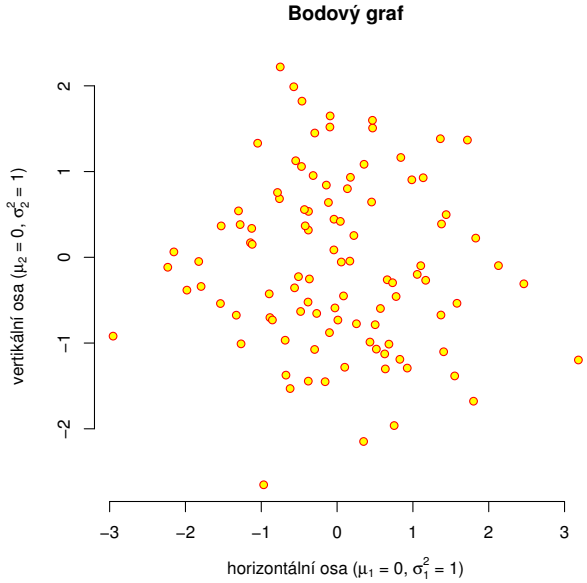


*Poznámka:* Vlastní zpracování na základě dat z ČSÚ.

**Table 7.1**

*Maximálně věrohodné odhady modelů 1 a 2*

| | **1** | **2** |
|---|---|---|
| Abs. člen | −10,01*** | 42,01** |
| | (1,01) | (1,89) |
| Pohlaví (muž) | 9,89* | 8,16 |
| | (5,98) | (8,18) |
| Výška (cm) | 0,78*** | (0,12) |

*Poznámka:* (i) V závorkách jsou uvedeny směrodatné chyby získané na základě 500 iterací neparametrického bootstrapu.
(ii) * p < 0,05, ** p < 0,01, *** p < 0,001.
(iii) Vlastní zpracování na základě dat z ČSÚ.

**Source code 7.1**

*Ukázka zpracování pomocí Pythonu*

```
import numpy as np

def incmatrix(genl1,genl2):
    m = len(genl1)
```

```
    n = len(genl2)
    M = None #to become the incidence matrix
    VT = np.zeros((n*m,1), int)  #dummy variable

    #compute the bitwise xor matrix
    M1 = bitxormatrix(genl1)
    M2 = np.triu(bitxormatrix(genl2),1)

    for i in range(m-1):
        for j in range(i+1, m):
            [r,c] = np.where(M2 == M1[i,j])
            for k in range(len(r)):
                VT[(i)*n + r[k]] = 1;
                VT[(i)*n + c[k]] = 1;
                VT[(j)*n + r[k]] = 1;
                VT[(j)*n + c[k]] = 1;

                if M is None:
                    M = np.copy(VT)
                else:
                    M = np.concatenate((M, VT), 1)

                VT = np.zeros((n*m,1), int)

    return M
```

# Appendices

# A. Název první přílohy

# B. Název druhé přílohy