1. Introduction

1.1 Motivation

Railway transpotation remains relevent even after its long history due to its efficiency, safety, and sustainability, however the most limiting factor has always been the use of the required infrastructure. As such the critical problem to utilize the railway effectively has always been scheduling. The complexity of this problem is continously increasing with size and intricacy of the railway system as well as the demand to use it.

Traditionally scheduling was done manually by humans, only with the advancements of optimizing algorithms and computational power are humans aided by computers. This still produces a static schedule that might be unusable if a disruption occurs. This is where train dispatching comes to play where the decisions are done in real-time, managing delays and conflics as they happen - this part is often still only done by humans and provides a challenge for optimization algorithms as they need to find acceptable solution in the matter of minutes.

1.2 Goals

The main goal of this thesis is to develop a heuristic that is capable of train dispatching in real-time with intepretable results - a human should be able to understand the structure of the result to verify its validity.

The heuristic will be evaluted on the *DISPLIB: Train Dispatching benchmark library* (Kloster et al., 2025) consiting of train dispatching problem (TDP) instances from real world data. This library of instances was introduced for an optimization competition.

A significant part of this thesis is focused on the decomposition of the problem as presented in the *DISPLIB*. This is the main inovation which allows us to use a top-down approach, reducing the problem into smaller parts and solving the conflics in the subproblems, as opposed to the bottom-up approach, building up the solutions by resolving constrains sequentially, which is used by the winning solutions in the *DISPLIB* competition.

1.3 Thesis structure

This thesis is structured in the following chapters with their contents:

1. *Introduction* - outlines the motivation, goals and structure of this thesis.
2. *Literature review* - review of the relevent literature separated into 3 parts. First is literature revelent to the *DISPLIB*. Second are the most revelevant resources inspiring

the heuristic or providing key theoretical ideas. Third is an overview of selected state of the art in scheduling optimization.

3. *Theoretical background* - basic theory necessary for the description of the solutions. Main focus is on graph topology and the use of alternative and disjunctive graphs for scheduling models.
4. *Methodology* - detailed description of the problem, decomposition and heuristic.
5. *Results* - presentation of performance of the heuristic on the *DISPLIB* instances.
6. *Conlusion* - disussion of results and resume of main ideas presented in this thesis.

2. Literature review

This chapter provides a review of the relevent literature separated into 3 parts. First is literature revelent to the *DISPLIB*. Second are the most revelevant resources inspiring the heuristic or providing key theoretical ideas. Third is an overview of selected state of the art in scheduling optimization.

2.1 DISPLIB

As the main goal of this thesis is to make a heuristic that solves instances from the *DISPLIB* library, we provide a review of the introductory paper as well as a description of the competiton winning solutions.

2.1.1 Problem and library

The train dispatching problem (TDP) which this thesis is working with is presented in *DISPLIB: A library of train dispatching problems* (Kloster et al., 2025) alongside the collection of instances which can be used to benchmark this problem. This provides an imporant step for the subfield of train dispatching optimization - a unified problem format and real-life data to be used for benchmarking. The instances and competition results can be accesed from `https://displib.github.io/`.

> ... each study (on train scheduling) is typically tightly connected with a specific industrial use case. Code and data are seldom shared publicly. This fact hinders reproducibility, and has led to a proliferation of papers describing algorithms for more or less compatible problem definitions, without any real opportunity for readers to assess their relative performance. Inspired by the successful communities around MILP, SAT, TSP, VRP, etc., we introduce a common problem definition and file format, *DISPLIB*, which captures all the main features of train re-routing and re-scheduling. (Kloster et al., 2025)

The instances are published with best known solutions (assumed with unlimited time), unfortunatelly for the 10 minute computation time limit only the competition team rankings are presented, without overview of the actual solutions.

2.1.2 Competition and solutions

Part of the presentation of *DISPLIB* was also the anouncement of the competition for optimization using this library. The competition concluded at the Optimization and Decision

Science Conference (ODS) 2025 where they presented the winners. Unfortunatelly the materials for the solutions are not available and only one team wrote a paper about their solution. Still, we find essential to provide the reader with the description for other solutions, so the limited information from the book of abstracts for the ODS 2025 (Barbato et al., 2025) is summarized.

The first place went to Carolin Scholl and Luka Stärk (DB Systel GmbH). Their solution is based on branch and bound inspired by Monte Carlo Tree Search (D'Ariano et al., 2007), prioritizing not only lower bound improvement but also search for feasible solutions. In each step of the tree they resolve the chronologacally first conflict either by setting precedence to either of the trains on the conflicting resources or by rerouting either train if possible. This is a bottom-up approach, only adding the necessary constrains for current conflicts.

The second place went to Openbus team (ETH Zürich) which published a description of their solution in *Handling Conflicts in Microscopic Railway Timetabling at Scale: A Hybrid Approach*[1] (Dubach et al., 2025b). Their solution utilizes 2 distinct solvers which run in parallel. First one is a Logic-Based Benders Decomposition (LBBD) procedure (Leutwiler & Corman, 2022) where a master mixed-integer programing (MIP) problem performs a selection of current available paths, slave satisfiability modulo theory (SMT) solver creates a feasible time table if possible (without conflicts) and a subproblem detects conflicts and adds them SMT solver, which in turn adds cuts to the master problem to maintain feasiblity. Figure 2.1 show the diagram of the solver as presented in their poster. Second solver uses a simpler MIP representation which iteratively relaxes the bounds for conflicing resources and tightens the bounds for non-conflicing resources converging to a feasible solution. Both of these solvers use a bottom-up approach, after a bound tightening procedure is applied globally. The authors argue that both of these solvers exploit different instance structures and share their bounds to improve convergence.

The third place went to Venislav Steliyanov Varbanov (independent). This solution also uses an MIP model with a decomposition to reduce the number of time variables - this idea is also used by the heuristic in this thesis, inspired by the provided description. After this aggregation of time variables, the conflicts are again resolved sequentially, similarly to the other 2 solutions.

We can see that while the winning solutions may differ in their model representation and optimization approach, and 2 of them use a certain level of aggregation, they have one thing in common - they resolve the conflicts sequentially and thus they only need to consider the conflicts that arise in the current partial solution and therefore the number of constrains and variables necessary to prevent the conflicts stays limited.

[1] This paper is not officially published, only a pre-print was available.

Figure 2.1
Openbus DISPLIB competition poster

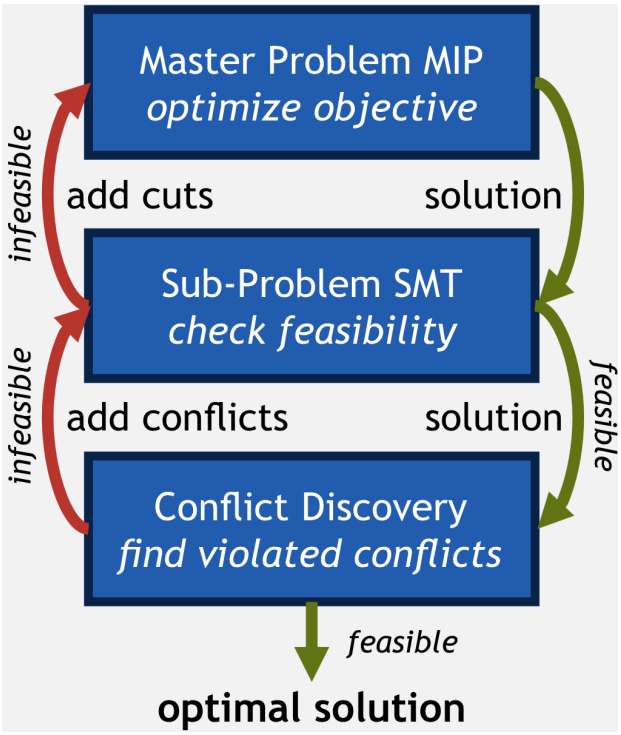

Source: ETH Zürich Research Collection (Dubach et al., 2025a)

2.2 Theory and heuristics

While the *DISPLIB* winning solutions provided us with the ideas of aggregation of variables and combining conflict resolutions, it provided very little on the actual implementation. This section descibes the relevant sources to explain the necessary theory to model the problem effectively.

Referenced by the winning solution is *A Branch and Bound Algorithm for Scheduling Trains in a Railway Network* (D'Ariano et al., 2007). It uses an alternative graph formulation for the train scheduling problem. With this representation we can model resouce conflicts with alternative precedence arcs. It also describes the idea of inferred selection, meaning that by choosing one precence alternative for a resource implies selection on another resources (the alternative is forbidden as it would produce an infeasible solution).

Job-shop Scheduling with Blocking and No-wait Constraints (Mascis & Pacciarelli, 2002) introduces the alternative graph concept as a generalization of the disjunctive graph (Roy & Sussmann, 1964). The alternative graph is used to formulate a model for the blocking job-shop problem (BJSP) that is closely related to TDP.

Improving Real-Time Train Dispatching: Models, Algorithms and Applications. (D'Ariano, 2008, p. 84-85) provides static implication rules for the alternative graph representation that

can be used for inferred selection based on the structure of TDP.

Railway scheduling problems and their decomposition (Strotmann, 2007) is thesis that show decomposition techniques that inspired the decomposition used in this thesis to split the global problem into small subgraphs using border operations and a global synchronizer to merge the solution from these subgraphs and deal with potention conflicts.

2.3 State of the art

Because the description of the solutions that are directly connected to this thesis is limited, we provide the reader with an overview of the recent state of the art solutions for closely related problems in train dispatching and scheduling.

Optimizing train dispatching for the Union Pacific Railroad (Boccia et al., 2025) presents an automated dispatching system that is in use on a real rail network. It uses a decomposition of the problem and global synchronizer to resolve conflict. It is a prime example how optimization can improve real-life solutions.

A Branch-and-Cut Algorithm for Scheduling Train Platoons in Urban Rail Networks (Chai et al., 2024) describes a mixed-integer linear problem (MILP) for scheduling of train platoons, problem where different vehicles are flexibly and dynamically coupled and decoupled.

Authors in *Decentralised Multi-Agent Coordination for Real-Time Railway Traffic Management* (D'Amato et al., 2025) propose the use of another emerging idea - instead of central or area based decomposition schedulers, trains cooperate as separate agents to prevent conflicts and achieve efficient scheduling. This decentralized nature of cooperation has already been used on drone related problems with success (Hert et al., 2023).

3. Theoretical background

This chapter will cover the necessary theory used to formulate and solver our problem. Main focus will be on graph topology and alternative graphs and their relation to the train dispatching problem.

3.1 Basic definitions

While some of these definitions may feel redundant, we will use them as an opportunity to establish the notation. Most of the definitions are paraphrased from *Handbook of Graph Theory* (Gross et al., 2013) with notation adjusted to ours.

Definition 3.1. Graph is an ordered pair $G = (V, E)$, where $V = \{v_i\}_{i=1}^{n_v}$ is a set vertices [1] and $E = \{e_i\}_{i=0}^{n_e}$ is a set of edges, where edge $e = \{u, v\}$, $u, v \in V$ is an *unordered* pair of vertices.

Definition 3.2. Directed graph (digraph) is an ordered pair $G = (V, E)$, where $V = \{v_i\}_{i=1}^{n_v}$ is a set vertices and $E = \{e_i\}_{i=0}^{n_e}$ is a set of edges [2], where edge $e = (u, v)$, $u, v \in V$ is an *ordered* pair of vertices.

Definition 3.3. Multigraph is an ordered tuple $G = (V, E, r)$, where $V = \{v_i\}_{i=1}^{n_v}$ is a set vertices, $E = \{e_i\}_{i=0}^{n_e}$ is a set of edges and $r: \ E \to \{\{u, v\} \mid u, v \in V\}$ is a mapping from edges to pair of endpoint vertices.

Definition 3.4. Directed multigraph is an ordered tuple $G = (V, E, s, t)$, where $V = \{v_i\}_{i=1}^{n_v}$ is a set vertices, $E = \{e_i\}_{i=0}^{n_e}$ is a set of edges and $s: \ E \to V$ is a source (start) mapping from edges to vertices and $t: \ E \to V$ is a target (end) mapping from edges to vertices.

Example of each type of graph is in figure 3.1.

Remark. As you can see in figure 3.1, digraph allows for parallel edges (2, 3) and (3, 2). This will be a useful property for the alternative graph definition.

Since we will mostly be working with directed graph, to following definitions are tailored for directed graphs. The following definitions of operators also abuse the notation by ommiting the specification of graph G, which will be included in the context of multiple graphs if necessary.

Definition 3.5. Source (start) $\mathrm{s}(e) = u$, $e = (u, v)$ is the starting vertex of edge e.

Definition 3.6. Target (end) $\mathrm{t}(e) = v$, $e = (u, v)$ is the ending vertex of edge e.

[1] Vertices are often called nodes.

[2] Commonly the edges in directed graphs are called arcs.

Figure 3.1
Example of graph (A), digraph (B), multigraph (C) and directed multigraph (D)

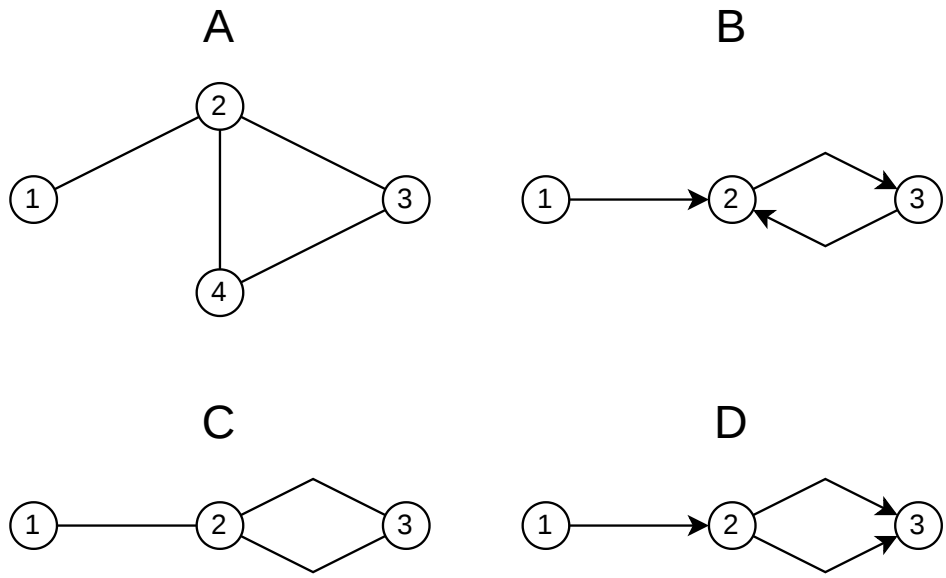

Definition 3.7. Incomming edges $\delta_{\text{in}}(v) = \{e \mid t(e) = v,\, e \in E\}$ of vertex v is a set of edges e that end in v.

Definition 3.8. Outgoing edges $\delta_{\text{out}}(v) = \{e \mid s(e) = v,\, e \in E\}$ of vertex v is a set of edges e that start in v.

Definition 3.9. Predecessors (In-neighborhood) $\mathrm{N}_{\text{in}}(v) = \{u \mid u = \mathrm{s}(e),\, e \in \delta_{\text{in}}(v)\}$ of vertex v is a set of vertices u that are connect to v via its incomming edges.

Definition 3.10. Successors (Out-neighborhood) $\mathrm{N}_{\text{out}}(v) = \{w \mid w = \mathrm{t}(e),\, e \in \delta_{\text{out}}(v)\}$ of vertex v is a set of vertices w that are connect to v via its outgoing edges.

Definition 3.11. In-degree $\mathrm{d}_{\text{in}}(v) = |\,\delta_{\text{in}}(v)|$ is the number of incomming edges of v.

Definition 3.12. Out-degree $\mathrm{d}_{\text{in}}(v) = |\,\delta_{\text{out}}(v)|$ is the number of incomming edges of v.

Definition 3.13. Path is $P = \mathrm{P}(u,\, v)$ from u to v is a sequence of edges $(e_i)_{i=1}^{N}$, such that $\mathrm{t}(e_{i-1}) = \mathrm{s}(e_i)$, $2 \leq i \leq n$, $u = src(e_0)$ and $v = \mathrm{t}(e_n)$.

Definition 3.14. Cycle is a path that starts and ends in the same vertex.

3.2 Graph topology

Definition 3.15. Directed acyclic graph (DAG) is directed graph that contains no cycle.

Definition 3.16. Topological order is a sequence of vertices in directed graph $(v_i)_{i=1}^{|V|}$ such that $e = (u, v) \implies u \prec v$ (u apears before v in the sequence).

Theorem 3.1. Topological order can only be created for acyclic graphs.

Proof. By contradiction, for path starting at u and ending at v, $u \prec v$ in the topological order, because for each $e = (x, y)$ in path, $x \prec y$ and ordering $\prec$ is transitive. For cycle u and v are in the same spot in the order, this is a contradiction. □

To detect a cycle and get a topological sort we use algorithm 3.1, it is acombination for depths first search (DFS) for cycle detection and DFS for topological sorting (Cormen et al., 2022). It runs in $O(|V| + |E|)$ time complexity with $O(|V|)$ required space. It allows us to do both cycle detection and topological sort in one pass of DFS.

3.3 Alternative graphs

Alternative graphs were introduced in (Mascis & Pacciarelli, 2002). The provide a very useful framework for modeling resource allocation problems with blocking. They are a generalization of disjunctive graphs (Roy & Sussmann, 1964).

Definition 3.17. Alternative graph is an ordered tuple $G = (V, E, A)$, where $V = \{v_i\}_{i=1}^{n_v}$ is a set vertices, $E = \{e_i\}_{i=0}^{n_e}$ is a set edges $e = (u, v)$, $u, v \in V$, and $A = \{a_i\}_{i=0}^{n_a}$ is a set of disjunctive (alternative) edge pairs $a = ((u, v), (x, y))$, $u, v, x, y \in V$.

Remark. We denote the alternative $\bar{e}$ to the edge e from the disjunctive pair $a = (e, \bar{e})$.

To illustrate the concept of alternative graphs, figure 3.2 shows an altertative graph with 3 disjunctive pairs.

Figure 3.2
Example of alternative graph

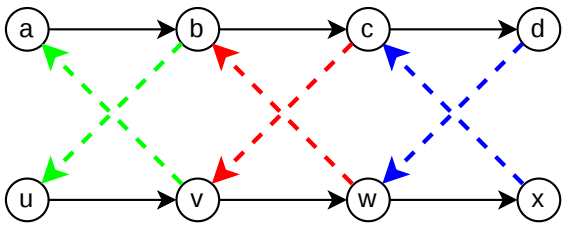

Definition 3.18. A selection S is a set of edges obtained by from A by choosing at most one edge from each pair. The edges in this selection are selected, their alternatives (the other edge from the pair) is forbidden.

Definition 3.19. Selection S is complete if exactly one edges is chosen from each pair, otherwise its a partial selection.

Algorithm 3.1

Topological sort with cycle detection

```
input: graph G
output: () if G contains cycle else topological order of G

function: DFS(v, label, stack)
  if label(v) is InRecursion
    return true
  else if label(v) is Done
    return false
  end

  label(v) ← InRecursion

  foreach s ∈ N_out(v)
    if DFS(s, label, stack)
      return true
    end
  end

  stack.push(v)
  label(v) ← Done

  return false
end

begin
  foreach v ∈ V(G)
    label(v) ← NotDone
  end

  stack ← EmptyStack

  foreach v ∈ V(G)
    if DFS(v, label, stack)
      return ()
    end
  end

  order ← reverse(stack)
  return order
end
```

Definition 3.20. Selection S is consistent if graph $(V, E \cup S)$ does not contain a cycle. If the graph does contain a cycle, the selection is inconsistent.

To illustrate the selection terms, figure 3.3 shows different types of selections from on alternative graph from figure 3.2.

Figure 3.3
Examples for partial inconsistent (A), partial consistent (B), complete inconsistent (C), and complete consistent (D) selections

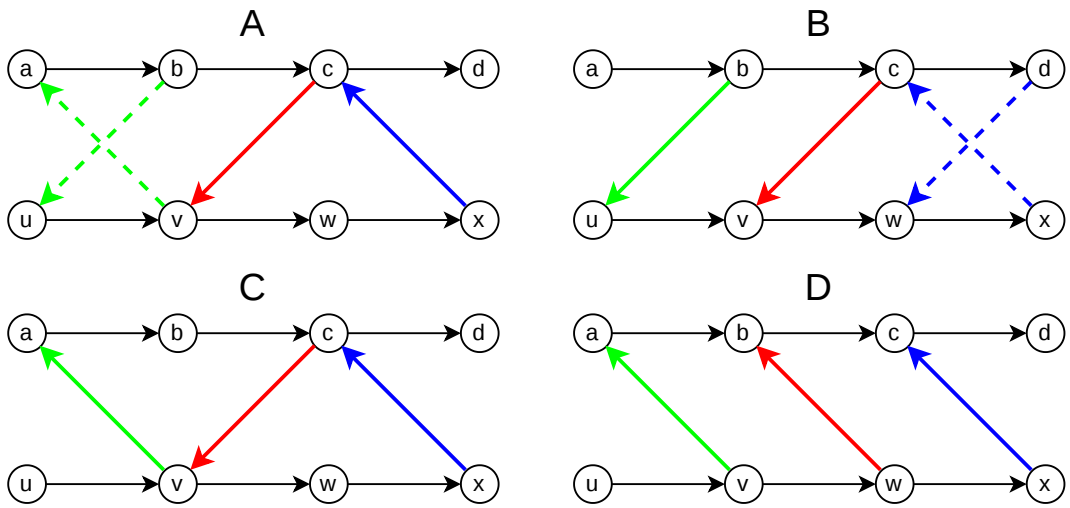

Definition 3.21. Alternative edge e is inferred from selection S, $S \vdash e$ if $S \cup \{\bar{e}\}$ is an inconsistent selection, meaning that the choice of e from altertative pair $(e, \bar{e})$ can be inferred from S because choosing $\bar{e}$ would be inconsistent. Similarly we can say that one alternative edge x implies another y, $x \implies y$ if $\{x\} \vdash y$.

An example from on graphs in figure 3.2, we can see that $(b, u) \implies (c, v)$ and $(v, a) \implies (w, b)$ etc.

Remark. It is possible to have a partial consistent selection P for which there exist no complete consistent complete selection C, $P \subset C$. One such case is in figure 3.4, where $(b, u) \implies (c, v)$ and $(x, c) \implies (w, b)$. Beacuse (c, v) and (w, b) are in the same disjunctive pair, we cannot make a consistent selection for this pair.

3.3.1 Weighted graphs

To extend the descriptive ability of graphs to model problems we assign properties to vertices or edges. One of the most common one is to add weights to edges.

Figure 3.4
Examples of partial consistent selection without possible complete consistent selection

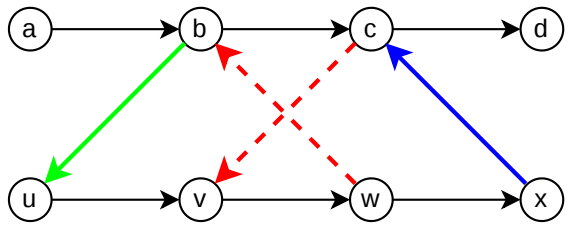

Definition 3.22. Weighted directed graph is an ordered tuple $G = (V, E, w)$, where V and E are same as in digraph definition 3.2, and $w : E \to \mathbb{R}$ is an edge weight mapping.

Definition 3.23. Length $\mathrm{L}(\cdot)$ of path P is the sum of the weights for each edge,

$$\mathrm{L}(P) = \sum_{e \in P} w_e \tag{3.1}$$

Definition 3.24. Length of the longest path $\mathrm{L}_{\max}(\cdot)$ from u to v is

$$\mathrm{L}_{\max}(u, v) = \max_{P \in \mathcal{P}_{u,v}} \mathrm{L}(P), \tag{3.2}$$

where $\mathcal{P}_{u,v}$ is the set of all paths from u to v.

Remark. Length of the longest path can only be calculated for a graph without any positive length cycles, otherwise we could simple go in the cycle indefinitely to prolong the path.

For our model, the weight of an edge will be coresponding to a minimal duration between events. We can construct an event graph like in figure 3.5 where each vertex is an event, with origin o as the start and each edges weight defines minimal duration between the events.

The time of the event x in the even graph can be calculate as the longest path from origin o to x, $\mathrm{T}(x) = \mathrm{L}_{\max}(o, x)$.

Finding all of the paths from o to each $x \in V$ would be very expensive, by DFS the complexity is exponential (Homer & Selman, 2011).

First optimization is the use of Bellman principle (Light, 2024)(Bellman, 1952),

$$\mathrm{T}(v) = \mathrm{L}_{\max}(o, v) = \max_{u \in \mathrm{N}_{\mathrm{in}}(v)} \mathrm{L}_{\max}(o, u) + w_{(u,\ v)}. \tag{3.3}$$

This is principle is used by the Floyd-Warshall algorithm (Floyd, 1962) and Dijkstra's algorithm (Dijkstra, 1959) which are used for finding shortest paths for all pairs for vertices and from a select starting vertex respectively. Both of them could be adjusted to find the longest

Figure 3.5
Examples of event graph for 3 trains with shared resources

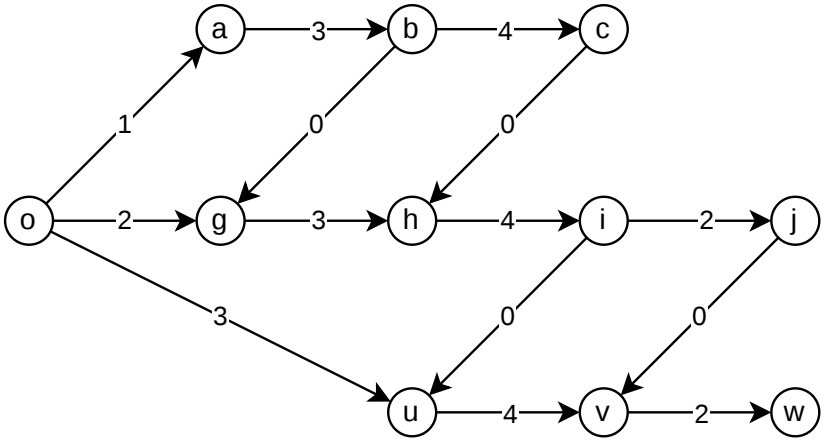

path within polynomial complexity, $\mathrm{O}(|V|^3)$ for Floyd-Warshall and $\mathrm{O}((|V|+|E|)log|V|)$ for Dijkstra with binary heap.

Since we already use algorithm 3.1 to detect a cycle, we can just process the time of the nodes in the topological order.

Definition 3.25. Critical path $\mathrm{CP}(\cdot)$ for vertex v is the longest path from origin o to v.

Critical path is limiting the earliest start of event v, delaying any event along this path will also delay the event v,

$$\mathrm{L}(\mathrm{CP}(v)) = \mathrm{T}(v). \tag{3.4}$$

Definition 3.26. Critical path edge $\mathrm{CPE}(\cdot)$ of v is the last edge of the critical path for v.

We can again use the Bellman principle to reconstruct the critical path,

$$\mathrm{CP}(v) = \mathrm{CP}(u) \cup \{(u,\, v)\},\ \mathrm{CPE}(v) = (u,\, v). \tag{3.5}$$

Algorithm 3.2 outputs the time $\mathrm{T}(\cdot)$ and critical path edge $\mathrm{CPE}(\cdot)$ for each vertex in the event graph. It runs in $\mathrm{O}(|V|+|E|)$ time complexity.

Remark. In our event graph, the first vertex in the topological order will always be the origin o as it is the only vertex v with $\mathrm{d_{in}}(v) = 0$.

Example For event graph in figure 3.5, the time and critical path edge output from algorithm 3.2 is in table 3.1. So the vertices in the critical path for a are (o, a, b, c), for j are (o, a, b, c, h, i, j) and for w are (o, a, b, c, h, i, u, v, w).

Algorithm 3.2

Time and critical path predecessor calculation

```
input: weighted graph G, topological order O
output: time T and critical path edge CPE for each vertex in G

begin
  foreach v ∈ V(G)
    T(v) ← 0
    CPE(v) ← Undefined
  end

  foreach u ∈ O \ {o}
    foreach (u, v) ∈ δ_out(u)
      if T(v) < T(u) + w_{u,v}
        T(v) ← T(u) + w_{u,v}
        CPE(v) ← (u, v)
      end
    end
  end
end
```

Table 3.1

Time and critical path edge for vertices in example from figure 3.5

vertex	T	CPE
a	1	(o, a)
b	4	(a, b)
c	8	(b, c)
g	4	(b, g)
h	8	(c, h)
i	12	(h, i)
j	14	(i, j)
u	12	(i, u)
v	16	(u, v)
w	18	(v, w)

References

Barbato, M., Bertoncini, A., Bianchessi, N., Tomasaz, A. B., Ceselli, A., Cordone, R., Ostuni, D., Premoli, M., Righini, G., Simone, S., & Trubian, M. (2025). Optimization and Decision Science Conference 2025: Book of Abstacts. https://www.airoconference.it/ods2025/images/docs/ODS25_AbstractBook.pdf

Bellman, R. (1952). On the theory of dynamic programming. *Proceedings of the National Academy of Sciences of the United States of America*, *38*(8), 716–719. Retrieved April 3, 2026, from http://www.jstor.org/stable/88493

Boccia, M., Sasso, V. D., Lamorgese, L., Mannino, C., & Ventura, P. (2025). Optimizing train dispatching for the union pacific railroad. https://arxiv.org/abs/2503.19535

Cormen, T. H., Leiserson, C. E., Rivest, R. L., & Stein, C. (2022). *Introduction to algorithms* (4th). MIT Press.

D'Amato, L., Pellegrini, P., & Trianni, V. (2025). Decentralised multi-agent coordination for real-time railway traffic management. https://arxiv.org/abs/2502.08324

D'Ariano, A. (January 2008). Improving Real-Time Train Dispatching: Models, Algorithms and Applications.

D'Ariano, A., Pacciarelli, D., & Pranzo, M. (2007). A Branch and Bund Algorithm for Scheduling Trains in a Railway Network. *European Journal of Operational Research*, *183*(2), 643–657. https://doi.org/https://doi.org/10.1016/j.ejor.2006.10.034

Dijkstra, E. W. (1959). A note on two problems in connexion with graphs. *Numerische Mathematik*, *1*(1), 269–271. https://doi.org/10.1007/BF01386390

Dubach, T., Fuchs, F., Lordieck, J., Corman, F., & Martin-Iradi, B. (2025a). DISPLIB competition poster. https://www.research-collection.ethz.ch/server/api/core/bitstreams/d9c3acc3-5388-4ee2-b34a-dae5946f9224/content

Dubach, T., Fuchs, F., Lordieck, J., Corman, F., & Martin-Iradi, B. (January 2025b). Handling Conflicts in Microscopic Railway Timetabling at Scale: A Hybrid Approach. https://doi.org/10.2139/ssrn.5761246

Floyd, R. W. (June 1962). Algorithm 97: Shortest path. *Commun. ACM*, *5*(6), 345. https://doi.org/10.1145/367766.368168

Gross, J. L., Yellen, J., & Zhang, P. (2013). *Handbook of graph theory* (2nd). CRC Press.

Hert, D., Baca, T., Petracek, P., Kratky, V., Penicka, R., Spurny, V., Petrlik, M., Vrba, M., Zaitlik, D., Stoudek, P., Walter, V., Stepan, P., Horyna, J., Pritzl, V., Sramek, M., Ahmad, A., Silano, G., Bonilla Licea, D., Stibinger, P., … Saska, M. (July 2023). Mrs drone: A modular platform for real-world deployment of aerial multi-robot systems. *Journal of Intelligent & Robotic Systems*, *108*, 1–34. https://doi.org/10.1007/s10846-023-01879-2

Homer, S., & Selman, A. L. (2011). *Computability and complexity theory*. Springer Science & Business Media.

Chai, S., Yin, J., D'Ariano, A., Liu, R., Yang, L., & Tang, T. (March 2024). A Branch-and-Cut Algorithm for Scheduling Train Platoons in Urban Rail Networks. *Transportation*

Research Part B: Methodological, *181*, 102891. https://doi.org/10.1016/j.trb.2024.102891

Kloster, O., Luteberget, B., Mannino, C., & Sartor, G. (2025). DISPLIB: A Library of Train Dispatching Problems. https://arxiv.org/abs/2509.12254

Leutwiler, F., & Corman, F. (February 2022). A Logic-Based Benders Decomposition for Microscopic Railway Timetable Planning. *European Journal of Operational Research*, *303*. https://doi.org/10.1016/j.ejor.2022.02.043

Light, B. (2024). The principle of optimality in dynamic programming: A pedagogical note. https://arxiv.org/abs/2302.08467

Mascis, A., & Pacciarelli, D. (2002). Job-Shop Scheduling with Blocking and No-Wait Constraints. *European Journal of Operational Research*, *143*(3), 498–517. https://doi.org/https://doi.org/10.1016/S0377-2217(01)00338-1

Roy, B., & Sussmann, B. (1964). *Les problèmes d'ordonnancement avec contraintes disjonctives* (Note D.S. No. 9 bis). Direction Scientifique SEMA. Paris, France.

Strotmann, C. (2007). *Railway Scheduling Problems and their Decomposition* [Doctoral dissertation, University of Osnabrück] [Dissertation im Fachbereich Mathematik/Informatik]. https://uni-osnabrueck.de