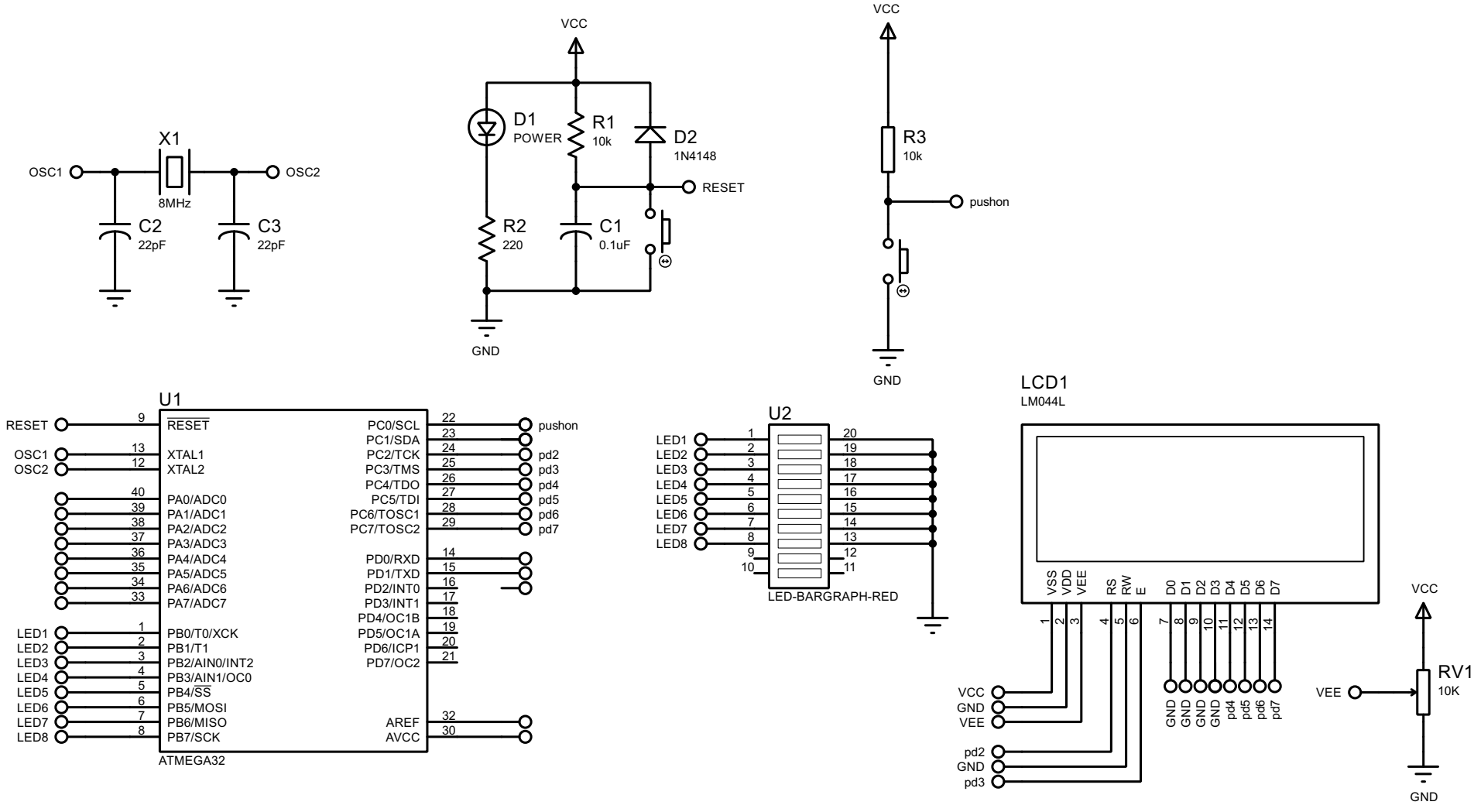
X1
OSC1
OSC2
8MHz
C2
22pF
C3
22pF
VCC
D1
POWER
R1
10k
D2
1N4148
RESET
R2
220
C1
0.1uF
GND
VCC
R3
10k
pushon
GND
U1
RESET
OSC1
OSC2
XTAL1
XTAL2
PA0/ADC0
PA1/ADC1
PA2/ADC2
PA3/ADC3
PA4/ADC4
PA5/ADC5
PA6/ADC6
PA7/ADC7
LED1
LED2
LED3
LED4
LED5
LED6
LED7
LED8
PB0/T0/XCK
PB1/T1
PB2/AIN0/INT2
PB3/AIN1/OC0
PB4/SS
PB5/MOSI
PB6/MISO
PB7/SCK
ATMEGA32
PC0/SCL
PC1/SDA
PC2/TCK
PC3/TMS
PC4/TDO
PC5/TDI
PC6/TOSC1
PC7/TOSC2
PD0/RXD
PD1/TXD
PD2/INT0
PD3/INT1
PD4/OC1B
PD5/OC1A
PD6/ICP1
PD7/OC2
AREF
AVCC
pushon
pd2
pd3
pd4
pd5
pd6
pd7
U2
LED-BARGRAPH-RED
LCD1
LM044L
VSS
VDD
VEE
RS
RW
E
D0
D1
D2
D3
D4
D5
D6
D7
VCC
GND
VEE
pd2
GND
pd3
GND
GND
GND
GND
pd4
pd5
pd6
pd7
VEE
RV1
10K
VCC
GND