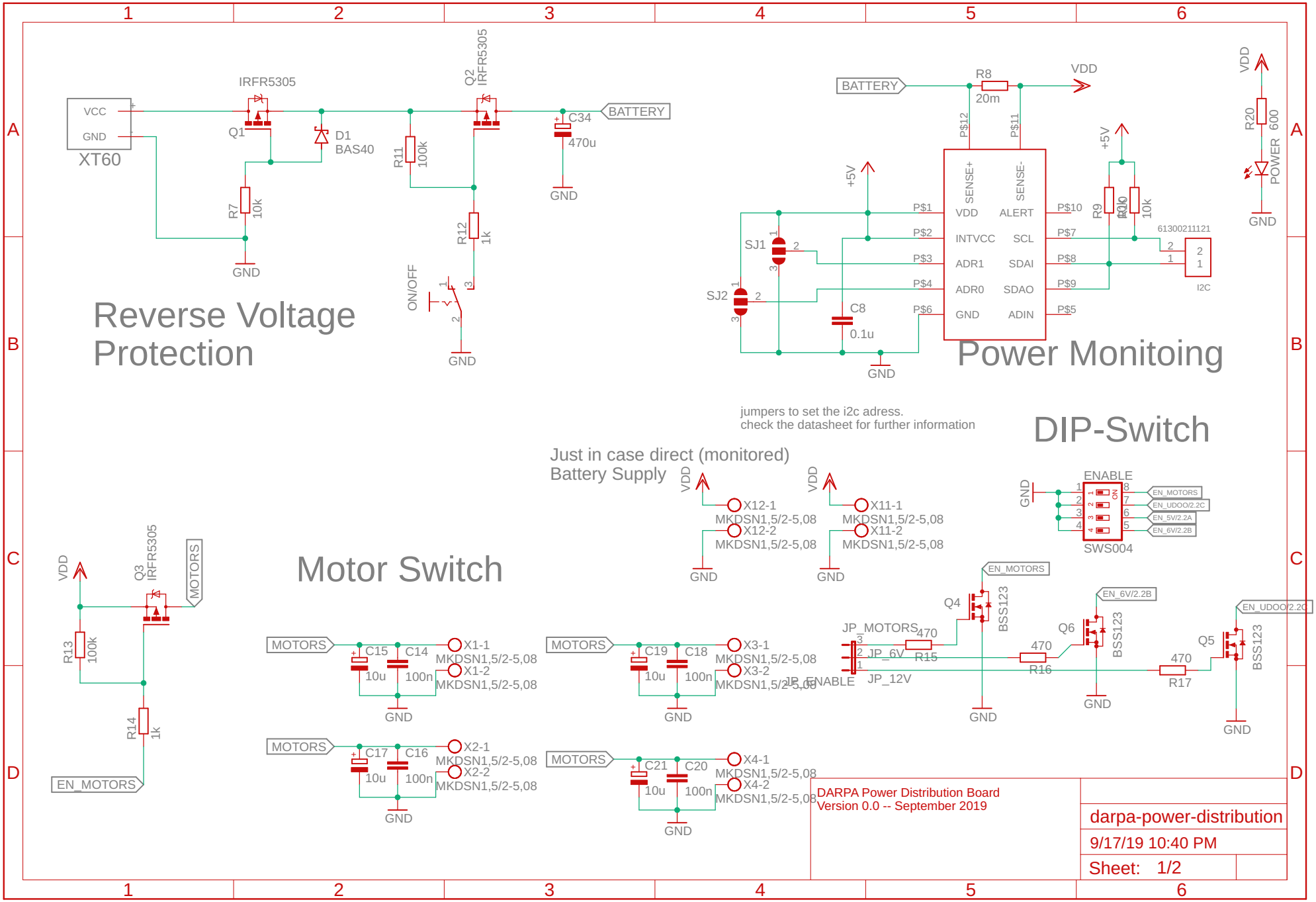
Reverse Voltage Protection
XT60
VCC
GND
IRFR5305
Q1
D1
BAS40
R7
10k
R11
100k
Q2
IRFR5305
R12
1k
ON/OFF
C34
470u
BATTERY
Power Monitoing
R8
20m
VDD
P$12
P$11
SENSE+
SENSE-
VDD
ALERT
INTVCC
SCL
ADR1
SDAI
ADR0
SDAO
GND
ADIN
P$1
P$2
P$3
P$4
P$6
P$10
P$7
P$8
P$9
P$5
+5V
SJ1
SJ2
C8
0.1u
R9
10k
6130211121
I2C
R20
600
POWER
jumpers to set the i2c adress.
check the datasheet for further information
DIP-Switch
ENABLE
SWS004
EN_MOTORS
EN_UDOO/2.2C
EN_5V/2.2A
EN_6V/2.2B
Just in case direct (monitored)
Battery Supply
X12-1
X12-2
X11-1
X11-2
MKDSN1,5/2-5,08
Motor Switch
Q3
IRFR5305
MOTORS
R13
100k
R14
1k
C15
C14
C17
C16
C19
C18
C21
C20
10u
100n
X1-1
X1-2
X2-1
X2-2
X3-1
X3-2
X4-1
X4-2
Q4
BSS123
Q6
Q5
JP_MOTORS
JP_6V
JP_12V
JP_ENABLE
R15
R16
R17
470
DARPA Power Distribution Board
Version 0.0 -- September 2019
darpa-power-distribution
9/17/19 10:40 PM
Sheet: 1/2