Computer Architecture (CS F342) LAB

Single Cycle Processor Design

Exp 5-6

BITS Pilani
Hyderabad Campus

Prof. S. Gurunarayanan

Introduction

- In the previous lab, we have designed an Arithmetic Logic Unit (ALU).
- Next, we designed the control unit of a MIPS ALU.
- In this lab, we will we will learn basics of a single-cycle processor design.
- We will also learn the design process of an instruction unit and register unit in MIPS processor.
- Finally, we will demonstrate the working of R format and I format instructions for the designed processor units.

Single cycle processor basics

- Each instruction takes 1 clock cycle.
- The clock cycle value is equal to the execution time of the slowest instruction.
- Separate instruction and data memory.
- Only as fast as slowest instruction.
- Simple design logic

Steps in program execution

- Instruction fetch: Use address in Program Counter (PC) to fetch the current instruction from instruction memory.
- Instruction decode: Determine the opcode, source, destination registers, etc., within the instruction.
- Instruction execute: Perform the operation specified by the instruction.
- PC Update: The PC value is incremented to hold the address of the next instruction. PC is incremented as PC+4 because MIPS instructions are word-aligned.

Major components in MIPS processor

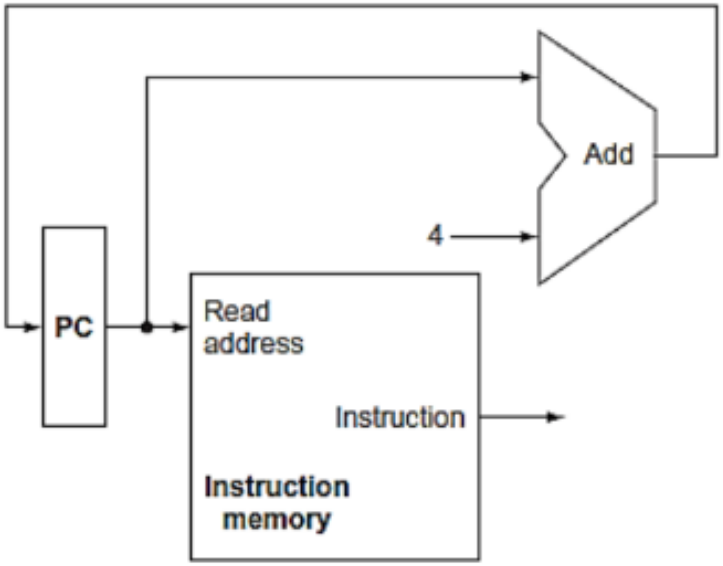

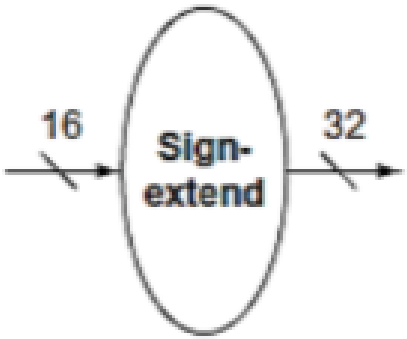

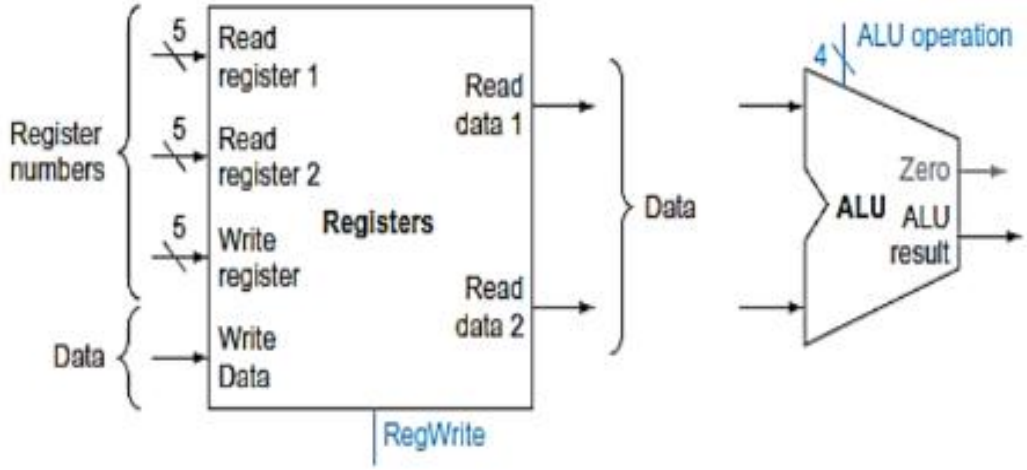

Major components in MIPS processor

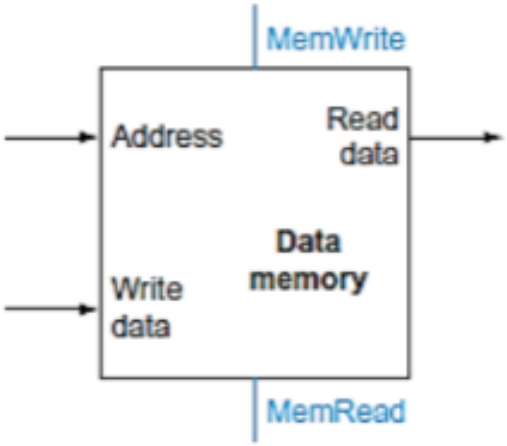

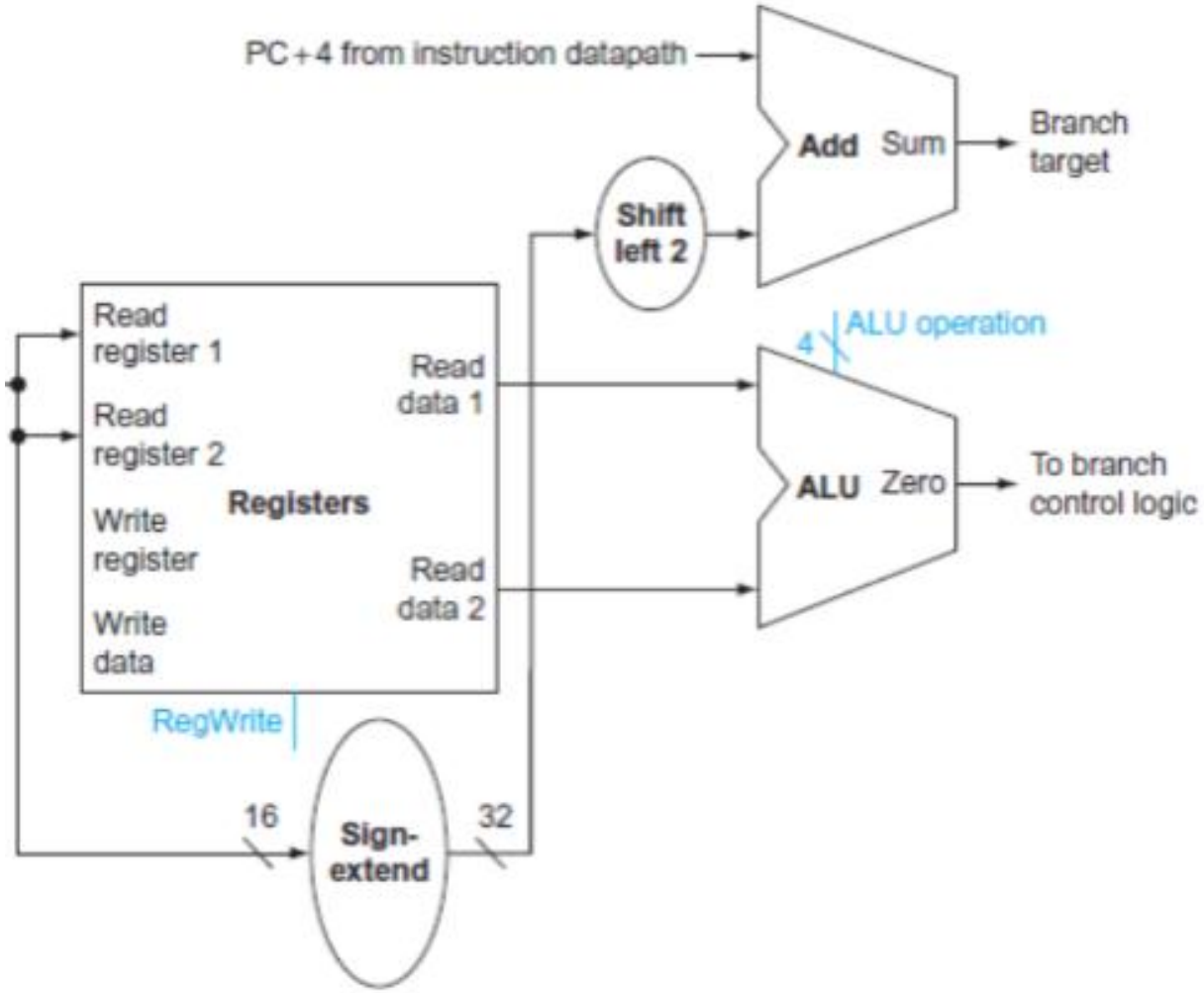

Datapath design steps - R format

- Get instruction address from PC
- Fetch instruction from the instruction memory.
- Decode instruction
- Pass rs, rt, into read register and rd into write register arguments.
- Retrieve data from read register 1 and read register 2 (rs and rt).
- Pass register contents into the ALU as operands of the operation to be performed.
- Retrieve the result of ALU and pass it back as the write data argument of the register file.
- Increment PC

Datapath design steps - I format

- Get instruction address from PC
- Fetch instruction from the instruction memory.
- Decode instruction
- Pass rs into read register and rd into write register arguments.
- Retrieve data from read register 1.
- Sign extend the 16-bit offset value to 32-bit.
- Pass contents of rs and sign extended value into the ALU.
- Retrieve the result of ALU and pass it back as the write data argument of the register file.
- If it is a load/store operation, the ALU output will be used to access the location in data memory.
- Increment PC

Datapath design steps - Branch

- The branch datapath must do two operations: compute the branch target address and compare the register contents.
- Get instruction address from PC
- Fetch instruction from the instruction memory and decode it.
- Pass rs, rt into read register arguments.
- Retrieve data from read register 1 and read register 2.
- Sign extend the 16-bit offset to 32-bit and left-shift it by 2 and add PC+4 to it, which gives the branch target.
- Pass contents of rs and rt into the ALU and increment PC.
- Pass the branch target value and PC + 4 value into mux.
- Pass the ALU zero output and branch control signal to an AND gate. This output of the AND gate will act as the select signal of the mux.
- If zero output is true, branch address will be the new PC else, PC+4 will be the new PC.

Datapath Design

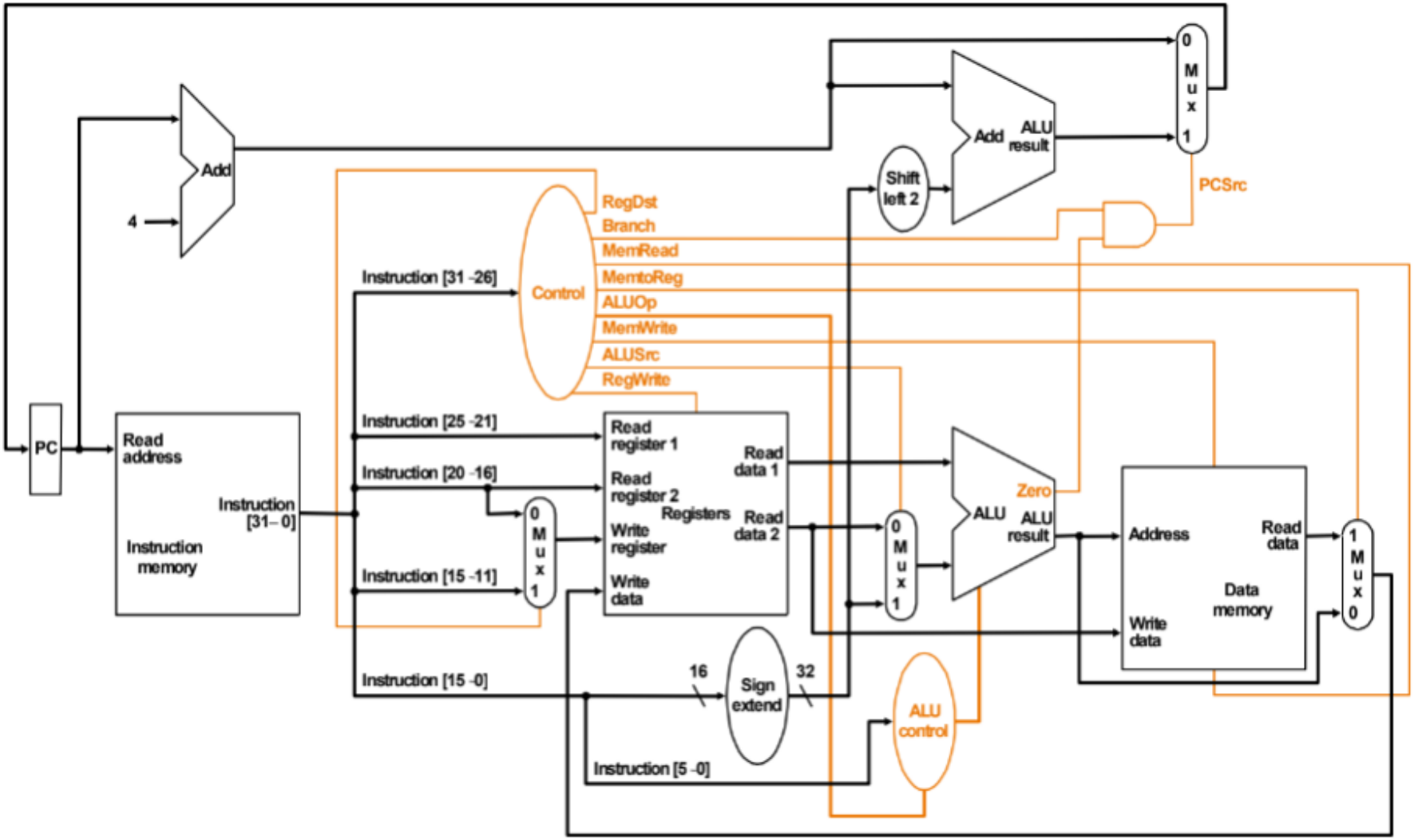

In Lab Exercises

1. Design a single cycle processor for the following instructions
   - OR reg3, reg1, reg2
   - SUBI reg4, reg5, 21
   - SW reg6, 5 (reg7)
   - BEQ reg9, reg8, 7

Note: Initially, design the processor to support only OR and SUBI instructions. Once it is verified, modify the processor design for SW and BEQ instructions.

This can be done in two lab sessions put together (5&6)