Control

- Control unit takes input from
  - the instruction opcode bits
- Control unit generates
  - ALU control input
  - write enable (possibly, read enable also) signals for each storage element
  - selector controls for each multiplexor

ALU Control

- Plan to control ALU: main control sends a 2-bit ALUOp control field to the ALU control. Based on ALUOp and funct field of instruction the ALU control generates the 3-bit ALU control field

- ALU must perform
  - *add* for load/stores
  - *sub* for branches
  - one of *and*, *or*, *add*, *sub*, *slt* for R-type instructions, depending on the instruction's 6-bit funct field

ALU Control

- Plan to control ALU: main control sends a 2-bit ALUOp control field to the ALU control. Based on ALUOp and funct field of instruction the ALU control generates the 3-bit ALU control field

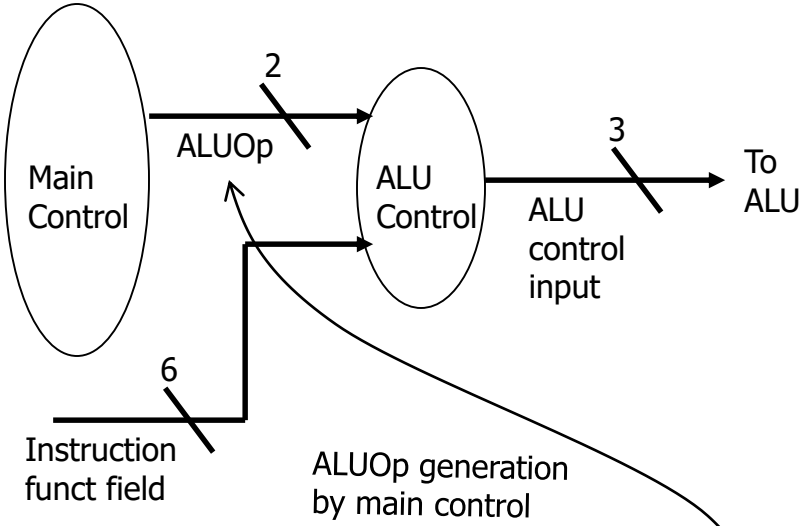

- ALU must perform
  - *add* for load/stores (ALUOp 00)
  - *sub* for branches (ALUOp 01)
  - one of *and*, *or*, *add*, *sub*, *slt* for R-type instructions, depending on the instruction's 6-bit funct field (ALUOp 10)

ALU Control

- Plan to control ALU: main control sends a 2-bit ALUOp control field to the ALU control. Based on ALUOp and funct field of instruction the ALU control generates the 3-bit ALU control field

ALU control field	Func-tion
000	and
001	or
010	add
110	sub
111	slt

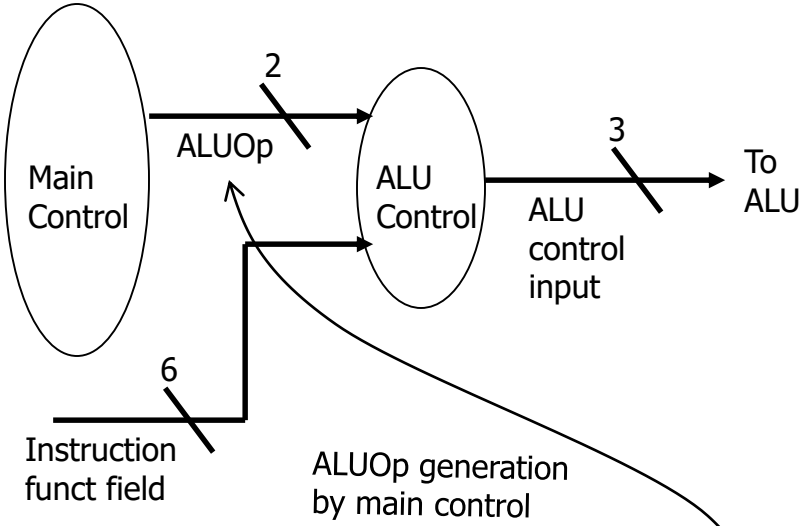

- ALU must perform
  - *add* for load/stores (ALUOp 00)
  - *sub* for branches (ALUOp 01)
  - one of *and*, *or*, *add*, *sub*, *slt* for R-type instructions, depending on the instruction's 6-bit funct field (ALUOp 10)

Setting ALU Control Bits

Instruction opcode	AluOp	Instruction operation	Funct Field	Desired ALU action	ALU control input
LW	00	load word	xxxxxx	add	010
SW	00	store word	xxxxxx	add	010
Branch eq	01	branch eq	xxxxxx	subtract	110
R-type	10	add	100000	add	010
R-type	10	subtract	100010	subtract	110
R-type	10	AND	100100	and	000
R-type	10	OR	100101	or	001
R-type	10	set on less	101010	set on less	111

ALUOp		Funct field						Operation
ALUOp1	ALUOp0	F5	F4	F3	F2	F1	F0	
0	0	X	X	X	X	X	X	010
0	1	X	X	X	X	X	X	110
1	X	X	X	0	0	0	0	010
1	X	X	X	0	0	1	0	110
1	X	X	X	0	1	0	0	000
1	X	X	X	0	1	0	1	001
1	X	X	X	1	0	1	0	111

Truth table for ALU control bits

Implementation: ALU Control Block

ALUOp		Funct field						Operation
ALUOp1	ALUOp0	F5	F4	F3	F2	F1	F0	
0	0	X	X	X	X	X	X	010
0	1	X	X	X	X	X	X	110
1	X	X	X	0	0	0	0	010
1	X	X	X	0	0	1	0	110
1	X	X	X	0	1	0	0	000
1	X	X	X	0	1	0	1	001
1	X	X	X	1	0	1	0	111

Truth table for ALU control bits

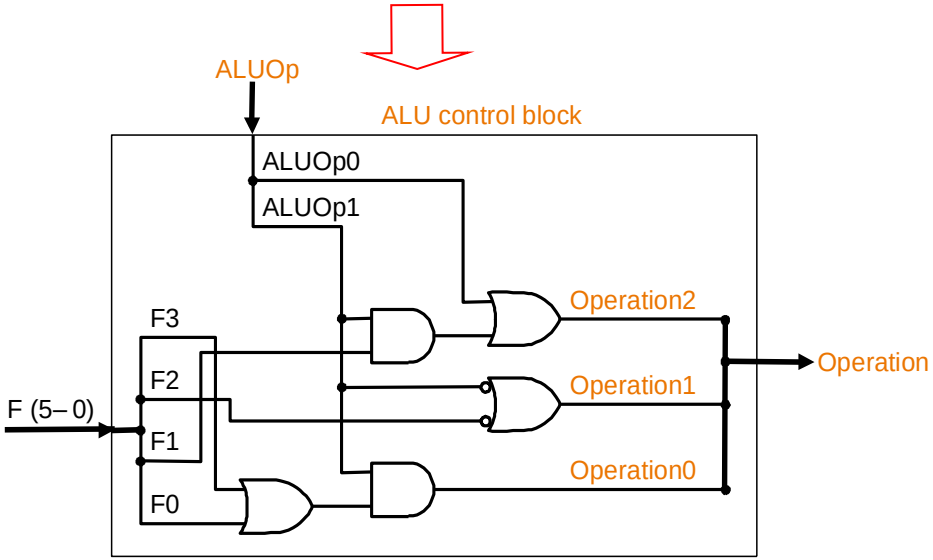

ALU control logic

Designing the Main Control

R-type	opcode	rs	rt	rd	shamt	funct
	31-26	25-21	20-16	15-11	10-6	5-0

Load/store or branch	opcode	rs	rt	address
	31-26	25-21	20-16	15-0

- Observations about MIPS instruction format
  - opcode is always in bits 31-26
  - two registers to be read are always rs (bits 25-21) and rt (bits 20-16)
  - base register for load/stores is always rs (bits 25-21)
  - 16-bit offset for branch equal and load/store is always bits 15-0
  - destination register for loads is in bits 20-16 (rt) while for R-type instructions it is in bits 15-11 (rd) (*will require multiplexor to select*)

The Main Control Unit

- Control signals derived from instruction

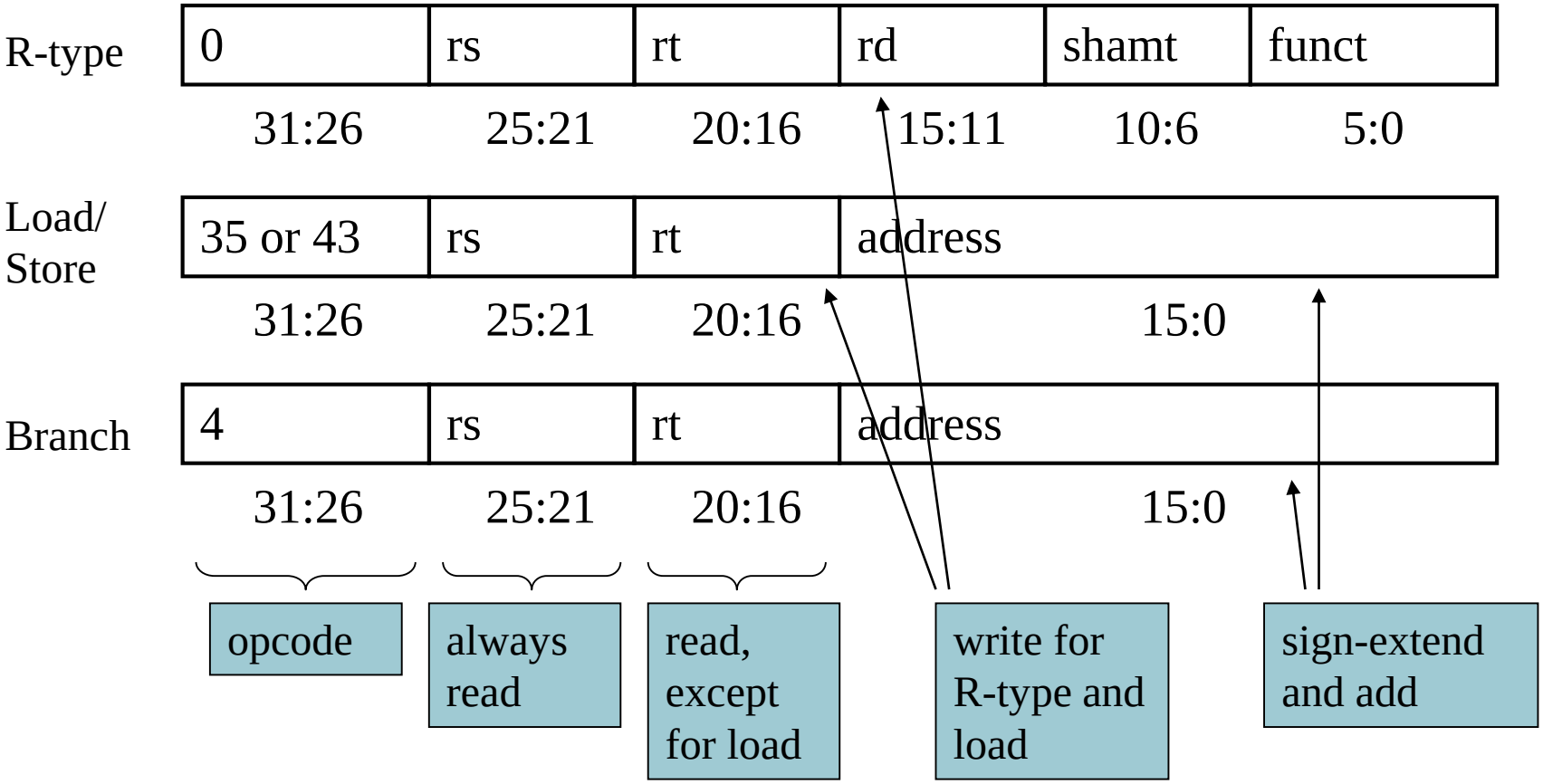

Datapath with Control I

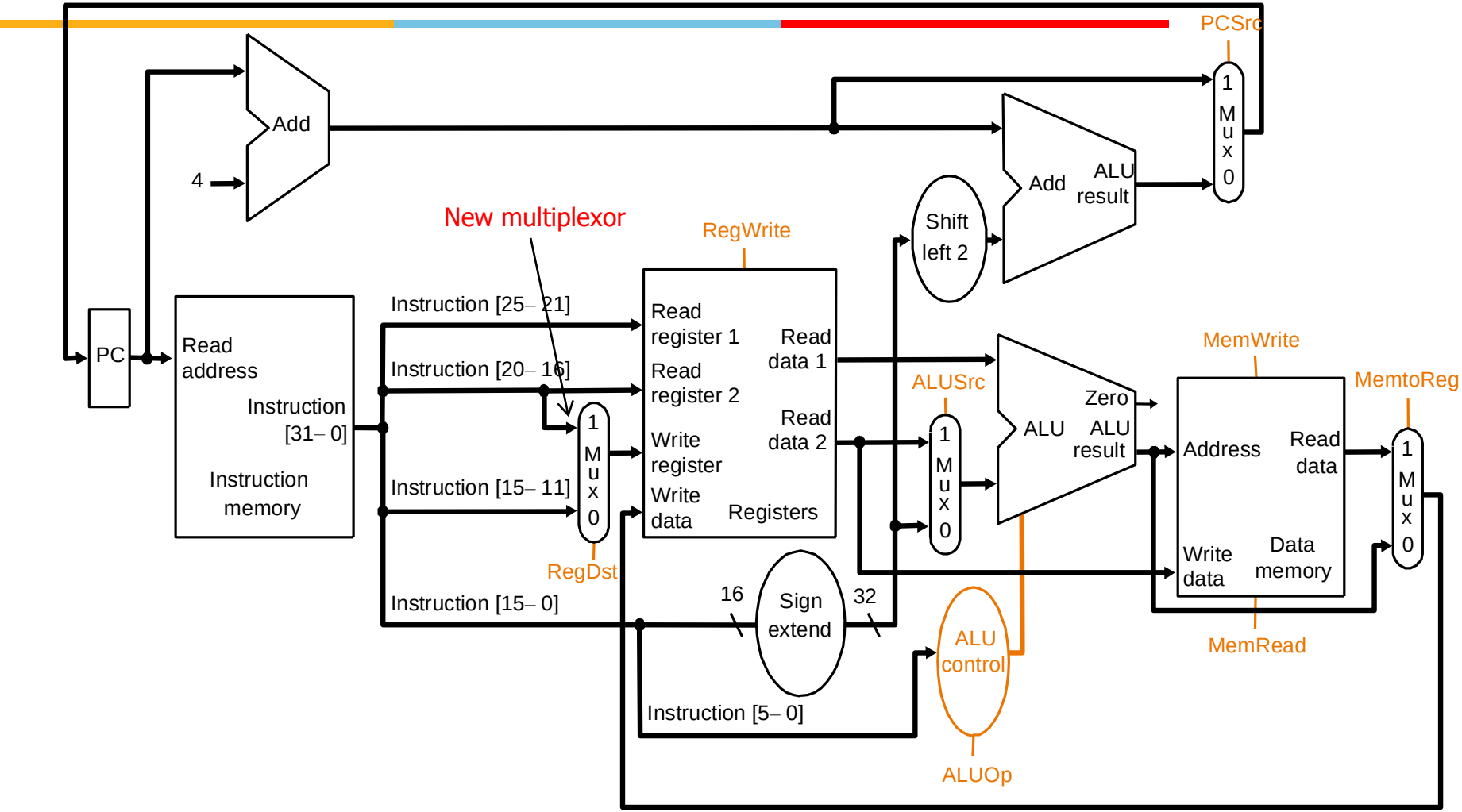

Adding control to the MIPS Datapath III (and a new multiplexor to select field to specify destination register): what are the functions of the 9 control signals?

Control Signals

Signal Name	Effect when deasserted	Effect when asserted
RegDst	The register destination number for the Write register comes from the rt field (bits 20-16)	The register destination number for the Write register comes from the rd field (bits 15-11)
RegWrite	None	The register on the Write register input is written with the value on the Write data input
AlLUSrc	The second ALU operand comes from the second register file output (Read data 2)	The second ALU operand is the sign-extended, lower 16 bits of the instruction
PCSrc	The PC is replaced by the output of the adder that computes the value of PC + 4	The PC is replaced by the output of the adder that computes the branch target
MemRead	None	Data memory contents designated by the address input are put on the first Read data output
MemWrite	None	Data memory contents designated by the address input are replaced by the value of the Write data input
MemtoReg	The value fed to the register Write data input comes from the ALU	The value fed to the register Write data input comes from the data memory

Effects of the seven control signals

Datapath with Control II

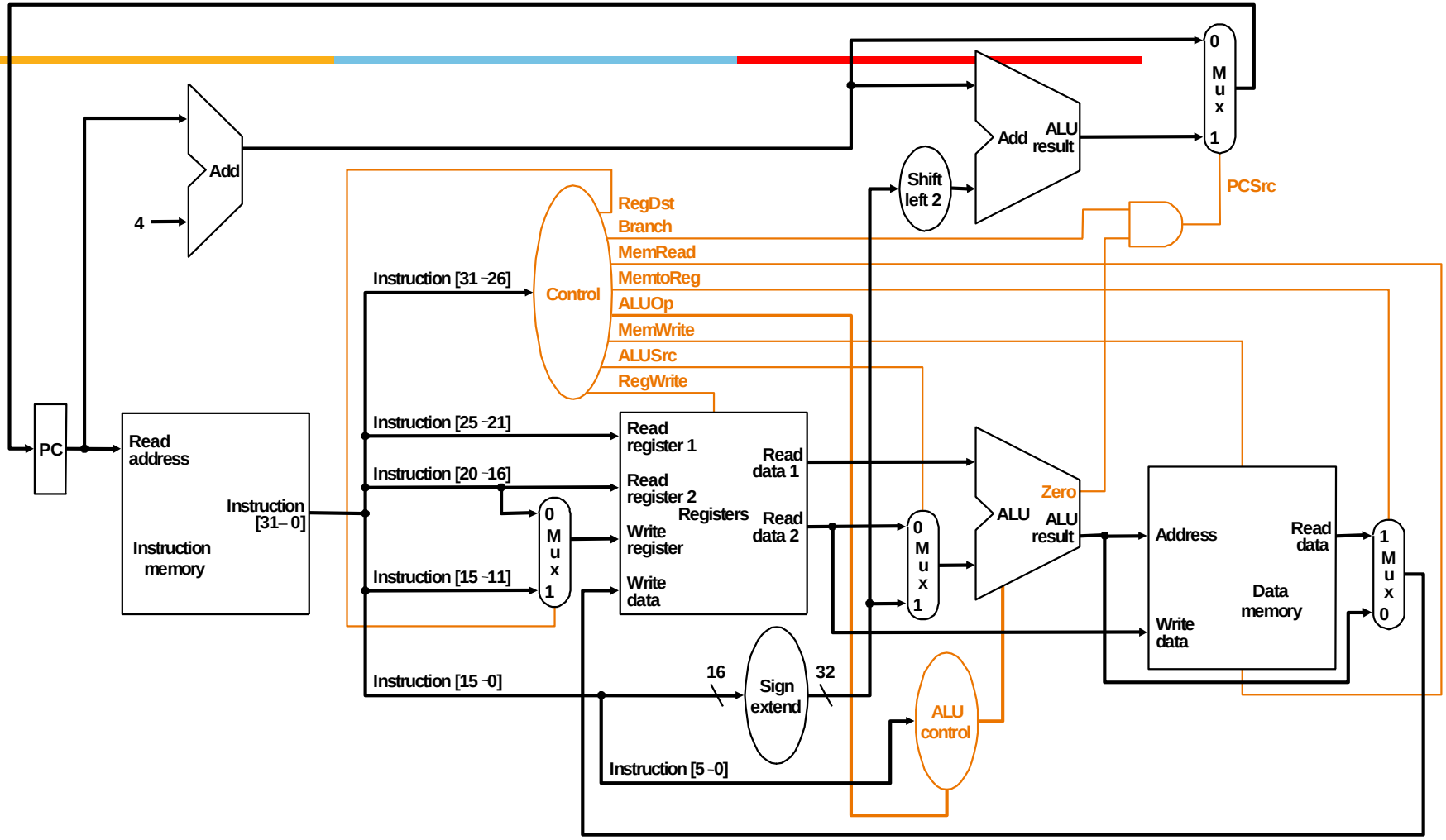

MIPS datapath with the control unit: input to control is the 6-bit instruction opcode field, output is seven 1-bit signals and the 2-bit ALUOp signal

Datapath with Control II (cont.)

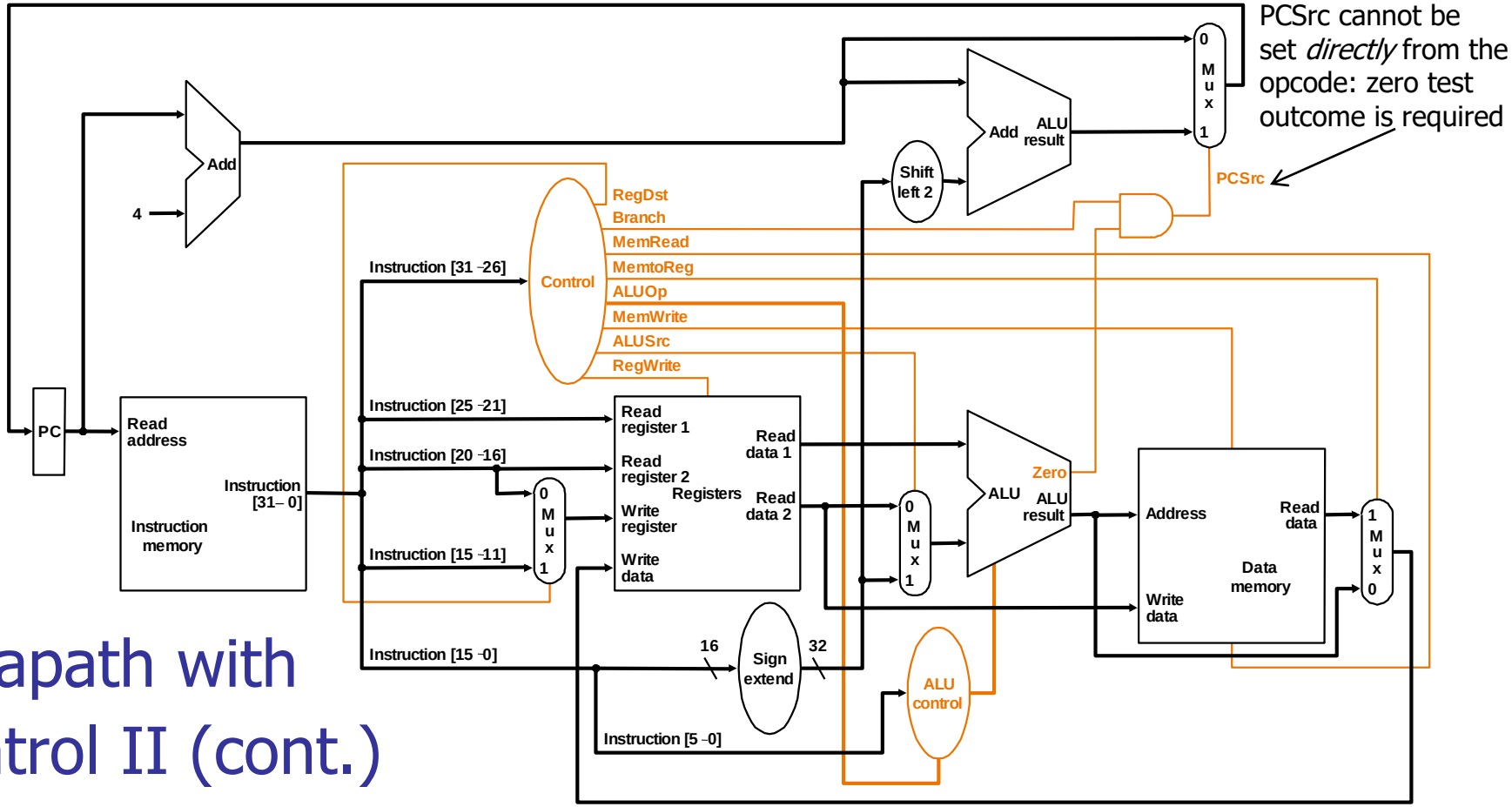

Determining control signals for the MIPS datapath based on instruction opcode

Instruction	RegDst	ALUSrc	Memto-Reg	Reg Write	Mem Read	Mem Write	Branch	ALUOp1	ALUp0
R-format	1	0	0	1	0	0	0	1	0
`lw`	0	1	1	1	1	0	0	0	0
`sw`	X	1	X	0	0	1	0	0	0
`beq`	X	0	X	0	0	0	1	0	1

Control Signals: R-Type Instruction

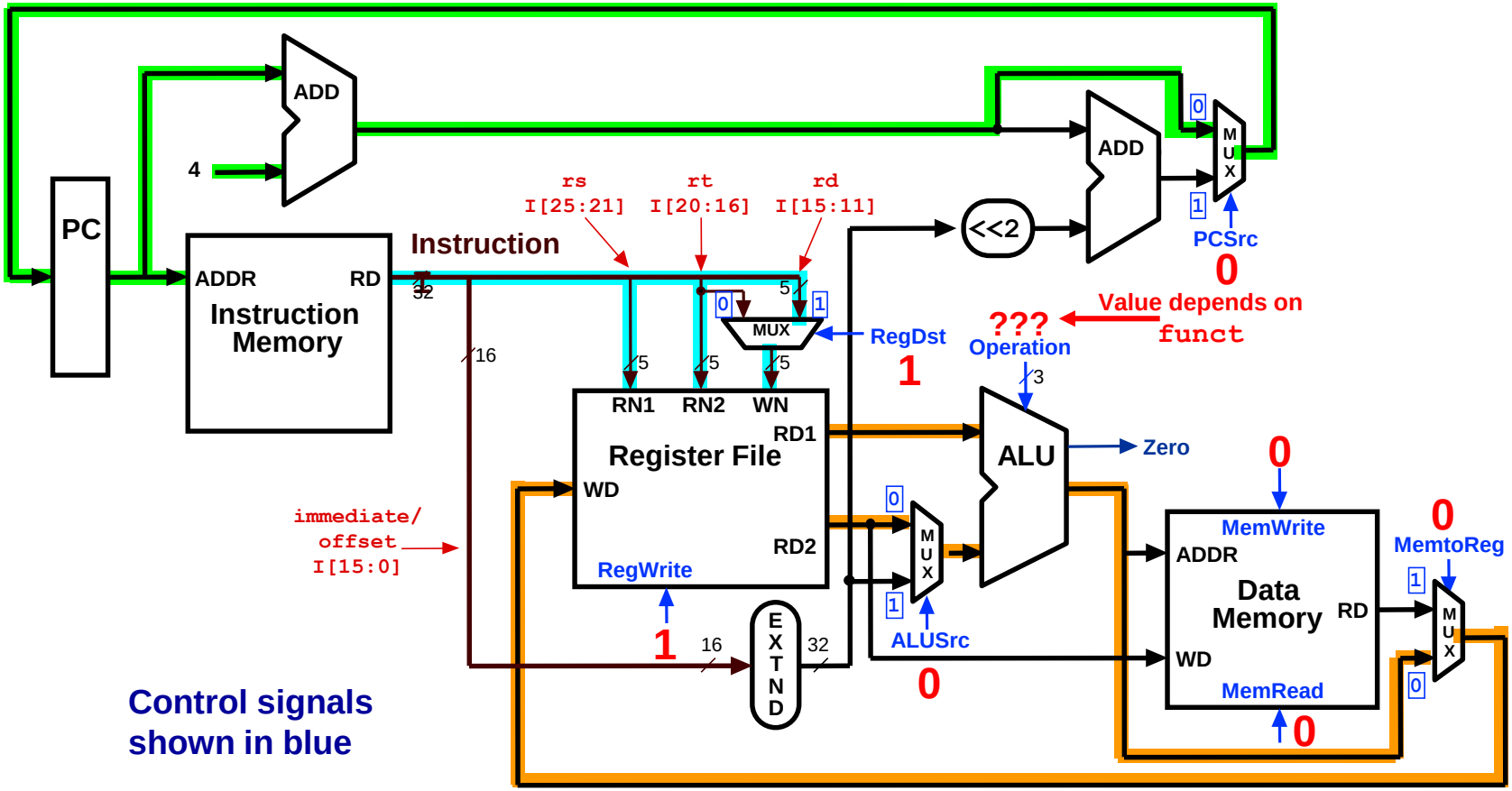

Control Signals: `lw` Instruction

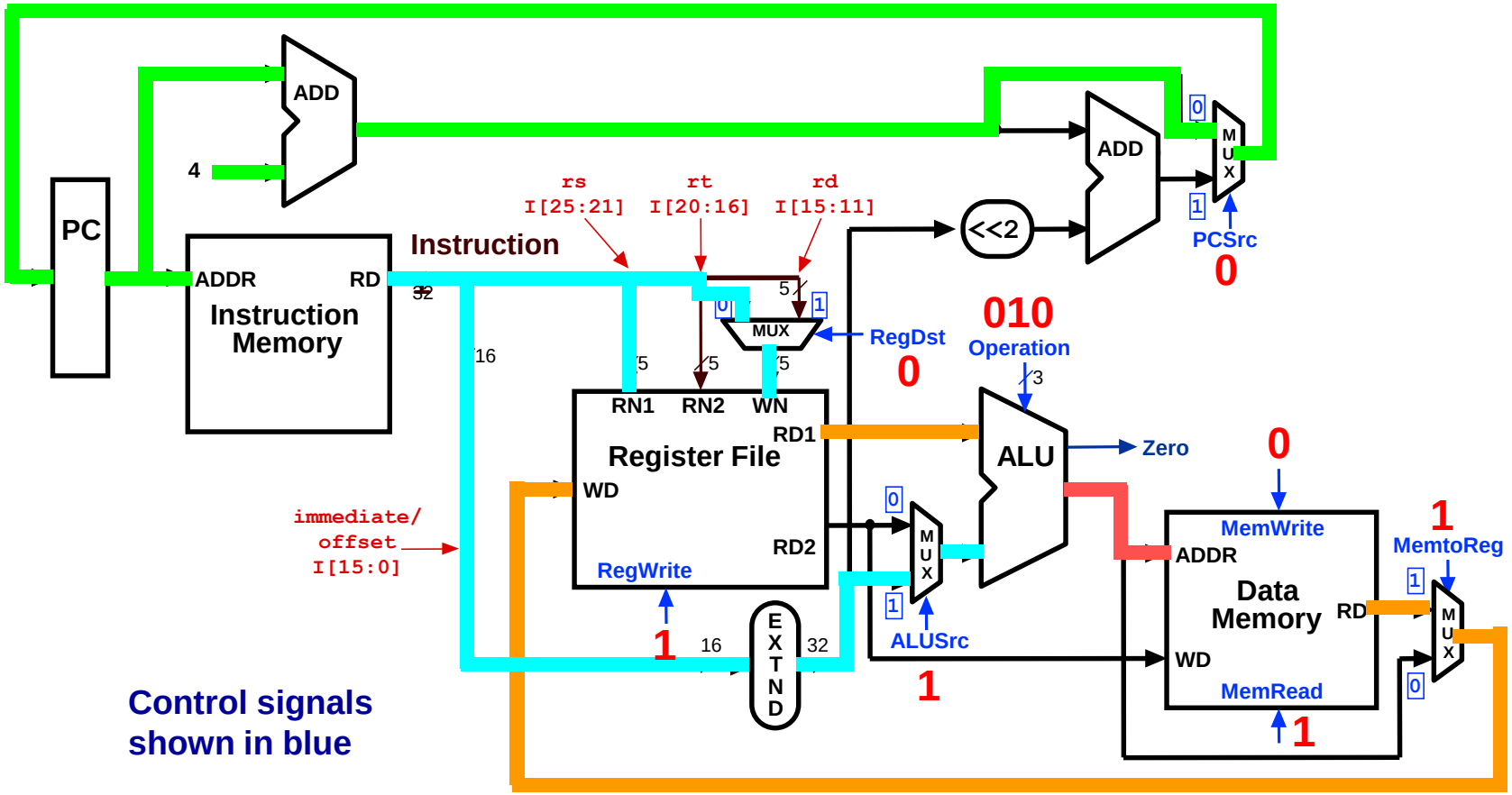

Control Signals: `beq` Instruction

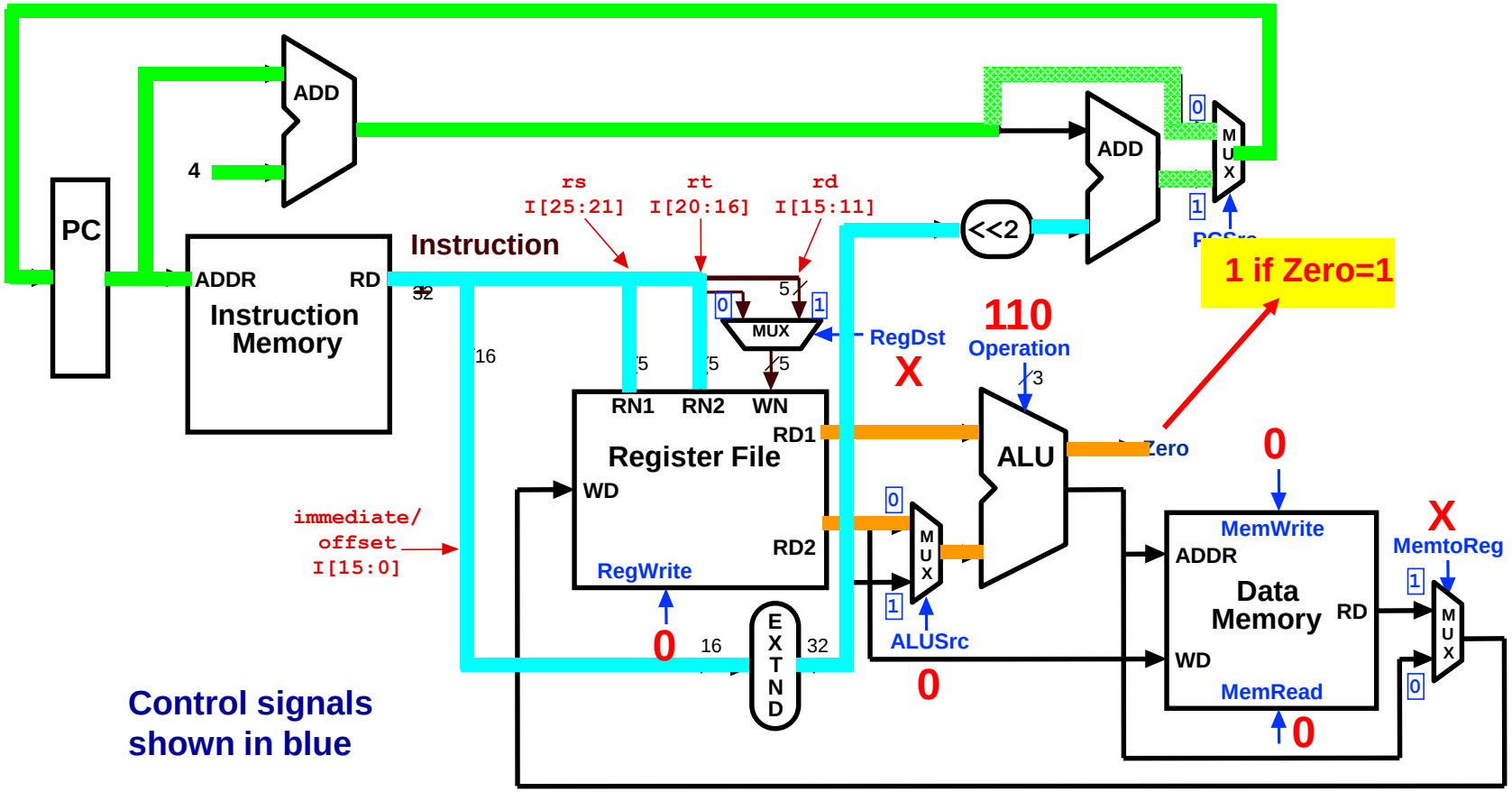

Implementation: Main Control Block

	Signal name	R-format	lw	sw	beq
Inputs	Op5	0	1	1	0
	Op4	0	0	0	0
	Op3	0	0	1	0
	Op2	0	0	0	1
	Op1	0	1	1	0
	Op0	0	1	1	0
Outputs	RegDst	1	0	x	x
	ALUSrc	0	1	1	0
	MemtoReg	0	1	x	x
	RegWrite	1	1	0	0
	MemRead	0	1	0	0
	MemWrite	0	0	1	0
	Branch	0	0	0	1
	ALUOp1	1	0	0	0
	ALUOP2	0	0	0	1

Truth table for main control signals

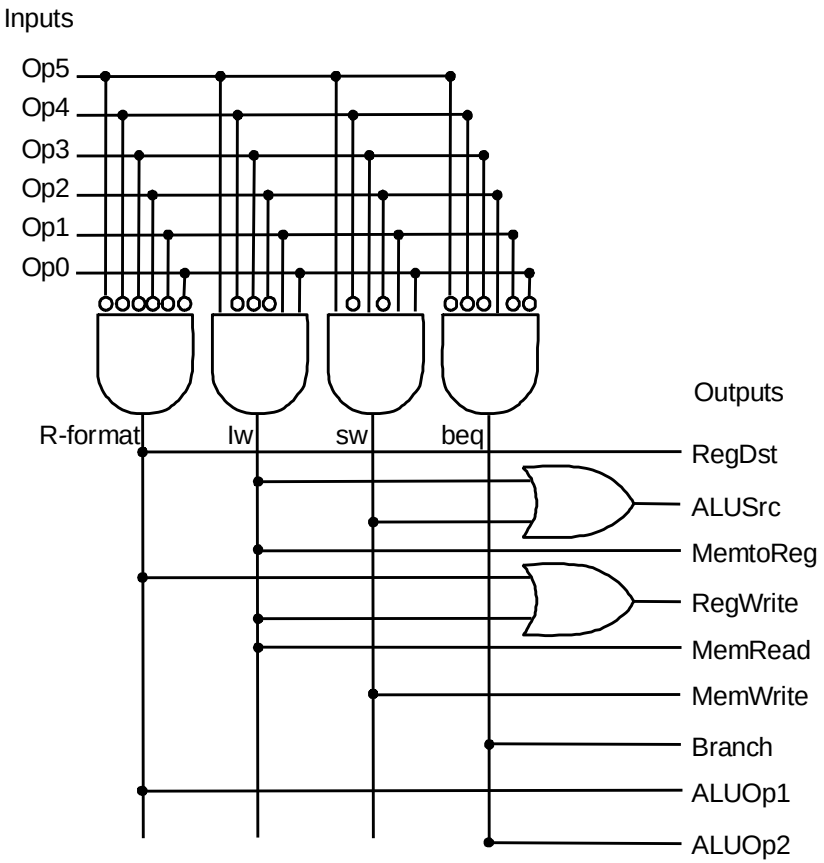

Main control PLA (programmable logic array)

Datapath with Control III

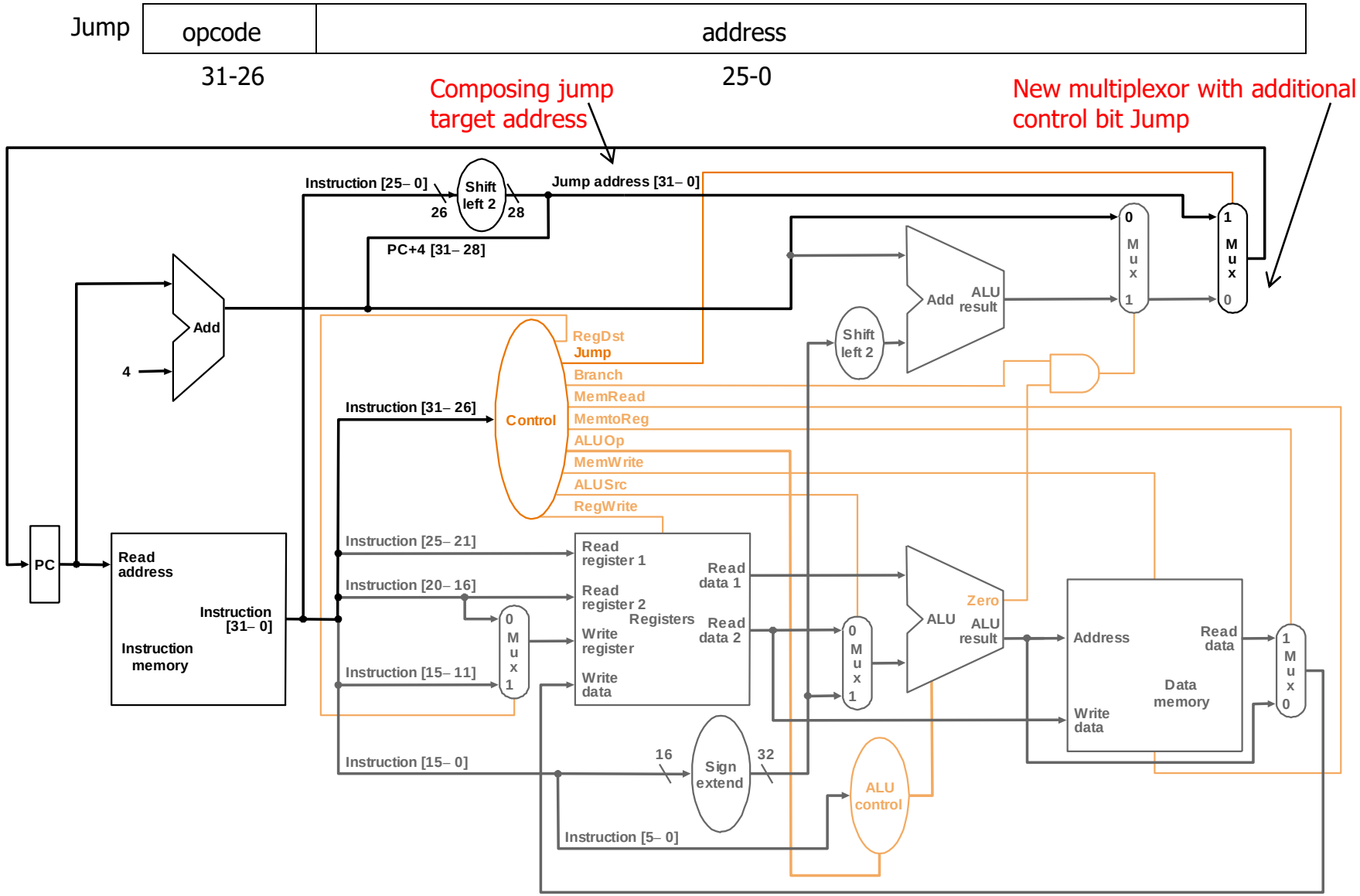

MIPS datapath extended to jumps: control unit generates new Jump control bit

Datapath Executing j

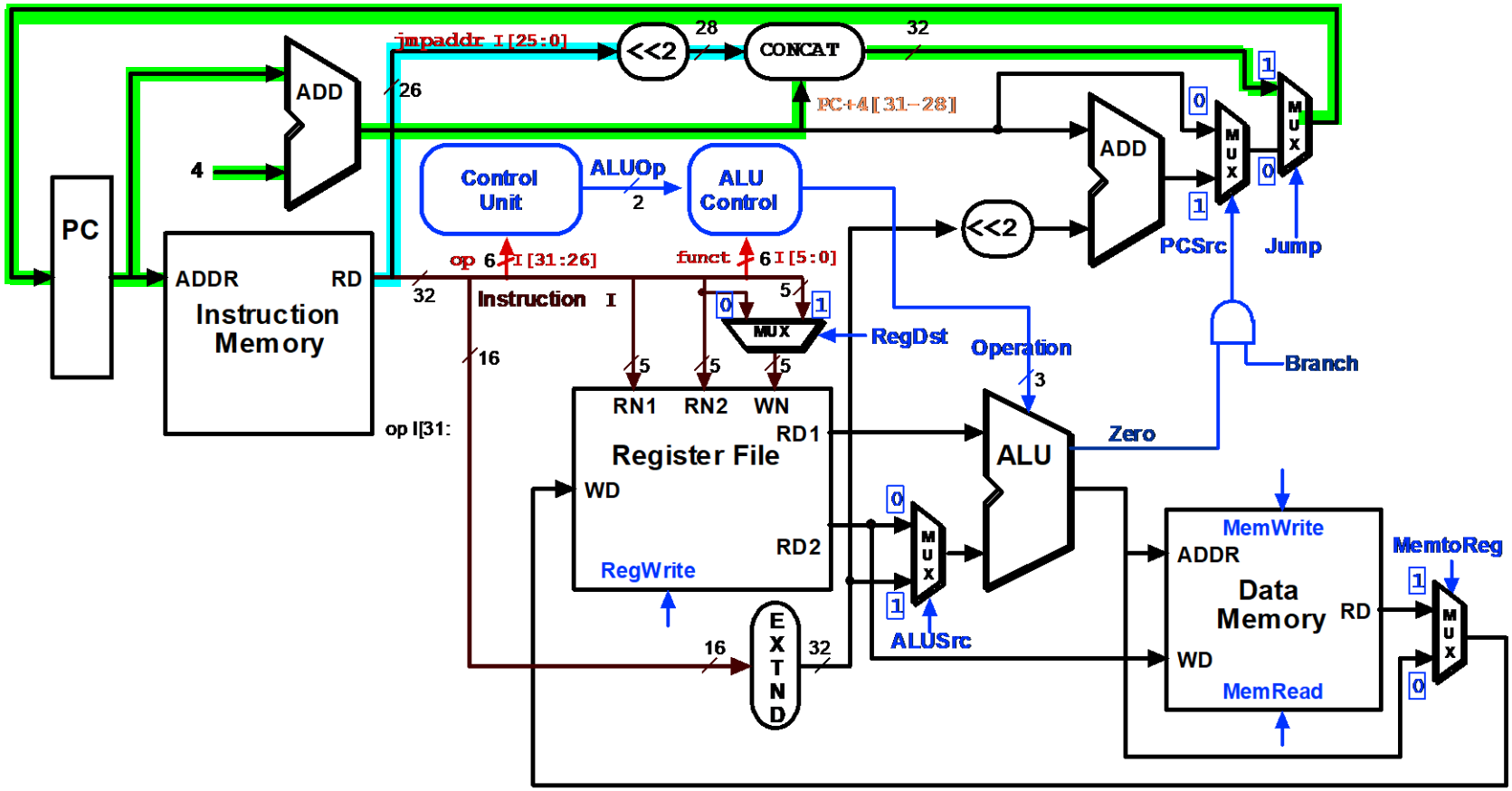

Single-cycle Implementation Notes

- *The steps are not really distinct* as each instruction completes in exactly one clock cycle – they simply indicate the sequence of data flowing through the datapath
- *The operation of the datapath during a cycle is purely combinational* – nothing is stored during a clock cycle
- Therefore, the machine is stable in a particular state at the start of a cycle and reaches a new stable state only at the end of the cycle
- *Very important for understanding single-cycle computing*

Single-Cycle Design Problems

- Assuming fixed-period clock every instruction datapath uses one clock cycle implies:
  - CPI = 1
  - cycle time determined by length of the longest instruction path (load)
    - but several instructions could run in a shorter clock cycle: *waste of time*
    - consider if we have more complicated instructions like floating point!
  - resources used more than once in the same cycle need to be duplicated
    - *waste of hardware and chip area*

Example: Fixed-period clock vs. Variable period clock in a single-cycle implementation

- Consider a machine with an additional floating point unit. Assume functional unit delays as follows
  - *memory*: 2 ns., *ALU* and *adders*: 2 ns., *FPU add*: 8 ns., *FPU multiply*: 16 ns., *register file access* (read or write): 1 ns.
  - *multiplexors*, *control unit*, *PC accesses*, *sign extension*, *wires*: no delay
- Assume instruction mix as follows
  - all loads take same time and comprise 31%
  - all stores take same time and comprise 21%
  - R-format instructions comprise 27%
  - branches comprise 5%
  - jumps comprise 2%
  - FP adds and subtracts take the same time and totally comprise 7%
  - FP multiplys and divides take the same time and totally comprise 7%
- *Compare the performance of (a) a single-cycle implementation using a fixed-period clock with (b) one using a variable-period clock where each instruction executes in one clock cycle that is only as long as it needs to be (not really practical but pretend it's possible!)*

Solution

Instruction class	Instr. mem.	Register read	ALU oper.	Data mem.	Register write	FPU add/ sub	FPU mul/ div	Total time ns.
Load word	2	1	2	2	1			8
Store word	2	1	2	2				7
R-format	2	1	2	0	1			6
Branch	2	1	2					5
Jump	2							2
FP mul/div	2	1			1		16	20
FP add/sub	2	1			1	8		12

- Clock period for fixed-period clock = longest instruction time = 20 ns.
- Average clock period for variable-period clock = $8 \times 31\% + 7 \times 21\% + 6 \times 27\% + 5 \times 5\% + 2 \times 2\% + 20 \times 7\% + 12 \times 7\%$ = 7.0 ns.
- Therefore, $\text{performance}_{\text{var-period}} / \text{performance}_{\text{fixed-period}} = 20/7 = 2.9$

Fixing the problem with single-cycle designs

- One solution: a variable-period clock with different cycle times for each instruction class
  - *unfeasible*, as implementing a variable-speed clock is technically difficult
- Another solution:
  - use a smaller cycle time…
  - …have different instructions take different numbers of cycles

    by breaking instructions into steps and fitting each step into one cycle
  - *feasible: multicyle approach*!