Nexteer Confidential -- ©2014- 2015 Nexteer

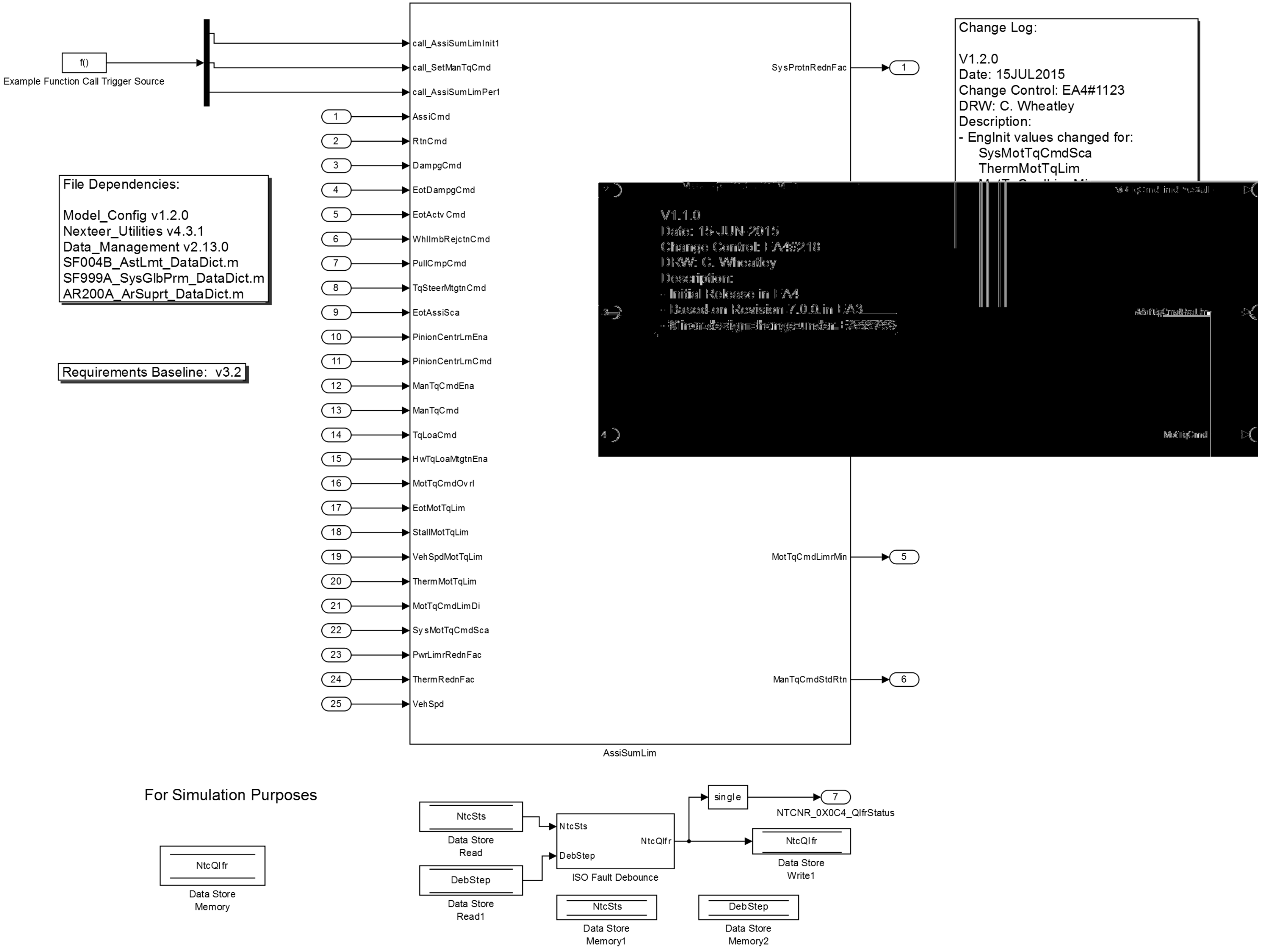
f()
Example Function Call Trigger Source
call_AssiSumLimInit1
call_SetManTqCmd
call_AssiSumLimPer1
1
AssiCmd
2
RtnCmd
3
DampgCmd
4
EotDampgCmd
5
EotActvCmd
6
WhlImbRejctnCmd
7
PullCmpCmd
8
TqSteerMtgtnCmd
9
EotAssiSca
10
PinionCentrLrnEna
11
PinionCentrLrnCmd
12
ManTqCmdEna
13
ManTqCmd
14
TqLoaCmd
15
HwTqLoaMtgtnEna
16
MotTqCmdOvrl
17
EotMotTqLim
18
StallMotTqLim
19
VehSpdMotTqLim
20
ThermMotTqLim
21
MotTqCmdLimDi
22
SysMotTqCmdSca
23
PwrLimrRednFac
24
ThermRednFac
25
VehSpd
SysProtnRednFac
1
MotTqCmdLimdPreStall
2
MotTqCmdPreLim
3
MotTqCmd
4
MotTqCmdLimrMin
5
ManTqCmdStdRtn
6
AssiSumLim
NtcSts
Data Store Read
DebStep
Data Store Read1
NtcSts
DebStep
NtcQlfr
ISO Fault Debounce
single
7
NTCNR_0X0C4_QlfrStatus
NtcQlfr
Data Store Write1
NtcSts
Data Store Memory1
DebStep
Data Store Memory2
NtcQlfr
Data Store Memory

Change Log:

V1.2.0
Date: 15JUL2015
Change Control: EA4#1123
DRW: C. Wheatley
Description:
- EngInit values changed for:
    SysMotTqCmdSca
    ThermMotTqLim

V1.1.0
Date: 15-JUN-2015
Change Control: EA4#218
DRW: C. Wheatley
Description:
- Initial Release in EA4
- Based on Revision 7.0.0 in EA3
- Minor design change under [illegible]

File Dependencies:

Model_Config v1.2.0
Nexteer_Utilities v4.3.1
Data_Management v2.13.0
SF004B_AstLmt_DataDict.m
SF999A_SysGlbPrm_DataDict.m
AR200A_ArSuprt_DataDict.m

Requirements Baseline: v3.2

For Simulation Purposes

SF-04B Assist Summation and Limiting (Current)
v7.0.0 Date: 19-Feb-2015

This function sums torque commands from various functions and then limits the net command. Before summation, it allows for application of safety overwrites of incoming signal values.

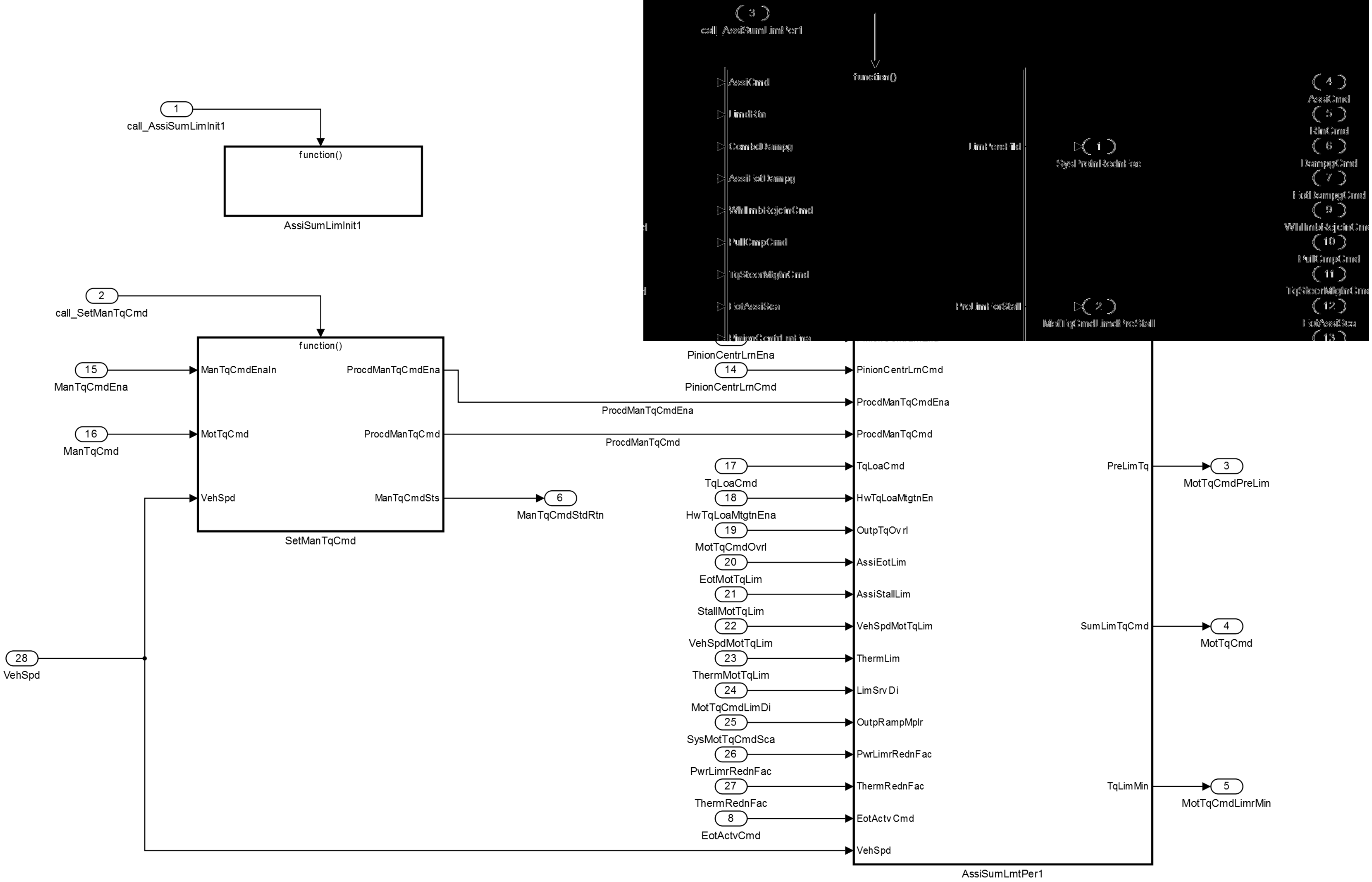
1
call_AssiSumLimInit1
function()
AssiSumLimInit1
2
call_SetManTqCmd
function()
15
ManTqCmdEna
ManTqCmdEnaIn
16
ManTqCmd
MotTqCmd
VehSpd
ProcdManTqCmdEna
ProcdManTqCmd
ManTqCmdSts
SetManTqCmd
6
ManTqCmdStdRtn
28
VehSpd
3
call_AssiSumLimPer1
function()
AssiCmd
LimdRtn
CombdDampg
AssiEotDampg
WhlImbRejctnCmd
PullCmpCmd
TqSteerMitgnCmd
EotAssiSca
PinionCentrLrnEna
LimPercFild
PreLimForStall
1
SysProtnRednFac
2
MotTqCmdLimdPreStall
4
AssiCmd
5
RtnCmd
6
DampgCmd
7
EotDampgCmd
9
WhlImbRejctnCmd
10
PullCmpCmd
11
TqSteerMitgnCmd
12
EotAssiSca
13
PinionCentrLrnEna
14
PinionCentrLrnCmd
PinionCentrLrnCmd
ProcdManTqCmdEna
ProcdManTqCmdEna
ProcdManTqCmd
ProcdManTqCmd
17
TqLoaCmd
TqLoaCmd
18
HwTqLoaMtgtnEna
HwTqLoaMtgtnEn
19
MotTqCmdOvrl
OutpTqOvrl
20
EotMotTqLim
AssiEotLim
21
StallMotTqLim
AssiStallLim
22
VehSpdMotTqLim
VehSpdMotTqLim
23
ThermMotTqLim
ThermLim
24
MotTqCmdLimDi
LimSrvDi
25
SysMotTqCmdSca
OutpRampMplr
26
PwrLimrRednFac
PwrLimrRednFac
27
ThermRednFac
ThermRednFac
8
EotActvCmd
EotActvCmd
VehSpd
PreLimTq
SumLimTqCmd
TqLimMin
AssiSumLmtPer1
3
MotTqCmdPreLim
4
MotTqCmd
5
MotTqCmdLimrMin

f()

function

Nexteer Confidential -- ©2014- 2015 Nexteer

This component monitors Learn Pinion Center signals for safety violations, and sets a Nexteer Trouble Code when a violation persis[redacted]

This initialization runnable calls DiagMgr to se[redacted]

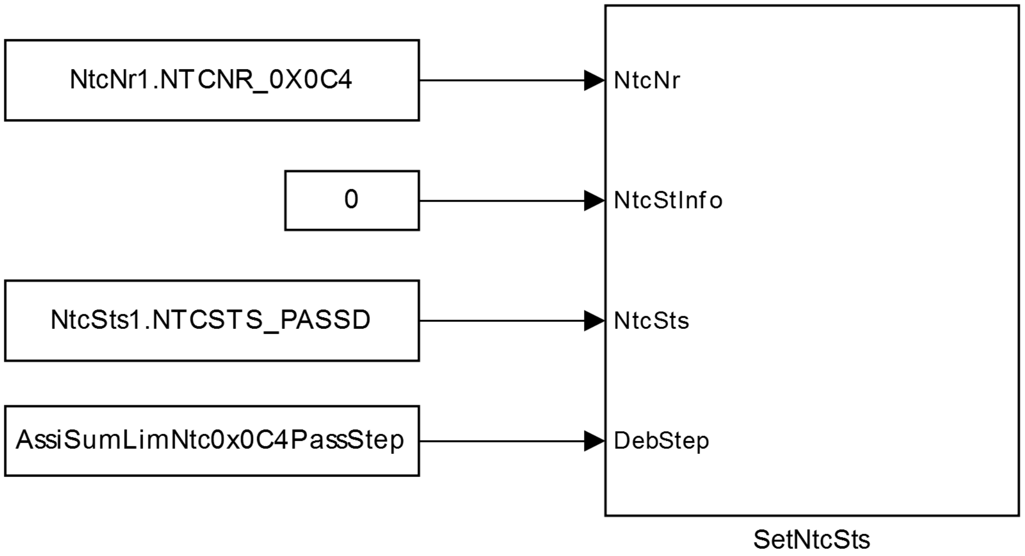
NtcNr1.NTCNR_0X0C4
0
NtcSts1.NTCSTS_PASSD
AssiSumLimNtc0x0C4PassStep
NtcNr
NtcStInfo
NtcSts
DebStep
SetNtcSts

Nexteer Confidential -- ©2014- 2015 Nexteer

The general flow of this runnable is:
1. Apply safety-related conditioning to some incoming signals.
2. Sum all the various motor torque commands requested by upstream functions.
3. Select a source for motor torque command... normally use the summation, but not always.
4. Limit the chosen torque command to protect the system from damage (overheating).
5. Apply a 0-1 scale factor generally associated with system diagnostic or fault mitigation needs.

f()
function

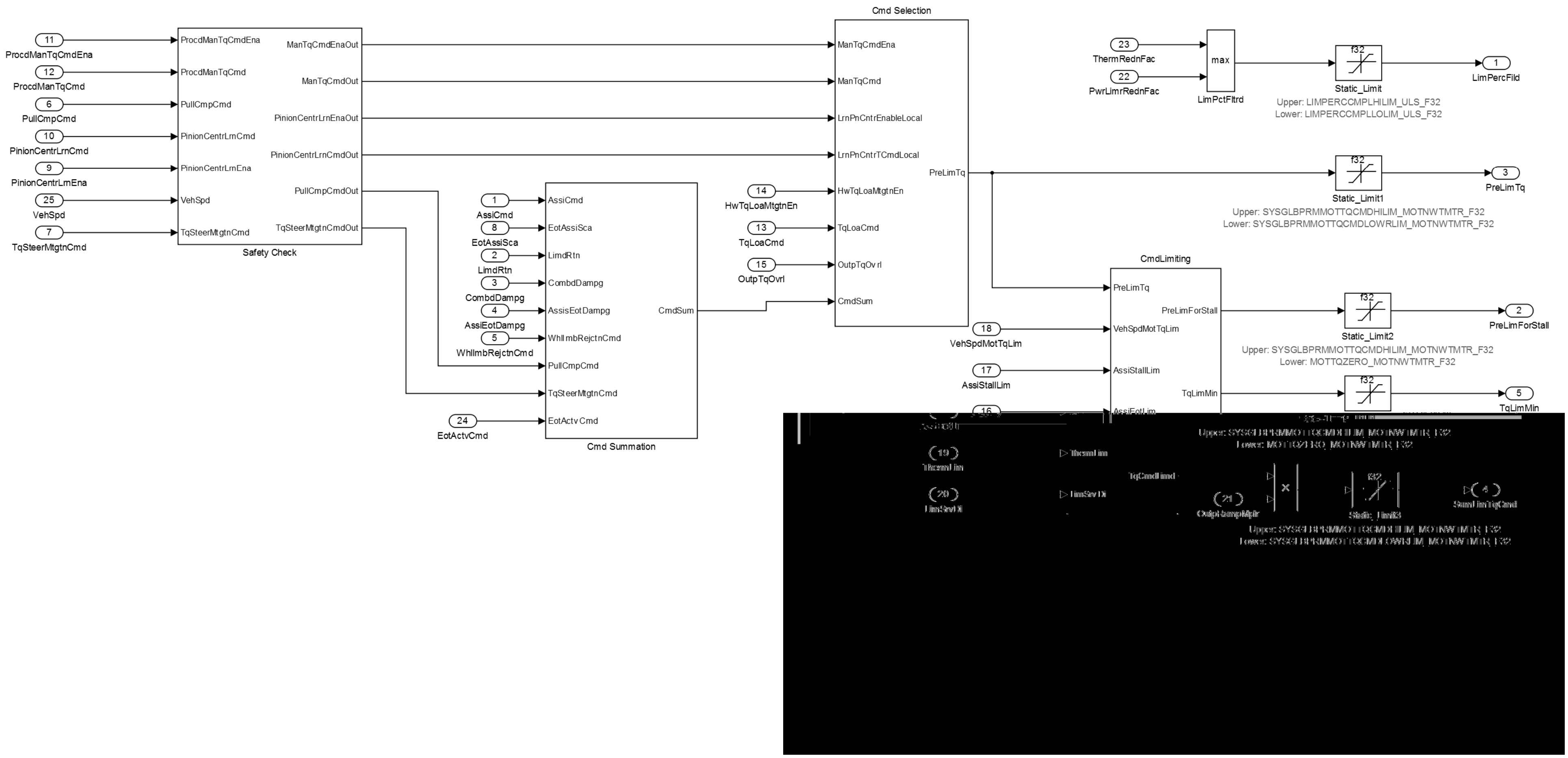

11
ProcdManTqCmdEna
12
ProcdManTqCmd
6
PullCmpCmd
10
PinionCentrLrnCmd
9
PinionCentrLrnEna
25
VehSpd
7
TqSteerMtgtnCmd
ProcdManTqCmdEna
ProcdManTqCmd
PullCmpCmd
PinionCentrLrnCmd
PinionCentrLrnEna
VehSpd
TqSteerMtgtnCmd
ManTqCmdEnaOut
ManTqCmdOut
PinionCentrLrnEnaOut
PinionCentrLrnCmdOut
PullCmpCmdOut
TqSteerMtgtnCmdOut
Safety Check
1
AssiCmd
8
EotAssiSca
2
LimdRtn
3
CombdDampg
4
AssiEotDampg
5
WhlImbRejctnCmd
24
EotActvCmd
AssiCmd
EotAssiSca
LimdRtn
CombdDampg
AssisEotDampg
WhlImbRejctnCmd
PullCmpCmd
TqSteerMtgtnCmd
EotActv Cmd
CmdSum
Cmd Summation
Cmd Selection
14
HwTqLoaMtgtnEn
13
TqLoaCmd
15
OutpTqOvrl
ManTqCmdEna
ManTqCmd
LrnPnCntrEnableLocal
LrnPnCntrTCmdLocal
HwTqLoaMtgtnEn
TqLoaCmd
OutpTqOv rl
CmdSum
PreLimTq
23
ThermRednFac
22
PwrLimrRednFac
max
LimPctFltrd
f32
Static_Limit
Upper: LIMPERCCMPLHILIM_ULS_F32
Lower: LIMPERCCMPLLOLIM_ULS_F32
1
LimPercFild
f32
Static_Limit1
Upper: SYSGLBPRMMOTTQCMDHILIM_MOTNWTMTR_F32
Lower: SYSGLBPRMMOTTQCMDLOWRLIM_MOTNWTMTR_F32
3
PreLimTq
CmdLimiting
18
VehSpdMotTqLim
17
AssiStallLim
PreLimTq
VehSpdMotTqLim
AssiStallLim
PreLimForStall
TqLimMin
f32
Static_Limit2
Upper: SYSGLBPRMMOTTQCMDHILIM_MOTNWTMTR_F32
Lower: MOTTQZERO_MOTNWTMTR_F32
2
PreLimForStall
f32
5
TqLimMin

[redacted]

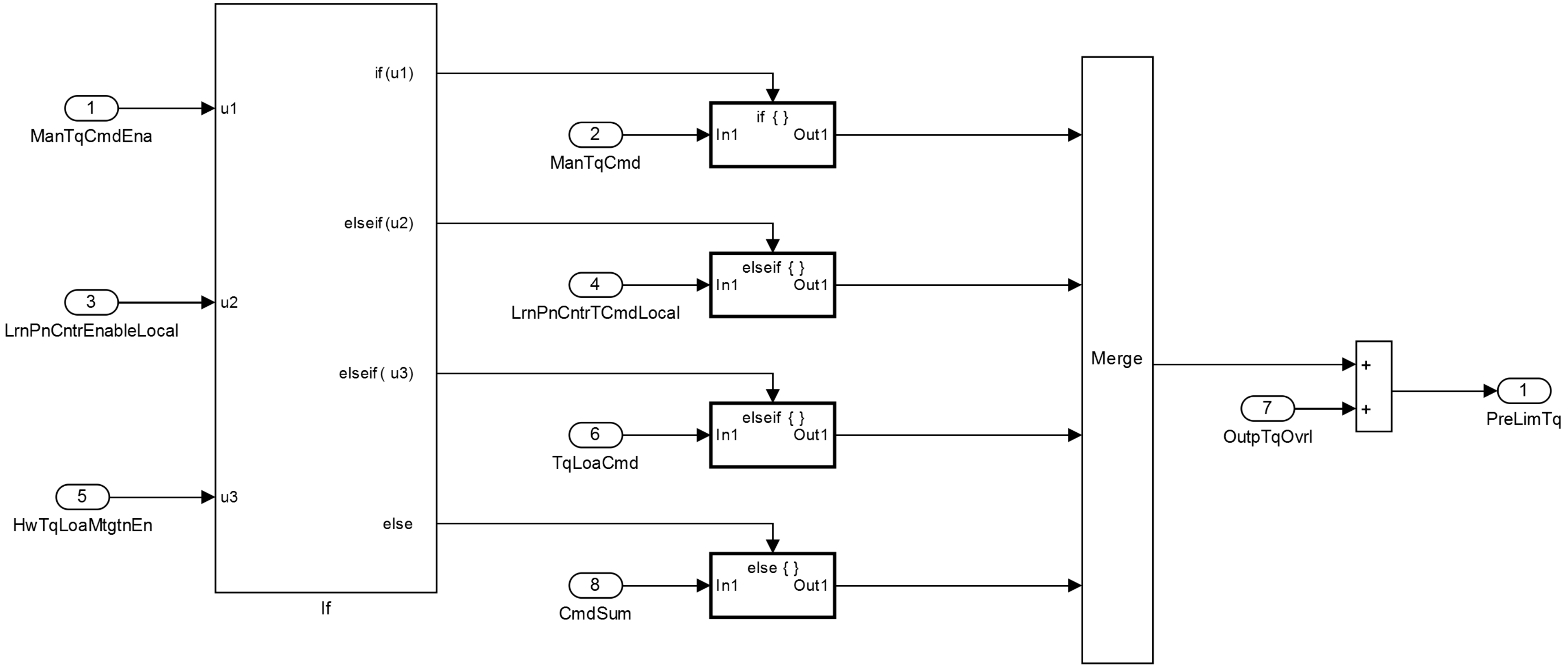
1
ManTqCmdEna
3
LrnPnCntrEnableLocal
5
HwTqLoaMtgtnEn
u1
u2
u3
if (u1)
elseif (u2)
elseif (u3)
else
If
2
ManTqCmd
if { }
In1
Out1
4
LrnPnCntrTCmdLocal
elseif { }
In1
Out1
6
TqLoaCmd
elseif { }
In1
Out1
8
CmdSum
else { }
In1
Out1
Merge
+
+
7
OutpTqOvrl
1
PreLimTq

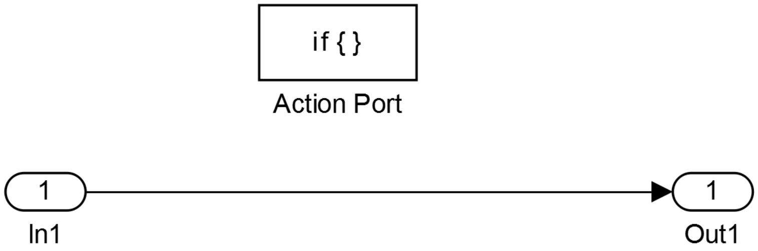
if { }
Action Port
1
In1
1
Out1

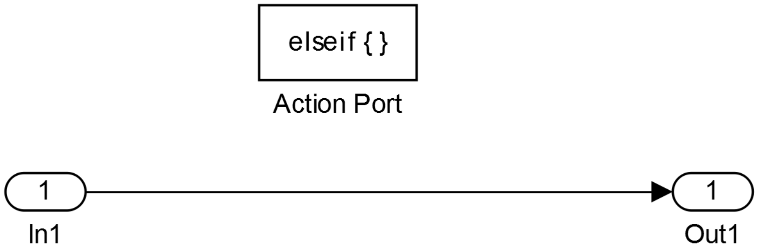
elseif { }
Action Port
1
In1
1
Out1

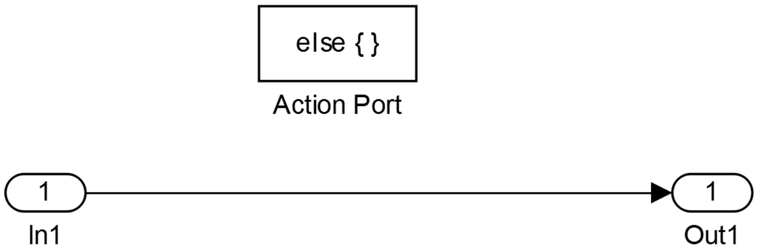
else { }
Action Port
1
In1
1
Out1

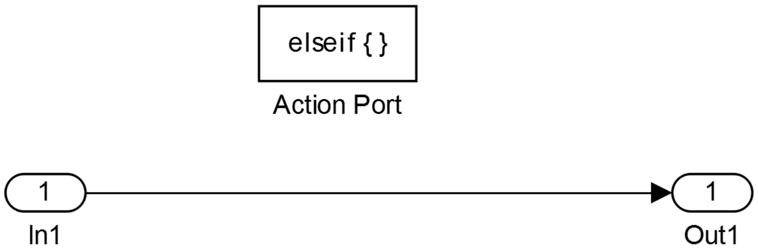
elseif { }
Action Port
1
In1
1
Out1

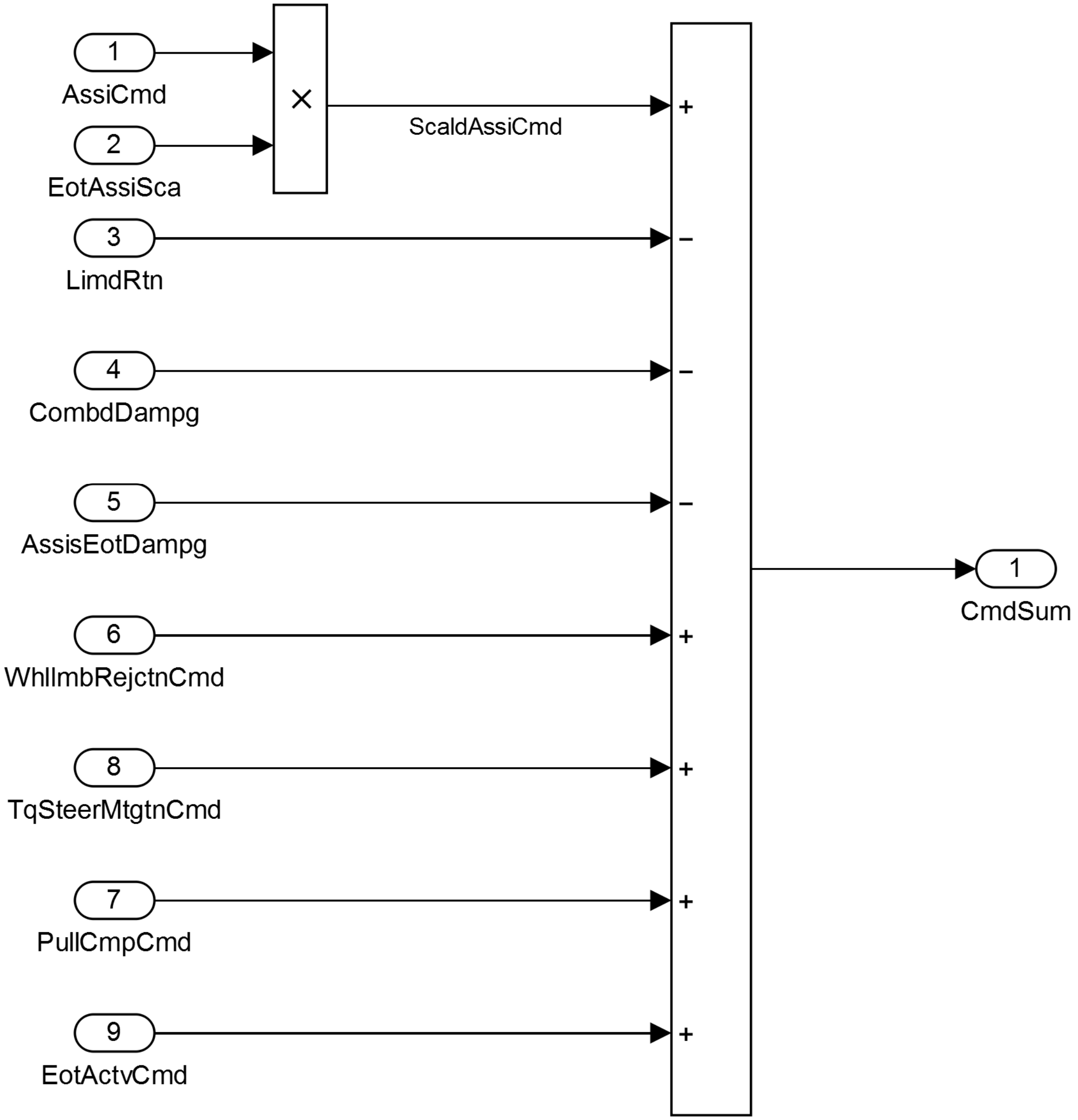
1
AssiCmd
2
EotAssiSca
×
ScaldAssiCmd
3
LimdRtn
4
CombdDampg
5
AssisEotDampg
6
WhlImbRejctnCmd
8
TqSteerMtgtnCmd
7
PullCmpCmd
9
EotActvCmd
+
−
−
−
+
+
+
+
1
CmdSum

This block applies an overall limit to the previous summation while outputting intermediate calculations along the way.

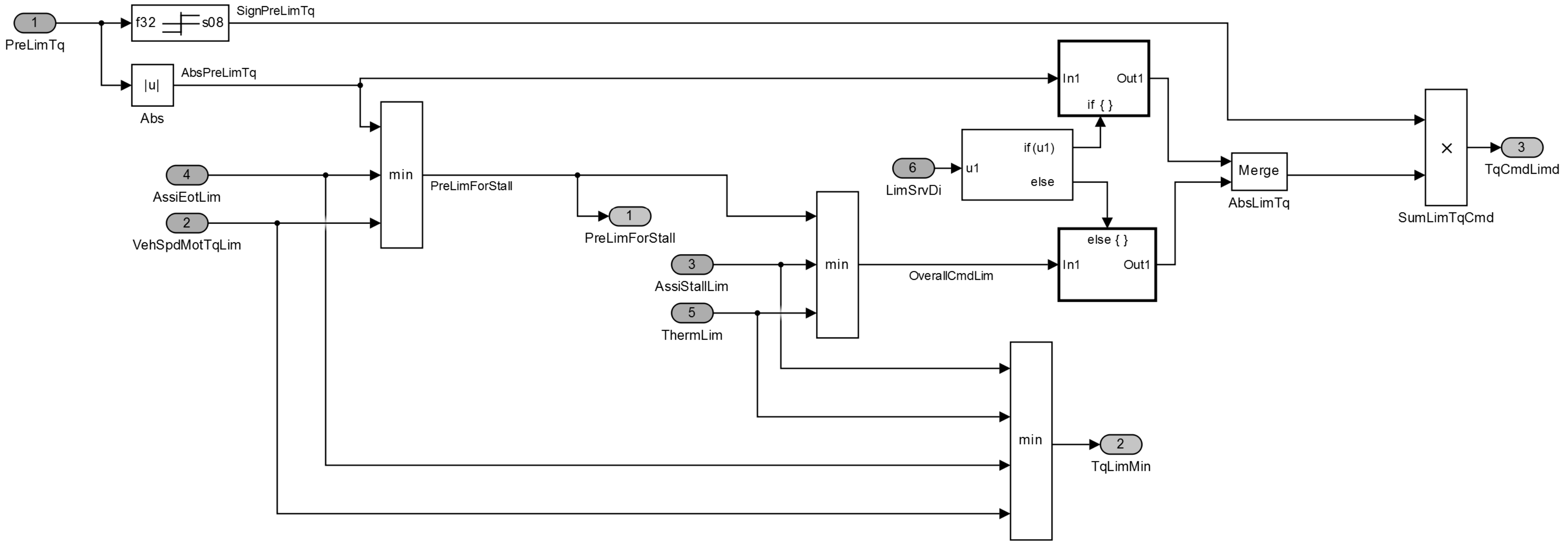
1
PreLimTq
f32
s08
SignPreLimTq
|u|
Abs
AbsPreLimTq
4
AssiEotLim
2
VehSpdMotTqLim
min
PreLimForStall
1
PreLimForStall
3
AssiStallLim
5
ThermLim
min
OverallCmdLim
6
LimSrvDi
u1
if(u1)
else
In1
Out1
if { }
else { }
In1
Out1
Merge
AbsLimTq
×
SumLimTqCmd
3
TqCmdLimd
min
2
TqLimMin

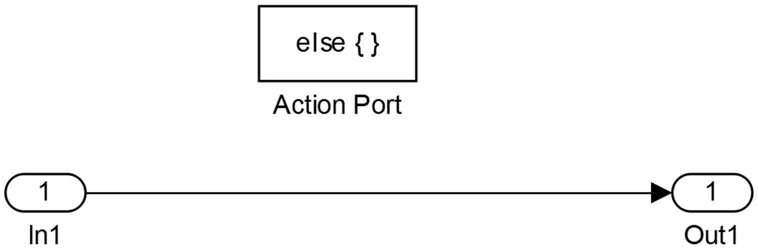
else { }
Action Port
1
In1
1
Out1

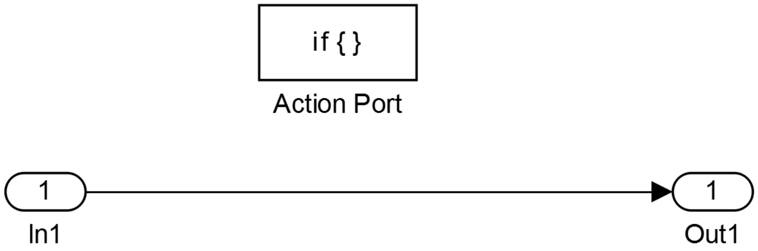
if { }
Action Port
1
In1
1
Out1

This routine applies safety-related conditioning to incoming signals. These operations are performed within this software component because it is intended to support ASIL-D. The components providing the inputs have lower ASIL ratings.

Manual Torque Command and Learn Pinion Center

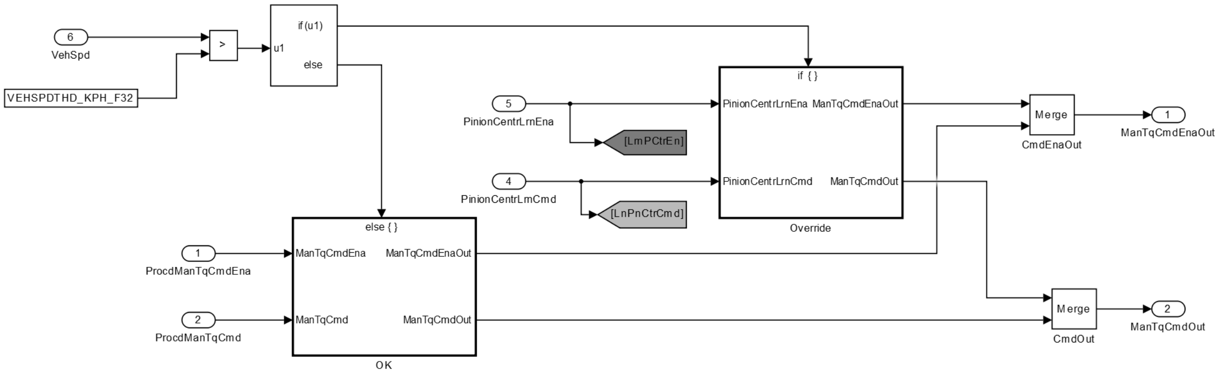
6
VehSpd
VEHSPDTHD_KPH_F32
>
u1
if(u1)
else
if { }
5
PinionCentrLrnEna
[LrnPCtrEn]
4
PinionCentrLrnCmd
[LnPnCtrCmd]
PinionCentrLrnEna
ManTqCmdEnaOut
PinionCentrLrnCmd
ManTqCmdOut
Override
Merge
CmdEnaOut
1
ManTqCmdEnaOut
else { }
1
ProcdManTqCmdEna
ManTqCmdEna
ManTqCmdEnaOut
2
ProcdManTqCmd
ManTqCmd
ManTqCmdOut
OK
Merge
CmdOut
2
ManTqCmdOut

Get NTC Qualifier Status to set Pinion Center Enable Out and Pinion Center Command Out

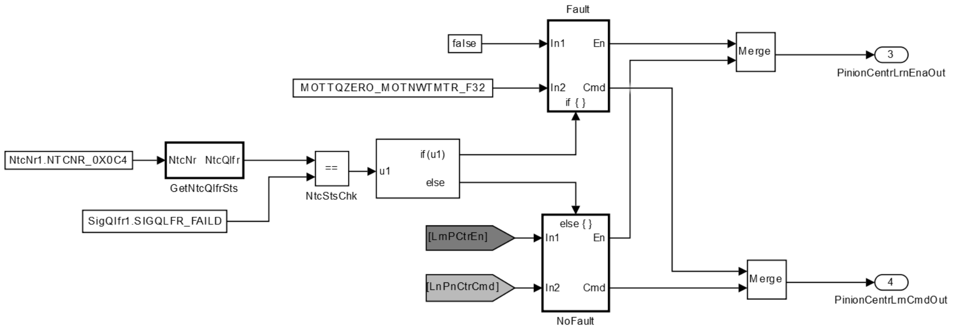
Fault
false
In1
En
MOTTQZERO_MOTNWTMTR_F32
In2
Cmd
if { }
Merge
3
PinionCentrLrnEnaOut
NtcNr1.NTCNR_0X0C4
NtcNr
NtcQlfr
GetNtcQlfrSts
==
NtcStsChk
SigQlfr1.SIGQLFR_FAILD
u1
if(u1)
else
else { }
[LrnPCtrEn]
In1
En
[LnPnCtrCmd]
In2
Cmd
NoFault
Merge
4
PinionCentrLrnCmdOut

Pull Compensation

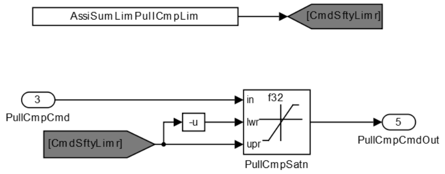
AssiSumLimPullCmpLim
[CmdSftyLimr]
3
PullCmpCmd
[CmdSftyLimr]
-u
in
lwr
upr
f32
PullCmpSatn
5
PullCmpCmdOut

Torque Steer Mitigation

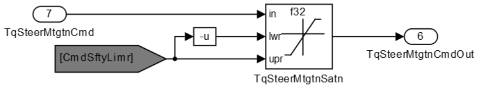
7
TqSteerMtgtnCmd
[CmdSftyLimr]
-u
in
lwr
upr
f32
TqSteerMtgtnSatn
6
TqSteerMtgtnCmdOut

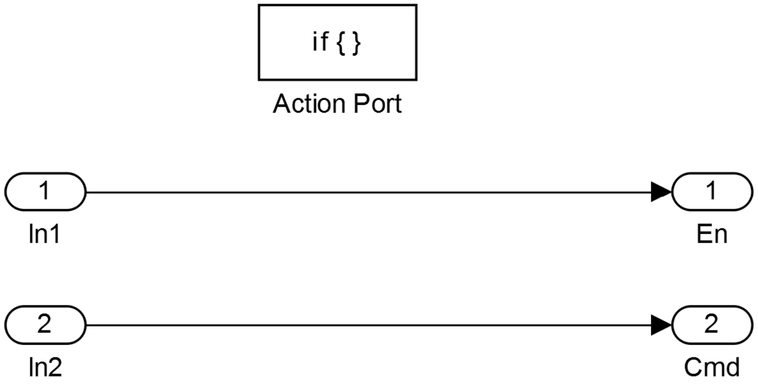
if { }
Action Port
1
In1
1
En
2
In2
2
Cmd

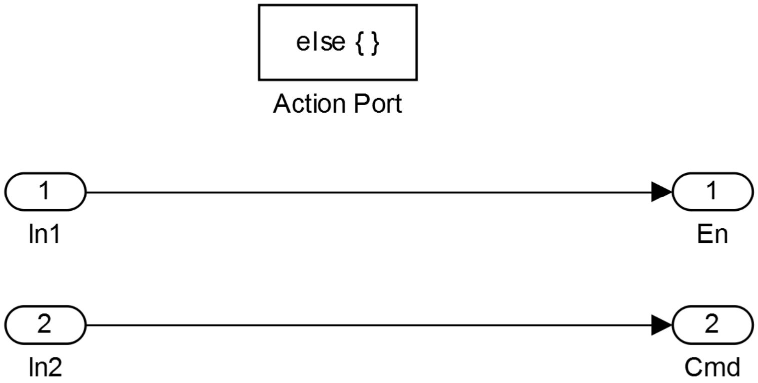
else { }
Action Port
1
In1
1
En
2
In2
2
Cmd

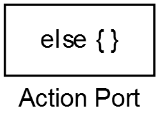
else { }
Action Port

When Vehicle Speed is lesser than thershold, pass on Manual Torque Command Enable and Manual Torque Command values

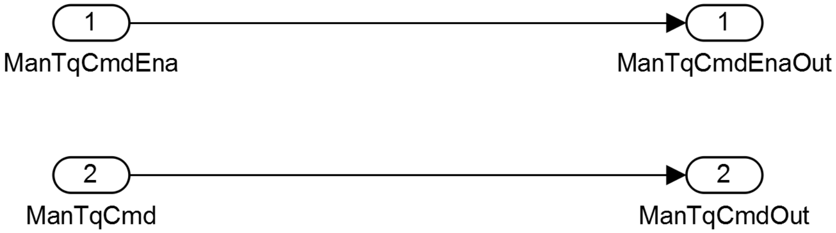
1
ManTqCmdEna
1
ManTqCmdEnaOut
2
ManTqCmd
2
ManTqCmdOut

When vehicle Speed is lesser than thershold, NTC status is set to PREPASSED irrespective of PinionCentrLrnEna and PinionCentrLrnCmd values

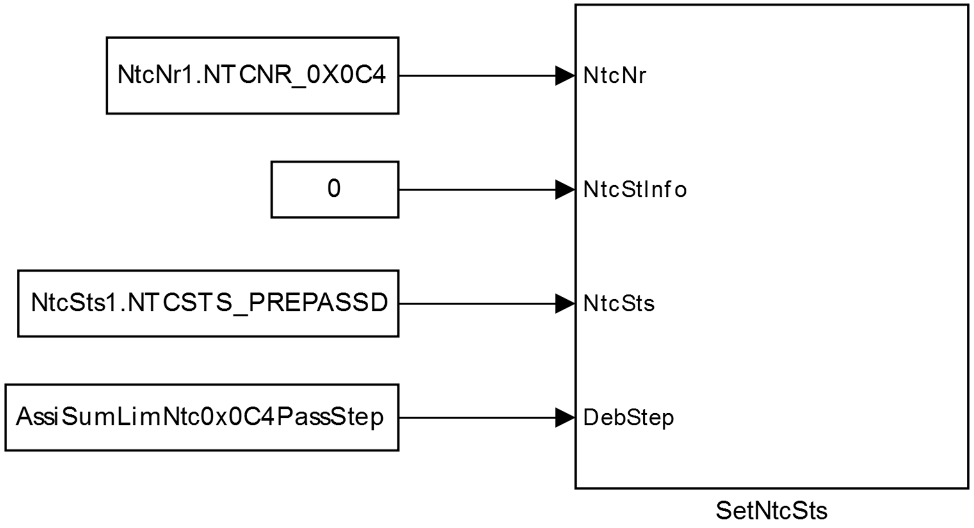
NtcNr1.NTCNR_0X0C4
0
NtcSts1.NTCSTS_PREPASSD
AssiSumLimNtc0x0C4PassStep
NtcNr
NtcStInfo
NtcSts
DebStep
SetNtcSts

When Vehicle Speed is greater than thershold, set Manual Torque Command Enable Out to False and Manual Torque Command Out to 0

When Vehicle Speed is greater than thershold, learn Pinion Center Enable and Pinion Center Command to set NTC status.

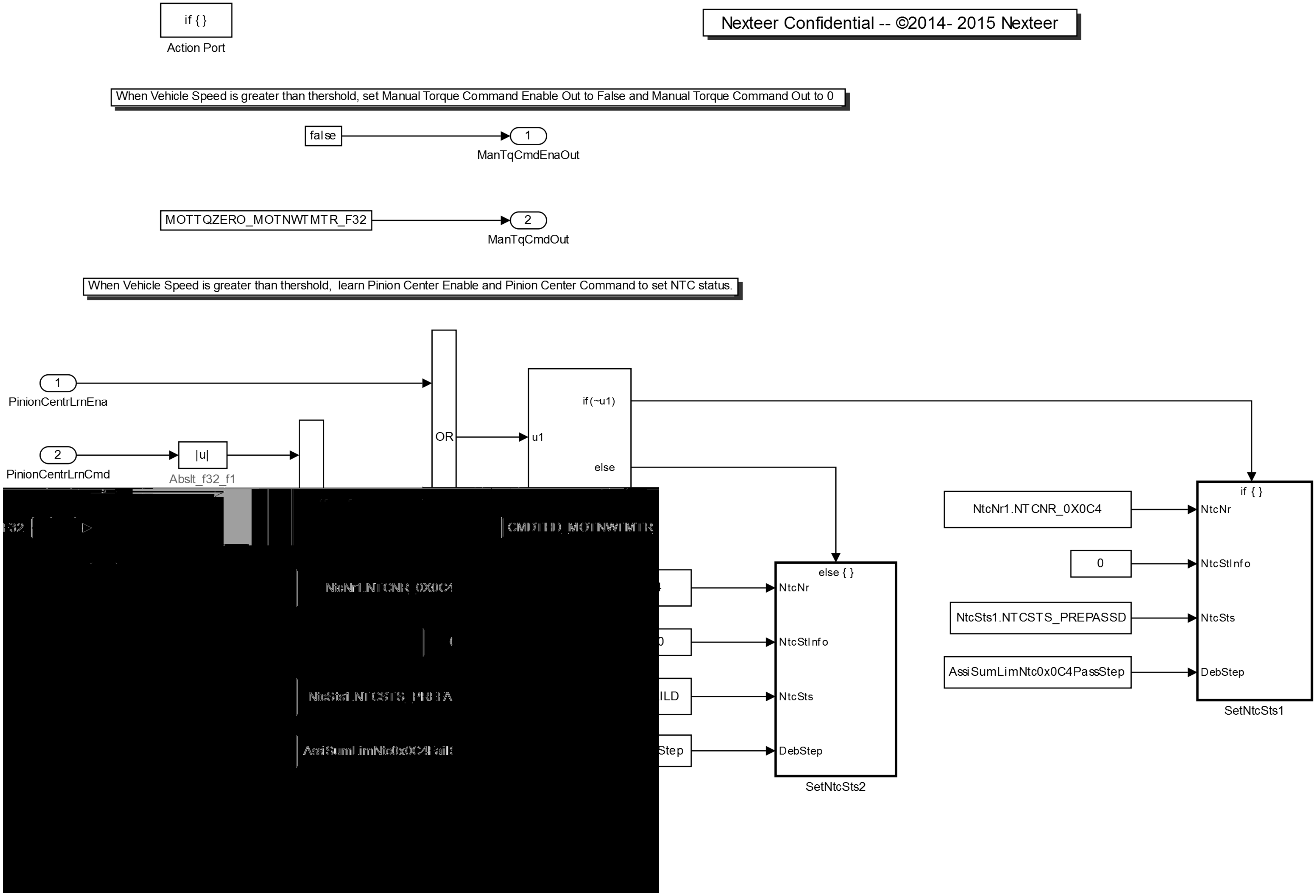
if { }
Action Port
false
1
ManTqCmdEnaOut
MOTTQZERO_MOTNWTMTR_F32
2
ManTqCmdOut
1
PinionCentrLrnEna
2
PinionCentrLrnCmd
|u|
Abslt_f32_f1
OR
u1
if(~u1)
else
else { }
NtcNr
NtcStInfo
NtcSts
DebStep
SetNtcSts2
NtcNr1.NTCNR_0X0C4
0
NtcSts1.NTCSTS_PREPASSD
AssiSumLimNtc0x0C4PassStep
if { }
NtcNr
NtcStInfo
NtcSts
DebStep
SetNtcSts1

[redacted]

This model writes to two module-level static variables visible to Periodic1 runnable. It only takes a snapshot of vehicle conditions. It may allow a reqested enable and return an error code of "OK", but the periodic it feeds must continuously watch for the possiblity of vehicle rolling while enabled.

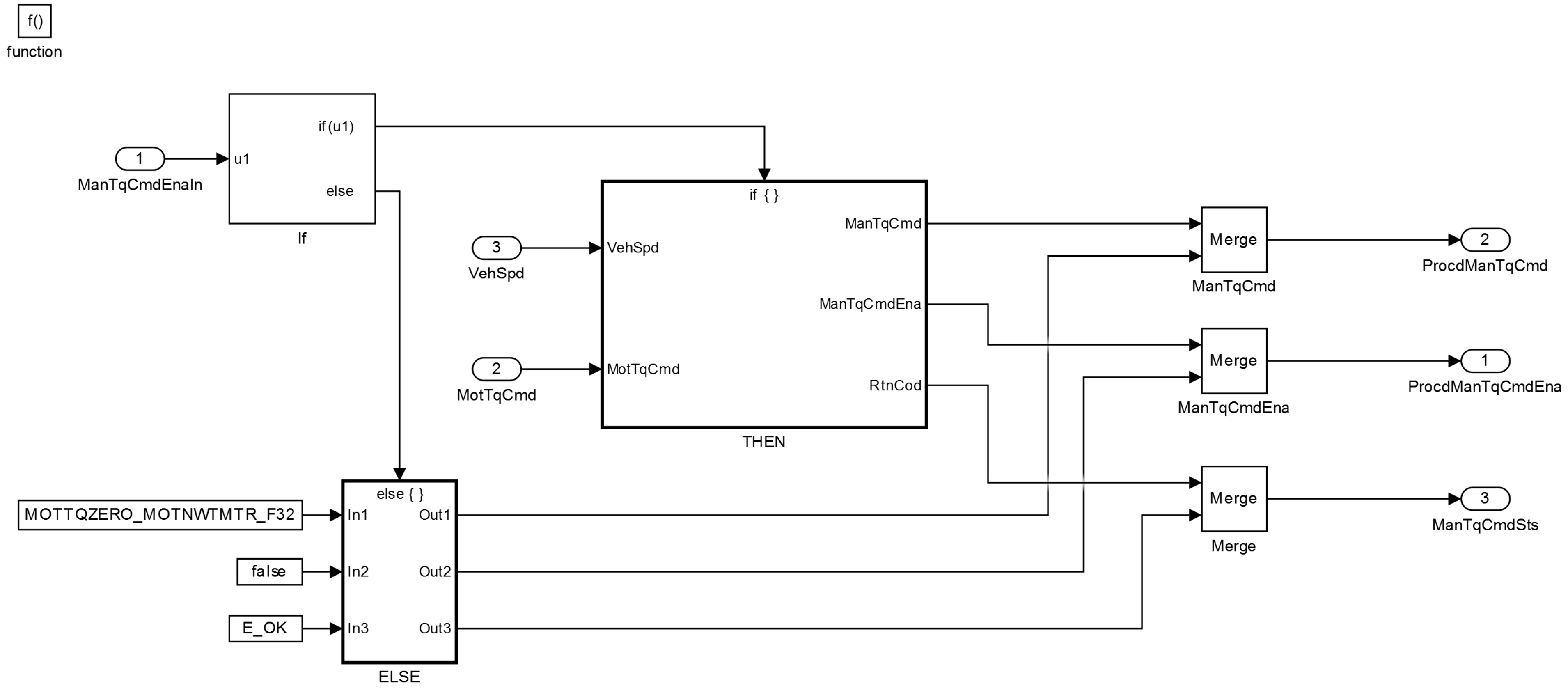
f()
function
1
ManTqCmdEnaIn
u1
if(u1)
else
If
if { }
3
VehSpd
VehSpd
2
MotTqCmd
MotTqCmd
ManTqCmd
ManTqCmdEna
RtnCod
THEN
Merge
ManTqCmd
2
ProcdManTqCmd
Merge
ManTqCmdEna
1
ProcdManTqCmdEna
Merge
Merge
3
ManTqCmdSts
MOTTQZERO_MOTNWTMTR_F32
false
E_OK
else { }
In1
In2
In3
Out1
Out2
Out3
ELSE

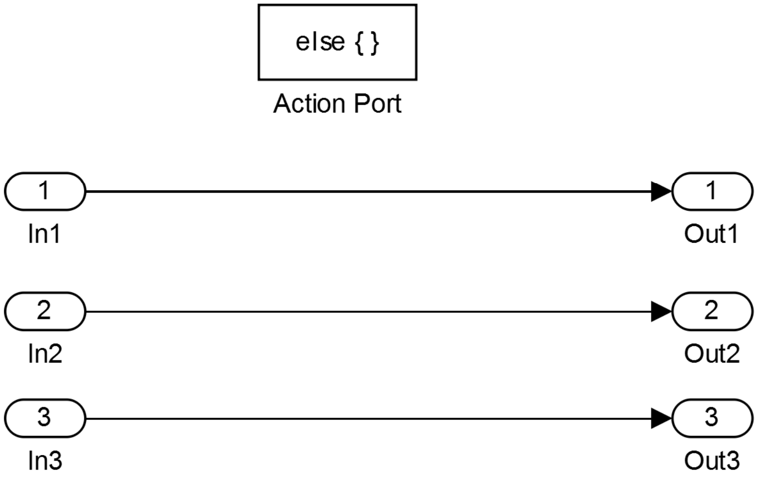
else { }
Action Port
1
In1
1
Out1
2
In2
2
Out2
3
In3
3
Out3

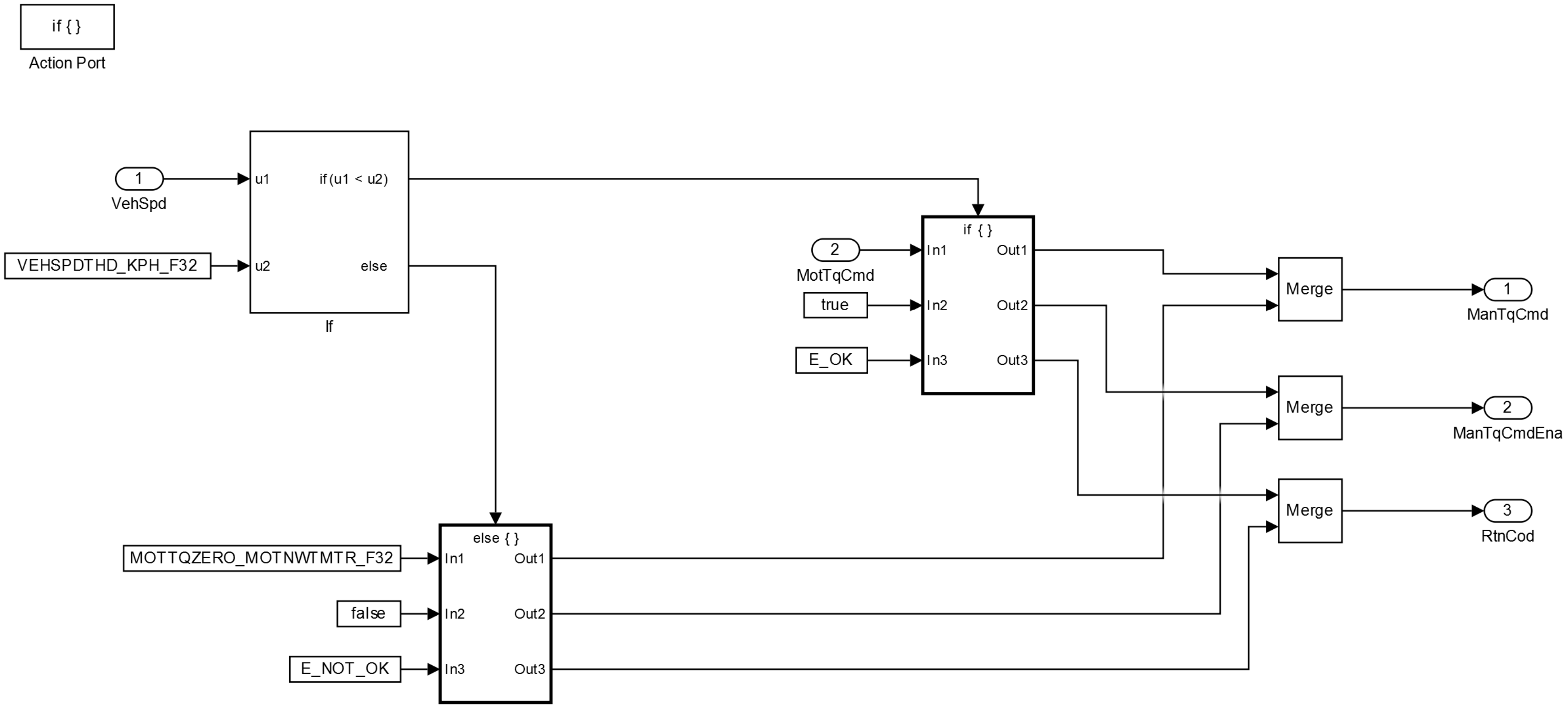
if { }
Action Port
1
VehSpd
VEHSPDTHD_KPH_F32
u1
u2
if(u1 < u2)
else
If
2
MotTqCmd
true
E_OK
if { }
In1
In2
In3
Out1
Out2
Out3
MOTTQZERO_MOTNWTMTR_F32
false
E_NOT_OK
else { }
In1
In2
In3
Out1
Out2
Out3
Merge
Merge
Merge
1
ManTqCmd
2
ManTqCmdEna
3
RtnCod

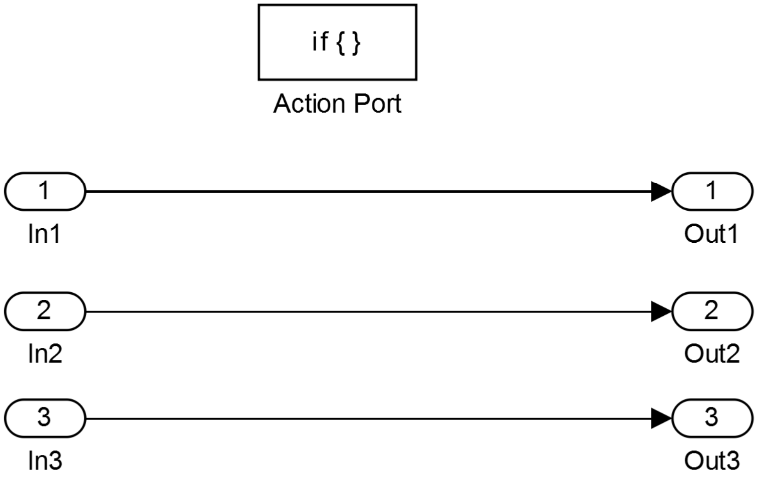
if { }
Action Port
1
In1
1
Out1
2
In2
2
Out2
3
In3
3
Out3

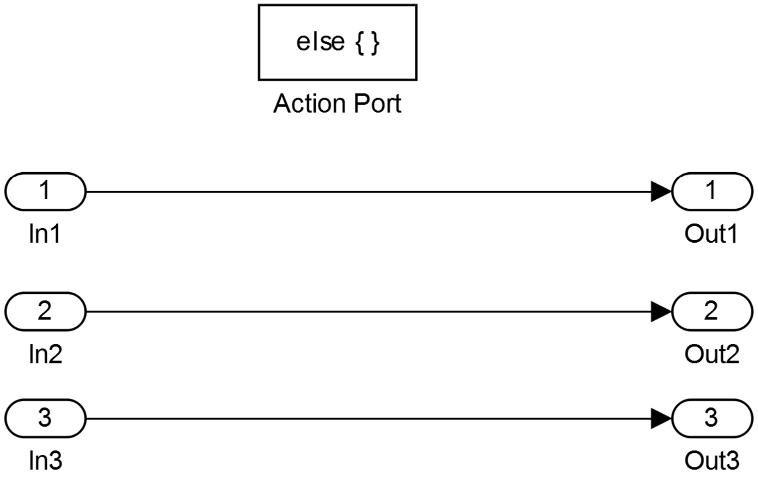
else { }
Action Port
1
In1
1
Out1
2
In2
2
Out2
3
In3
3
Out3

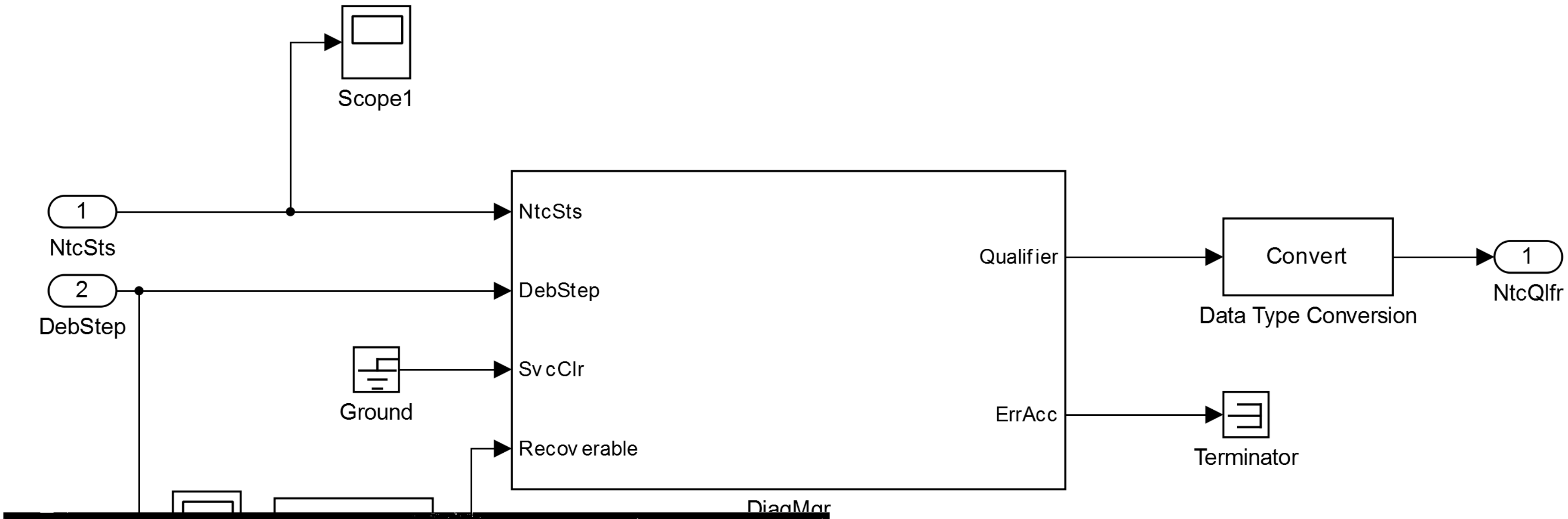
Scope1
1
NtcSts
2
DebStep
Ground
NtcSts
DebStep
SvcClr
Recoverable
Qualifier
ErrAcc
DiagMgr
Convert
Data Type Conversion
1
NtcQlfr
Terminator

[redacted]

e here for Simulation purpose only. Do not Code this block

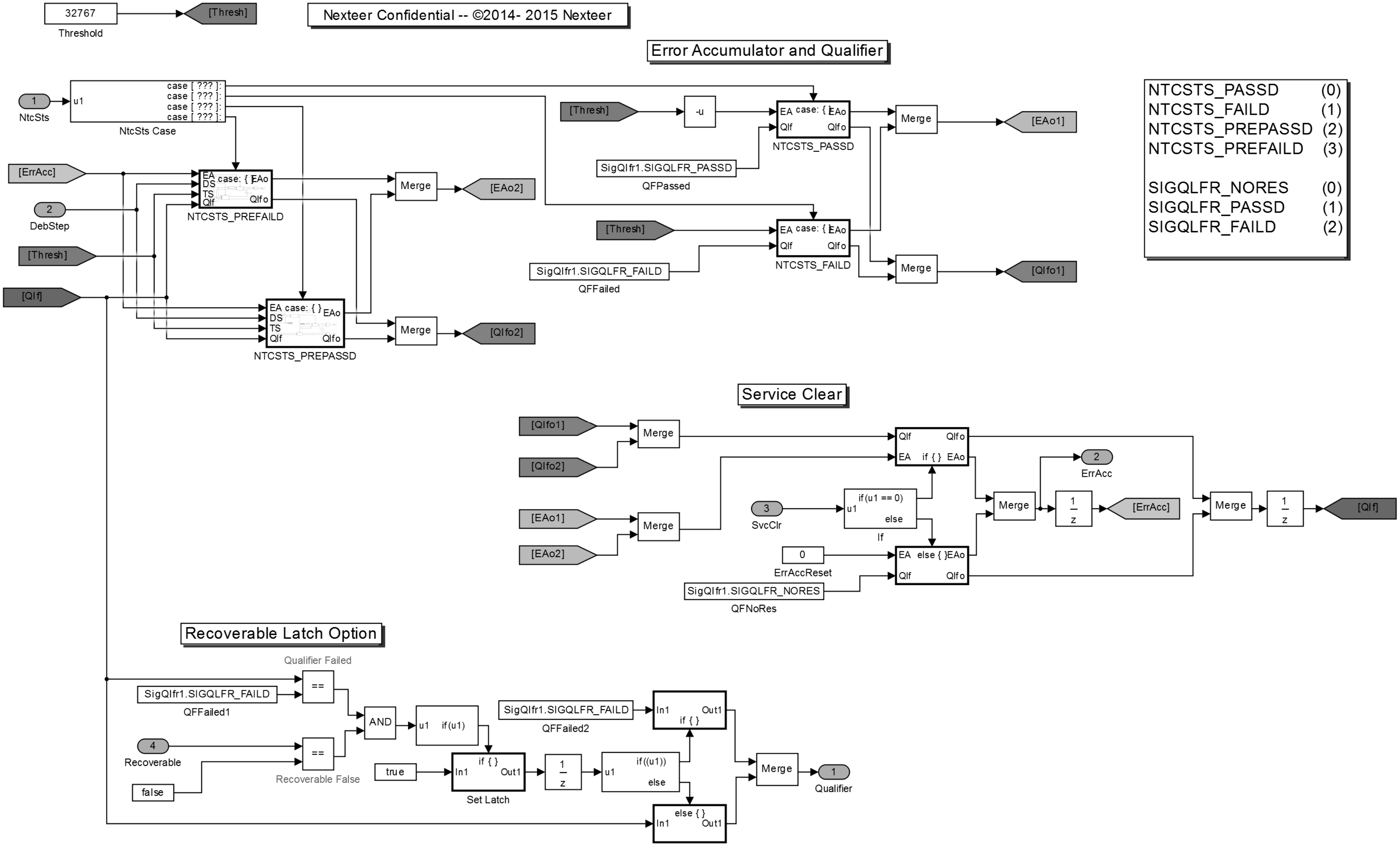
32767
Threshold
[Thresh]
Error Accumulator and Qualifier
1
NtcSts
u1
case [???]:
NtcSts Case
[ErrAcc]
2
DebStep
[Thresh]
[Qlf]
EA
DS
TS
Qlf
case: { }
EAo
Qlfo
NTCSTS_PREFAILD
NTCSTS_PREPASSD
Merge
[EAo2]
[Qlfo2]
-u
SigQlfr1.SIGQLFR_PASSD
QFPassed
NTCSTS_PASSD
SigQlfr1.SIGQLFR_FAILD
QFFailed
NTCSTS_FAILD
[EAo1]
[Qlfo1]
Service Clear
[Qlfo1]
[Qlfo2]
[EAo1]
[EAo2]
if { }
3
SvcClr
if(u1 == 0)
else
If
0
ErrAccReset
else { }
SigQlfr1.SIGQLFR_NORES
QFNoRes
2
ErrAcc
1/z
[ErrAcc]
[Qlf]
Recoverable Latch Option
Qualifier Failed
==
SigQlfr1.SIGQLFR_FAILD
QFFailed1
4
Recoverable
false
Recoverable False
AND
if(u1)
true
In1
Out1
Set Latch
if((u1))
SigQlfr1.SIGQLFR_FAILD
QFFailed2
1
Qualifier

NTCSTS_PASSD	(0)
NTCSTS_FAILD	(1)
NTCSTS_PREPASSD	(2)
NTCSTS_PREFAILD	(3)
SIGQLFR_NORES	(0)
SIGQLFR_PASSD	(1)
SIGQLFR_FAILD	(2)

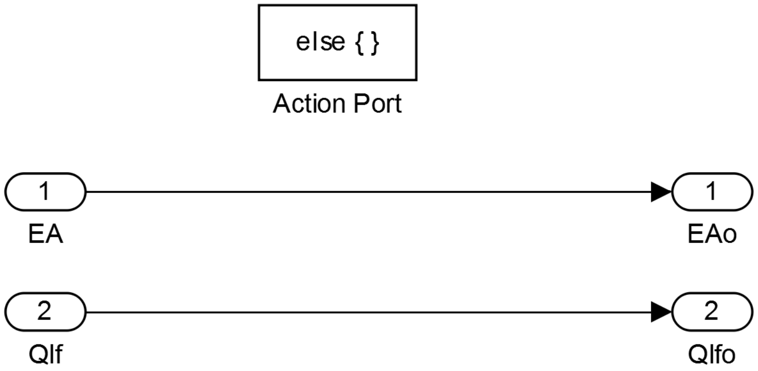
else { }
Action Port
1
EA
1
EAo
2
Qlf
2
Qlfo

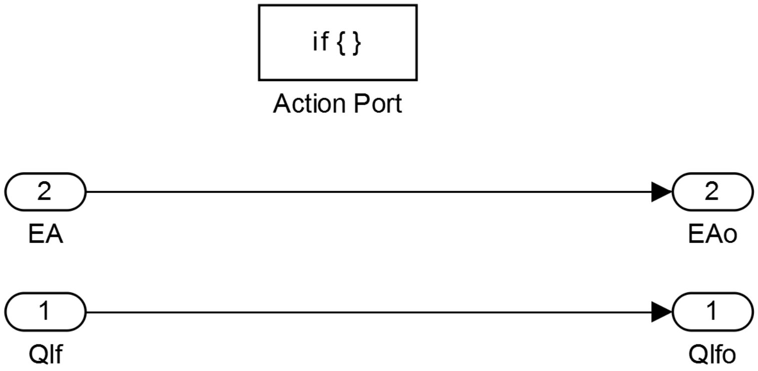
if { }
Action Port
2
EA
2
EAo
1
QIf
1
QIfo

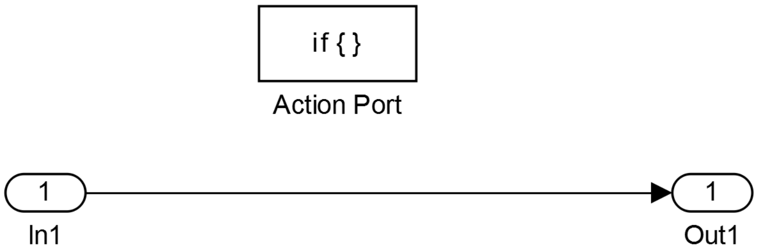
if { }
Action Port
1
In1
1
Out1

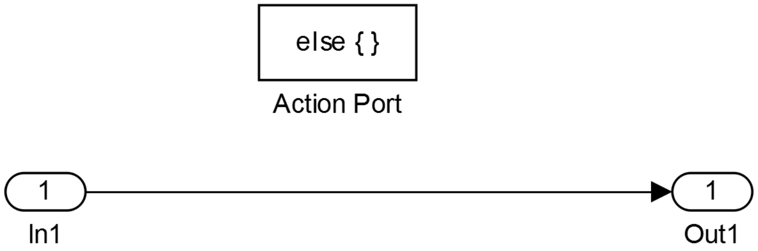
else { }
Action Port
1
In1
1
Out1

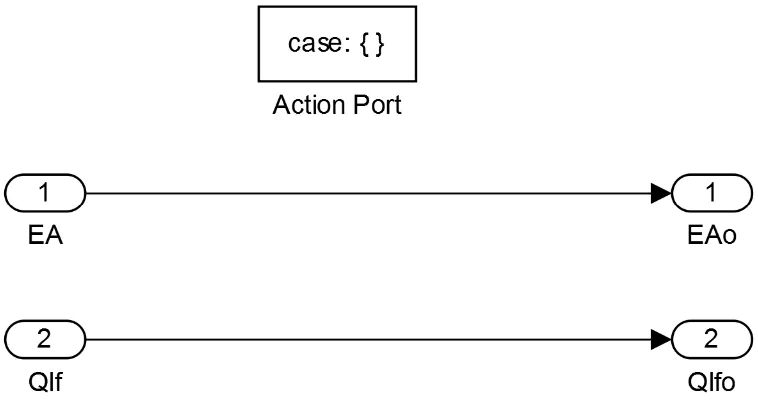
case: { }
Action Port
1
EA
1
EAo
2
QIf
2
QIfo

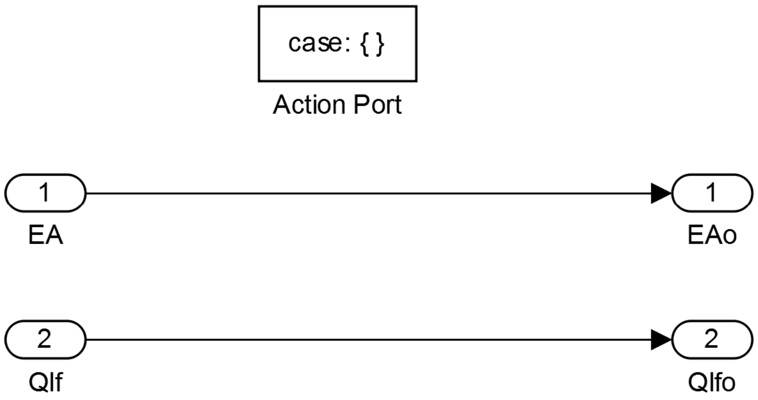
case: { }
Action Port
1
EA
1
EAo
2
QIf
2
QIfo

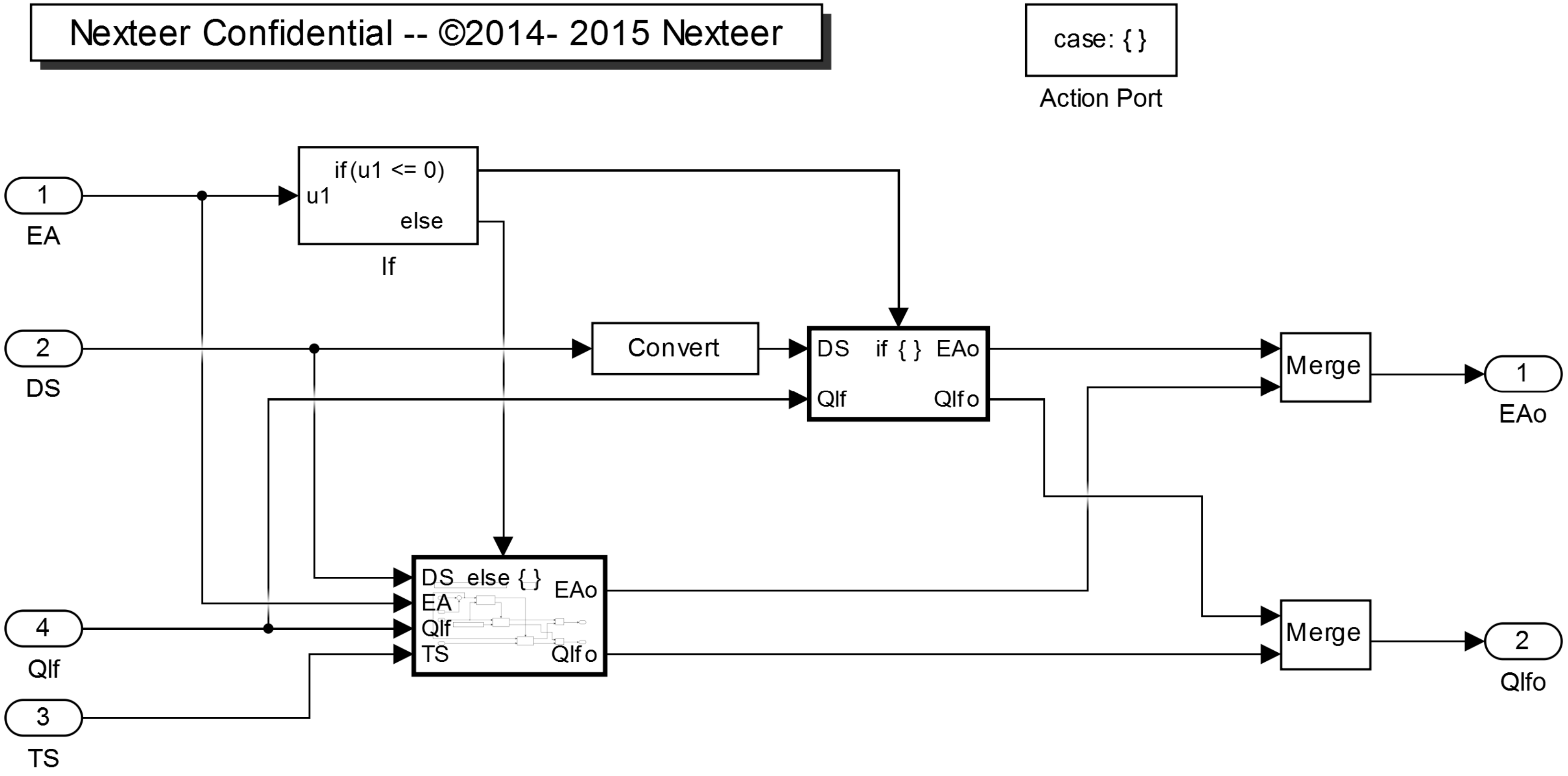
case: { }
Action Port
1
EA
2
DS
4
QIf
3
TS
if(u1 <= 0)
u1
else
If
Convert
DS
if { }
EAo
QIf
QIfo
DS
else { }
EA
QIf
TS
EAo
QIfo
Merge
Merge
1
EAo
2
QIfo

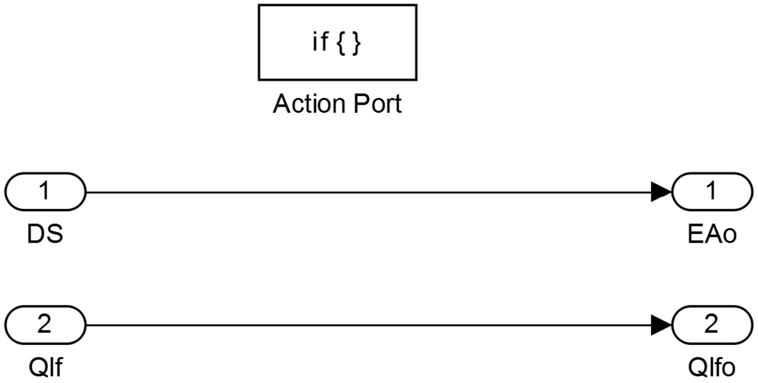
if { }
Action Port
1
DS
1
EAo
2
QIf
2
QIfo

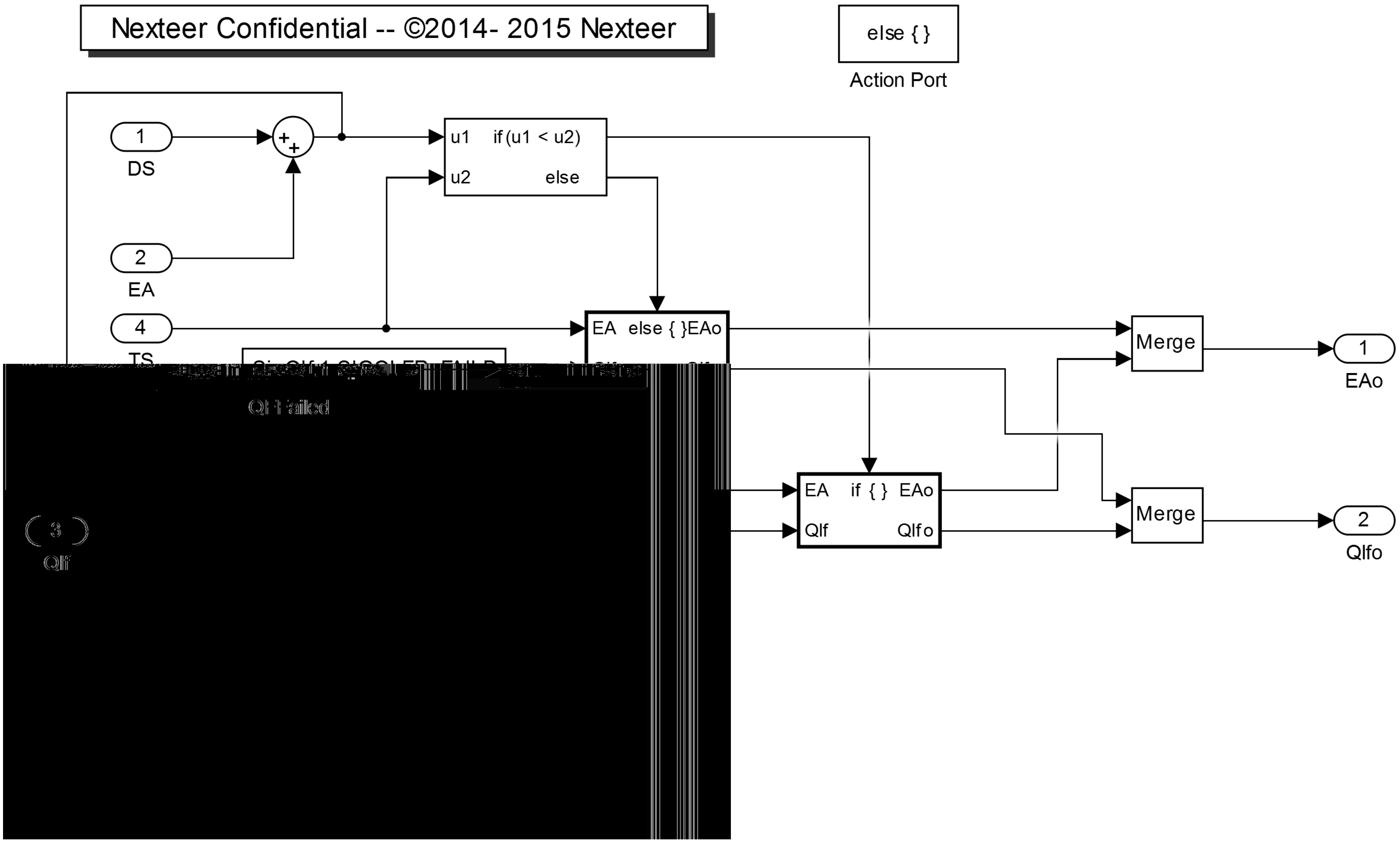
else { }
Action Port
1
DS
2
EA
4
TS
+
+
u1
if(u1 < u2)
u2
else
EA
else { }
EAo
EA
if { }
EAo
QIf
QIfo
Merge
Merge
1
EAo
2
QIfo

[redacted]

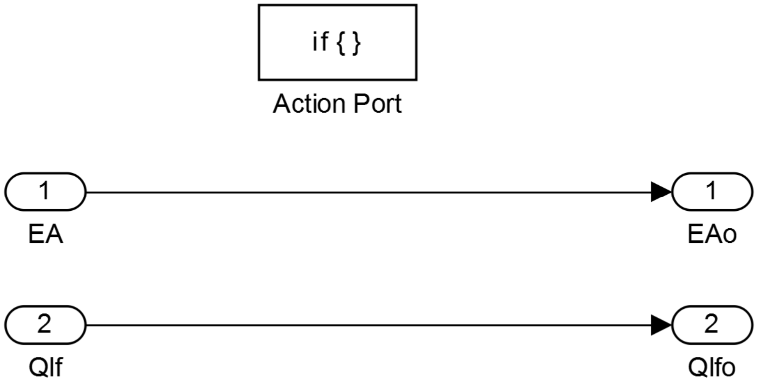
if { }
Action Port
1
EA
1
EAo
2
QIf
2
QIfo

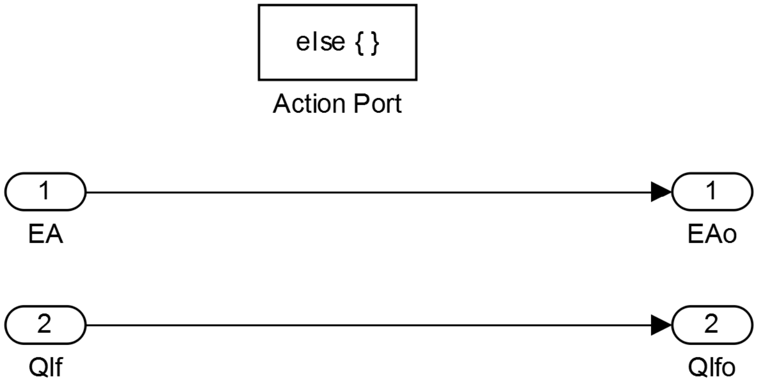
else { }
Action Port
1
EA
1
EAo
2
QIf
2
QIfo

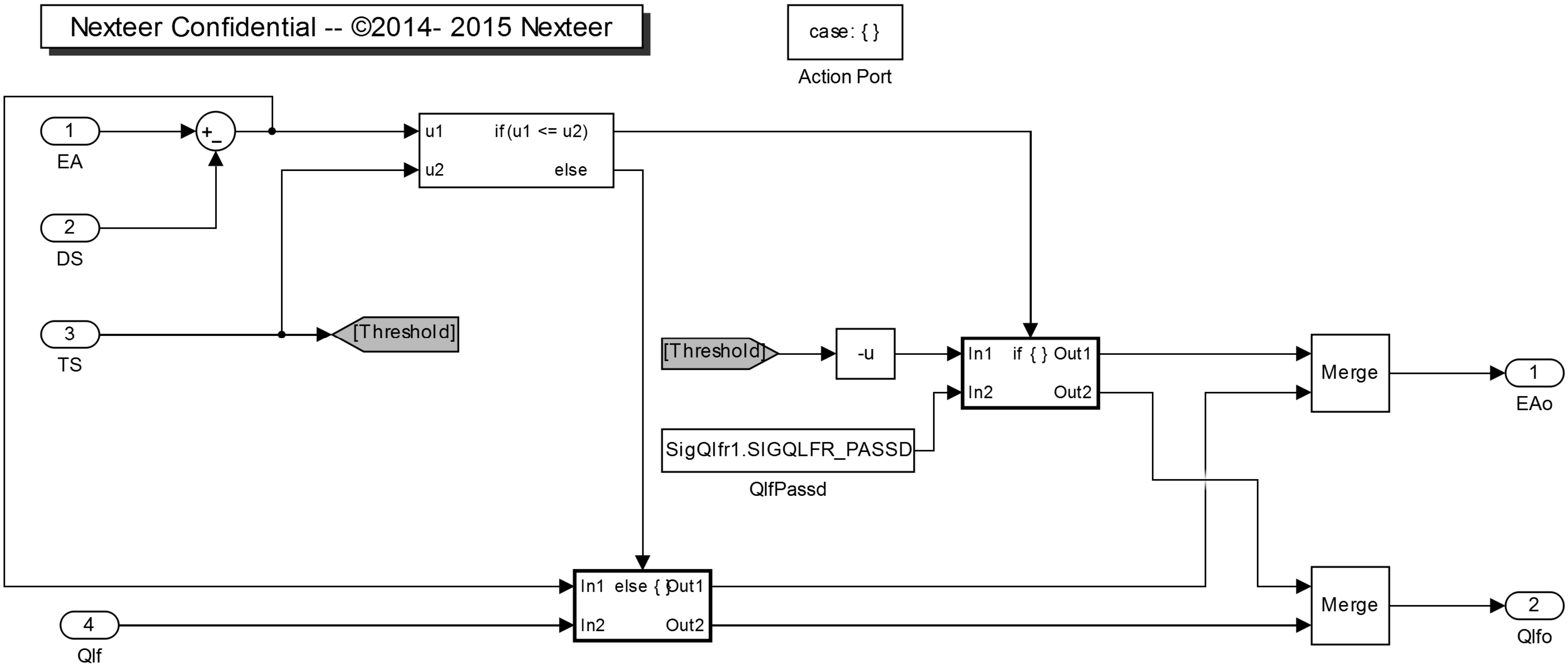
case: { }
Action Port
1
EA
2
DS
3
TS
4
Qlf
+
_
u1
u2
if(u1 <= u2)
else
[Threshold]
[Threshold]
-u
In1
In2
if { }
Out1
Out2
SigQlfr1.SIGQLFR_PASSD
QlfPassd
In1
In2
else { }
Out1
Out2
Merge
Merge
1
EAo
2
Qlfo

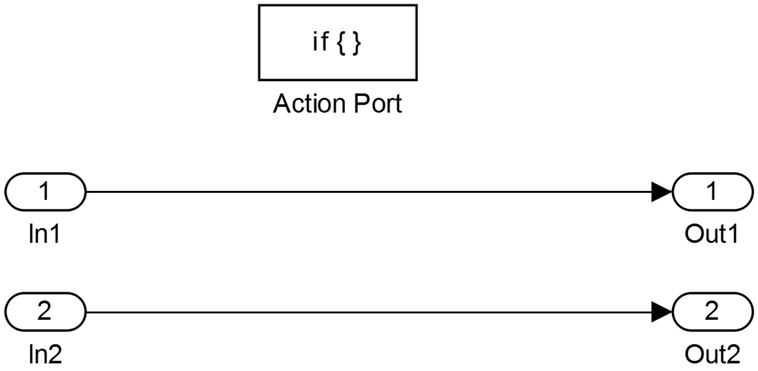
if { }
Action Port
1
In1
1
Out1
2
In2
2
Out2

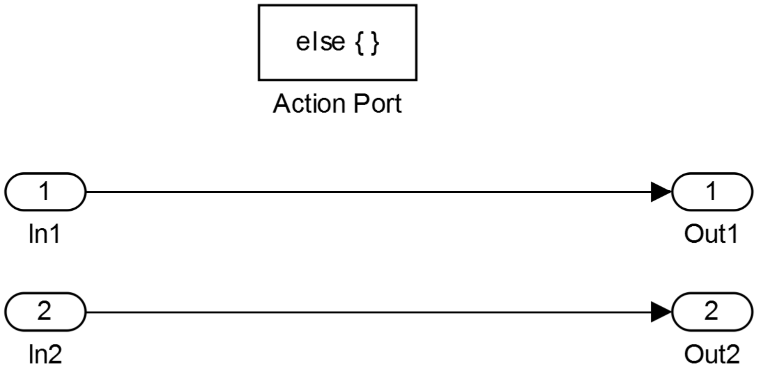
else { }
Action Port
1
In1
1
Out1
2
In2
2
Out2

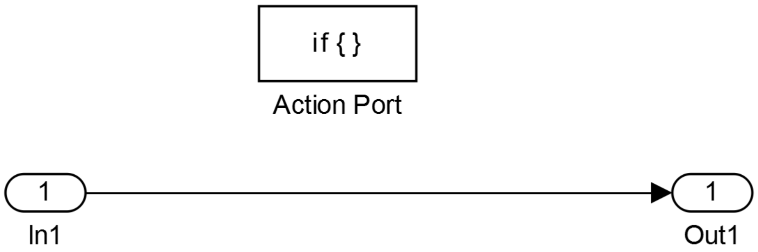
if { }
Action Port
1
In1
1
Out1