NOTES:

REVISIONS						
REV	ZONE	ECO	DESCRIPTION	DRAWN	DATE	APPROVED
-	-	E	-	-	XX/XX/XX	-

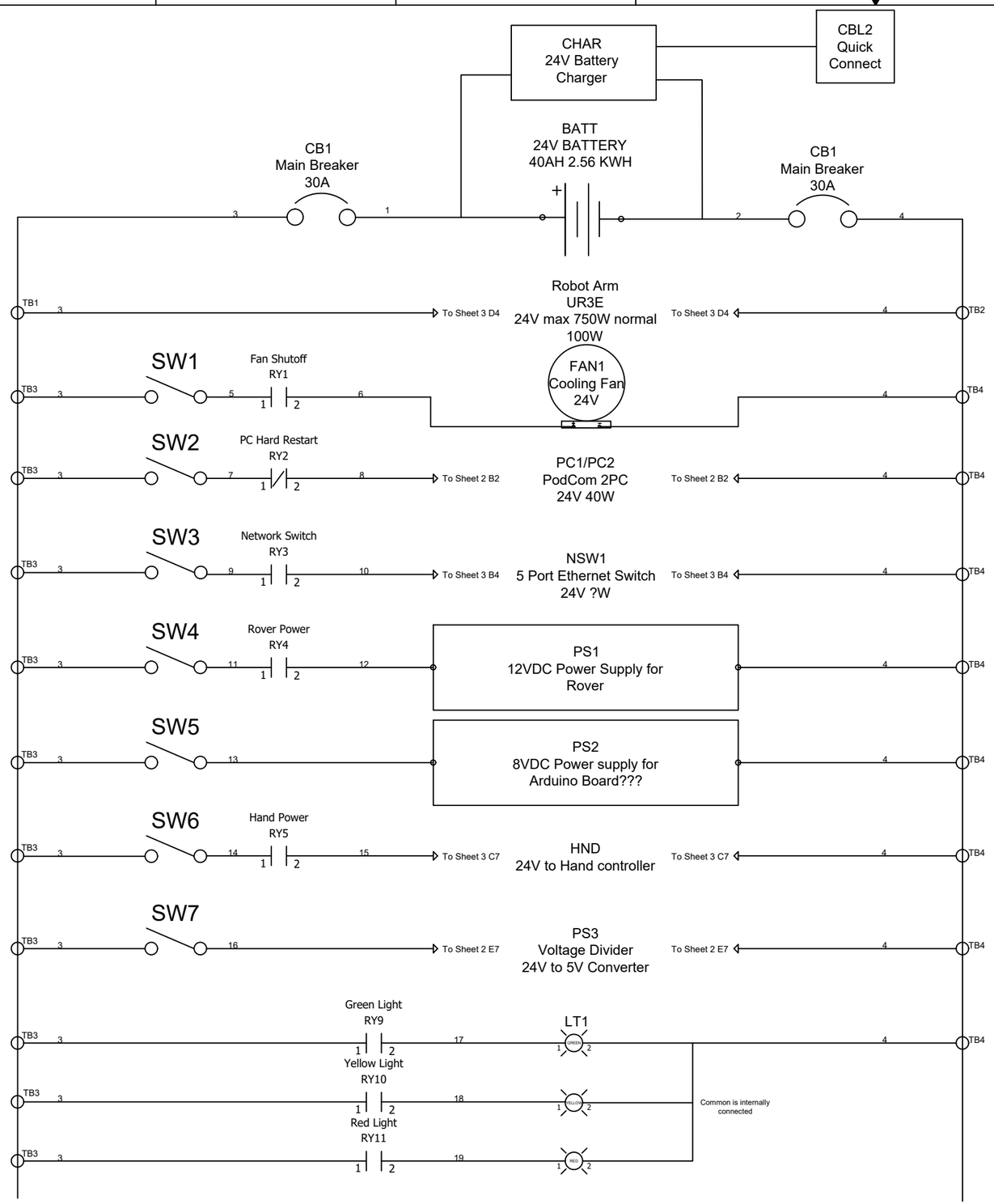

PROPRIETARY - THIS MATERIAL IS CONFIDENTIAL AND CONTAINS PROPRIETARY INFORMATION, TRADE SECRETS, INTELLECTUAL PROPERTY RIGHTS AND OTHER RIGHTS WHICH ARE THE SOLE AND EXCLUSIVE PROPERTY OF FAIRBANKS MORSE DEFENSE. POSSESSION OF THIS MATERIAL DOES NOT CONVEY OR TRANSFER ANY RIGHTS THERETO AND ANY REPRODUCTION, USE, COPYING OR DISCLOSURE TO OTHERS IS FORBIDDEN WITHOUT THE PRIOR WRITTEN CONSENT OF A DULY AUTHORIZED REPRESENTATIVE OF FAIRBANKS MORSE DEFENSE.

DIVERSION CONTRARY TO US EXPORT LAW IS PROHIBITED

UNLESS OTHERWISE SPECIFIED:
DIMENSIONS ARE IN INCHES
MACHINING TOLERANCES
DECIMALS .X ±.030 .XX ±.010 .XXX±.005
FRACTIONS ±1/64
ANGULAR ±0.5°
MACHINED SURFACES √ 125 Ra
PARTS TO BE FREE FROM BURRS AND SHARP CORNERS
INCH THREAD CLASS TO BE 2A AND 2B METRIC THREAD TOLERANCE ISO 965-1 & 2 CLASS 6g/6h

EXPORT CONTROL: XXX
INTERPRET DRAWING TO THE LATEST EDITION OF ASME STD. Y14.24, Y14.100, Y14.35M
GEOMETRIC DIMENSIONING AND TOLERANCING WHERE NOTED PER ASME Y14.5
NON-MACHINED FEATURES: CUTTING, FORMING & WELDING TOLERANCE ± 0.060
NON-MACHINED FEATURES: CUTTING, FORMING & WELDING ANGULAR TOLERANCE ±2°
MATERIAL: N/A

THIRD ANGLE PROJECTION

DRAWN: ----	DATE: xx/xx/xx	
CHECK: ---	DATE: xx/xx/xx	
APPROVED: ---	DATE: xx/xx/xx	
REF. DRAWING: N/A		
INITIAL RELEASE: EXXXXXX	RELEASE DATE: XX/XX/XXXX	

FAIRBANKS MORSE DEFENSE

TITLE
Robot
Main Power and UR Controller

SIZE	CAGE CODE	DRAWING NO.	REV.
D	7PZX0	XXX	0
SCALE N/A	CALC.WT. N/A	SHEET 1 OF 3	

BF3009-5 A