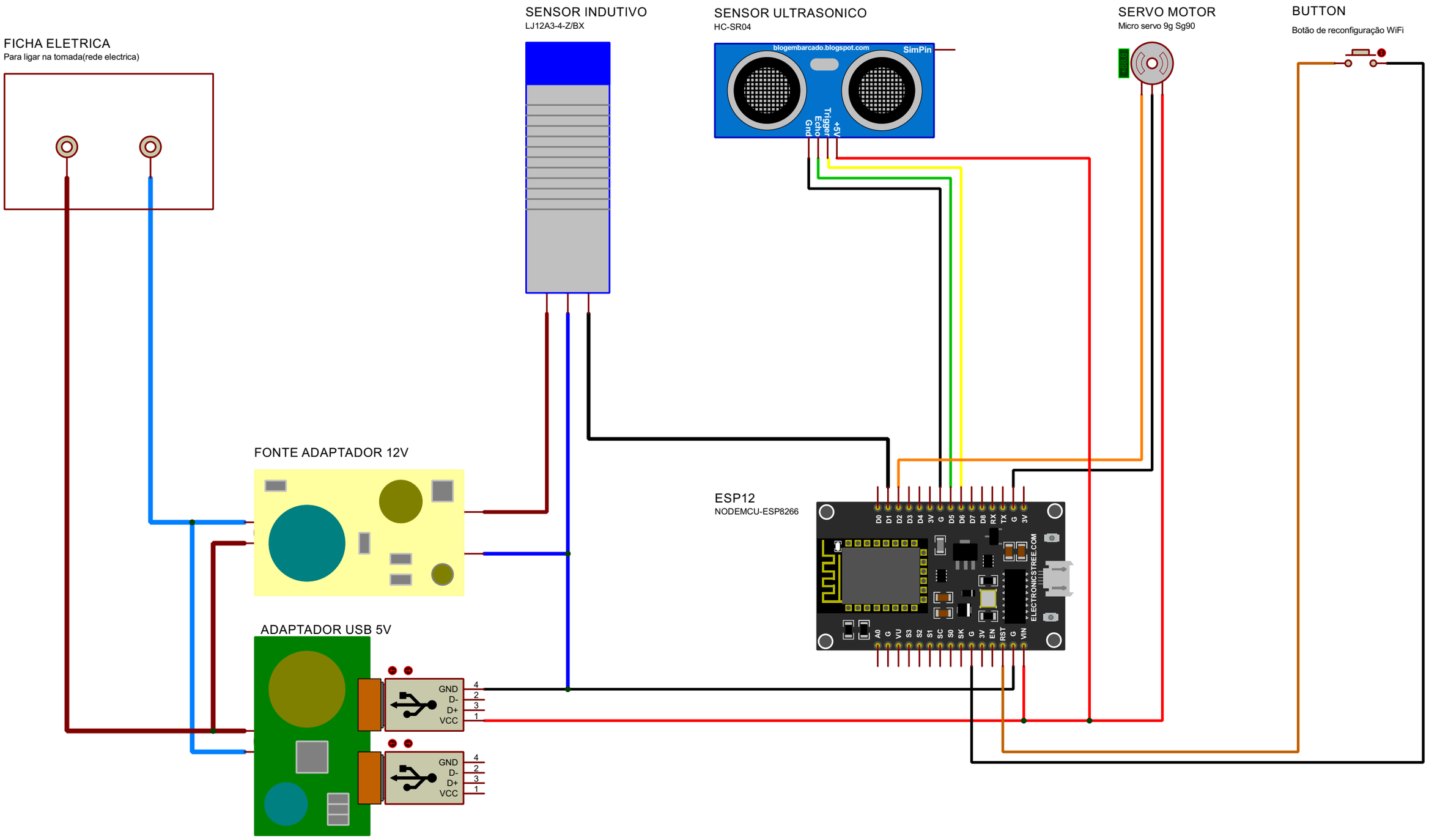

FILE NAME: swiss system circuit.pdsprj	DATE: 4/21/2024
DESIGN TITLE: swiss system circuit.pdsprj	PAGE: 1 of 1
PATH: C:\Users\António Castelo\Desktop\TCC - Augusta & Nataniel\swiss	
BY: @AUTHOR REV:@REV	TIME: 8:46:20 AM