x_1 | x_2 | x_3 | x_4 | x_5 | x_6 | x_7

I born in MH, so I speak ---

$t=1$ | $t=2$ | 3 | 4 | 5 | 6 | 7

I born in MH but grew up in KA. So I speak ...

x_1 2 3 4 5 6 7 6 7

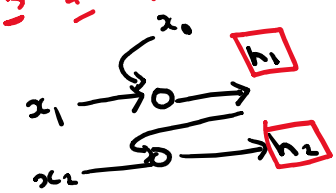

$10 \times 0.1 = 1$

90% forget

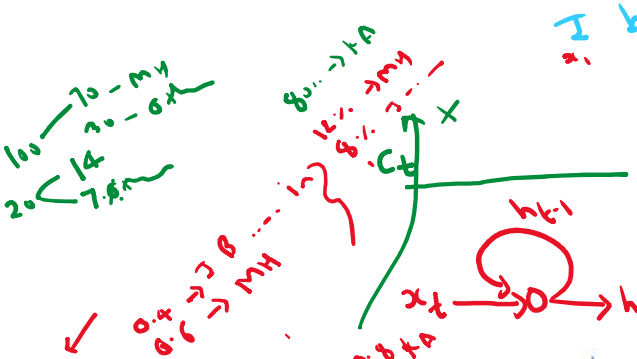

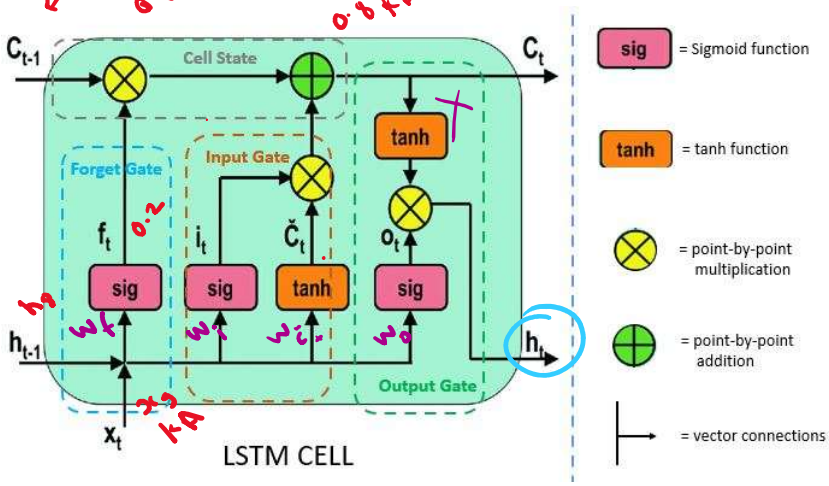

① Forget Gate
② Input Gate
③ output Gate

$h_1 = I$

$10 \rightarrow 5$

0.5

$h_0 \rightarrow$

x_1

Current time step input $= x_t$
prev. hidden $= h_{t-1}$
prev. cell $= c_{t-1}$

① Forget Gate:

$$f_t = \sigma\left(W_f[x_t, h_{t-1}] + b_f\right)$$

$$c_t = c_{t-1} \times f_t$$

② Input Gate:

$$\tilde{C}_t = \tanh\left(W_c[x_t, h_{t-1}] + b_c\right)$$

$$i_t = \sigma\left(W_i[x_t, h_{t-1}] + b_i\right)$$

$$c_t = (c_{t-1} \times f_t) + (\tilde{C}_t \times i_t)$$

③ output Gate:

$x_1 \; x_2 \; x_3$

$x_t = [1, 2, 3] \times w_1, w_2, w_3$

$h_t = [1, 2, 3]$ $h_1 \; h_2 \; h_3$

$(1w_1 + 2w_2 + 3w_3 + w_4 + 2w_5 + 3w_6 + b)$

sum

σ

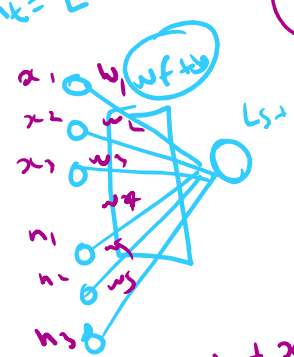

$x_1 w_1 + x_2 w_2 + x_3 w_3 + h_1 w_4 + h_2 w_5 + h_3 w_6 + b = z$

$\sigma(z)$

③ output Gate:

$$o_t = \sigma(w_o[x_t, h_{t-1}] + b_o)$$

$$h_t = o_t * \tanh(c_t)$$