Addis Ababa Science & Technology University

College of Natural & Applied Sciences

Department of Maths, Physics & Statistics

Worksheet 5 for General Physics (Phy1001)

1. What is magnitude of the electric force between two electrons separated by a distance of $2x10^{-15}m$? (Take charge of an electron as $e = -1.6x10^{-19}c$)
2. Suppose the magnitude of the electric force between two protons is $2.3x10^{-26}$ N. What is the distance r between the two protons? (Take charge of a proton as $1.6x10^{-19}c$)
3. Calculate the electric field at a distance of 1m from an isolated point particle with a charge of 2×10^{-9}C?
4. A charge $q_1 = 7\mu C$ is located at the origin , and a second charge $q_2 = -5\mu C$ is located on the x axis ,0.3m from the origin as shown in the figure below. Calculate the total electric field strength due to the two charges at point P, which has coordinates (0, 0.4m)

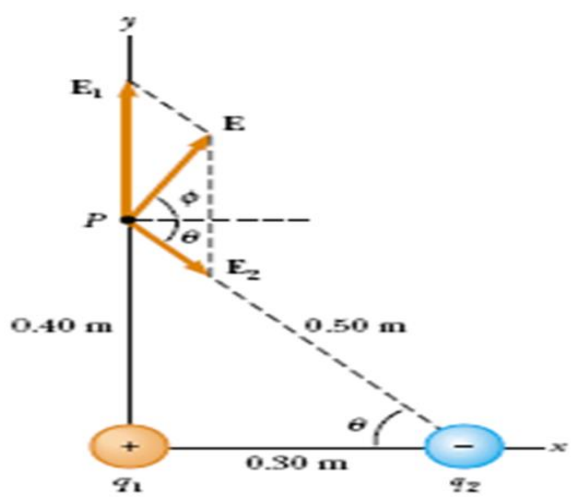

5. Three point charges lie along the *x* axis as shown in Figure below. The positive charge q_1 = 15 μC is at *x* = 2 m, the positive charge q_2 = 6 μC is at the origin, and the resultant force acting on q_3 is zero. What is the *x* coordinate of q_3?

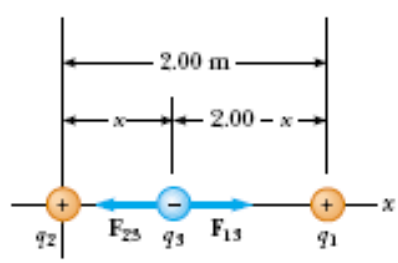

6. Four point charges are located at the corners of a square. Each charge has magnitude 3.2 nC and the square has sides of length 2.00 cm. Find the magnitude of the electric field at the center of the square.
7. Three charges are at the corners of an equilateral triangle, as shown in figure below. Calculate the electric field at a point midway between the two charges on the x – axis

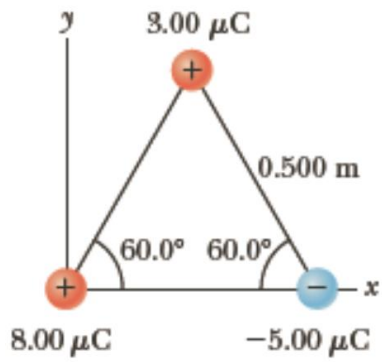

8. Four identical charges, each having a charge of +2μC, are fixed at the corners of a square of side L= 4m as shown in figure below.
   a. Find the electric field at a point P that lies at a distance Z = 2m along the line perpendicular to the plane of the square and passing through the center of the square.
   b. Find the net electric force on a fifth point charge of +4μC, at a point P that lies at Z=2m above the center of the square due to the other four charges.
   c. Calculate the potential energy due to the four charge's distribution located on the square.

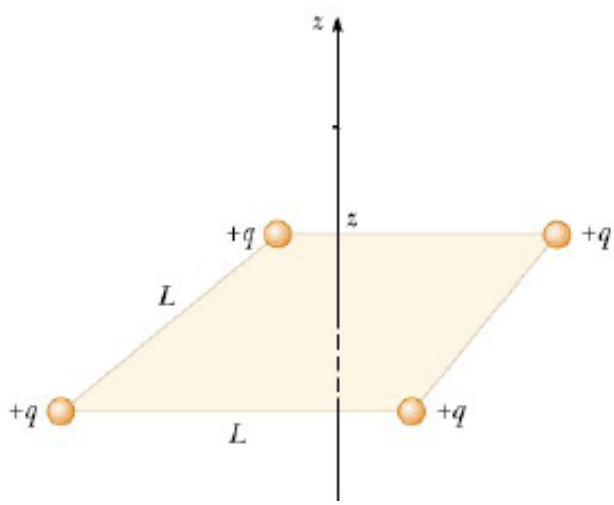

9. Find the electric potential energy in assembling four charges at the vertices of a square of side 1.0 cm, starting each charge from infinity as shown in the figure below

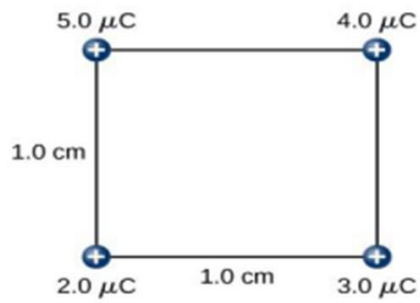

10. Show that the total amount of work required to assemble four identical point charges, each of magnitude q , at the four corners of a square of side length s is $\frac{5.41kq^2}{s}$

11. The two charges in Figure below are separated by a distance d=2cm. Find the electric potential at (a) point A and (b) point B, which is halfway between the charges?

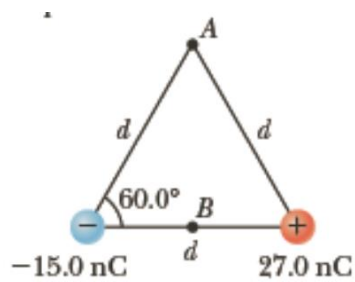

12. Find the total electric potential due to the two charges at the point P, whose coordinates are (4, 0) m?

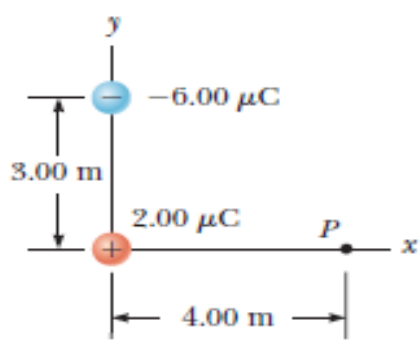

13. a) A small radio receiver uses a battery that delivers a constant current of 0.025A for 3hours. What is the total charge delivered by the battery?
    b) Suppose a student kept her 60W, 120V study lamp turned on from 2pm to 2Am. What is the amount of charge that went through the lamp?

14. Suppose a 16Ω speaker is connected across the output terminal of a power amplifier that delivers 64W power to it. Calculate the amount of current delivered by the speaker?
15. Three resistors R1 = 3 Ω, R2 = 6 Ω and R3 = 9 Ω are connected in parallel with a potential difference of 18.0V. Calculate the total current in the circuit?
16. The current in a circuit loop that has a resistance R_1 is 2.0 A. The current is reduced to 1.6 A when an additional resistor of resistance $R = 3\Omega$ is in series with R_1. What is the value of R_1?
17. Calculate the equivalent resistance between points 1 and 2 of the circuit shown below:

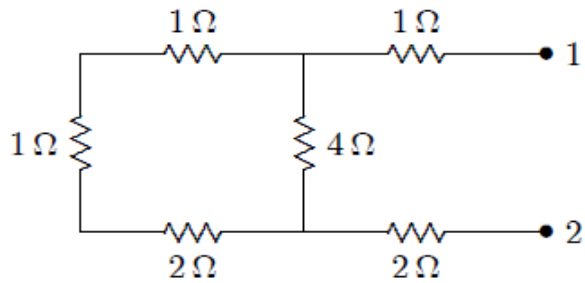

18. Two resistors connected in series have an equivalent resistance of 7Ω. When they are connected in parallel, their equivalent resistance is $\frac{10}{7}\Omega$. What is the resistance of each resistor?
19. Suppose four 20Ω resistors are connected in series and the combination is connected to a 20V battery. What is current in any one of the resistors?

20. Use Kirchhoff's Rules find the currents flowing in the circuit in Figure below

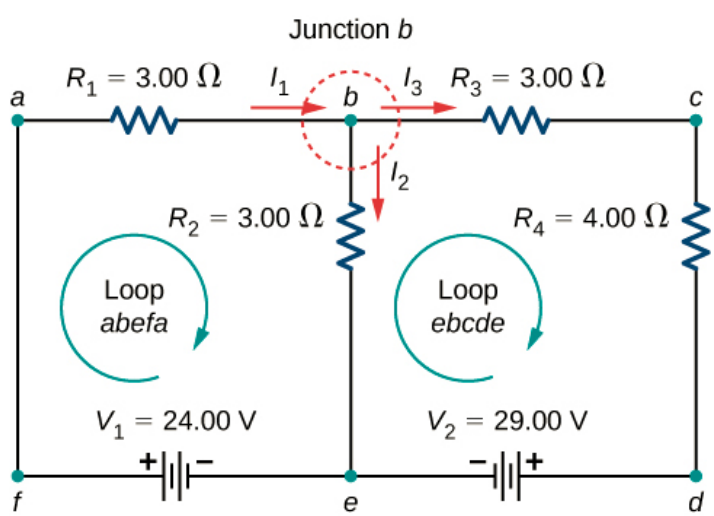

21. Find the unknown currents I_1, I_2, and I flowing in each branch of the circuit shown in Fig below.

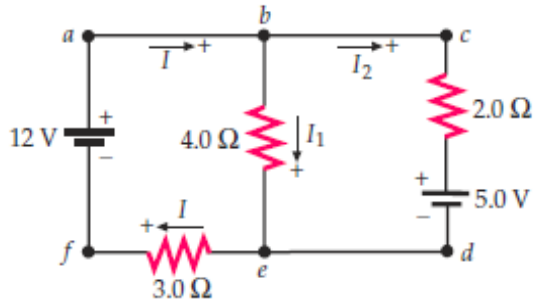

22. Use Kirchhoff's Rules find the currents flowing in the circuit in Figure below

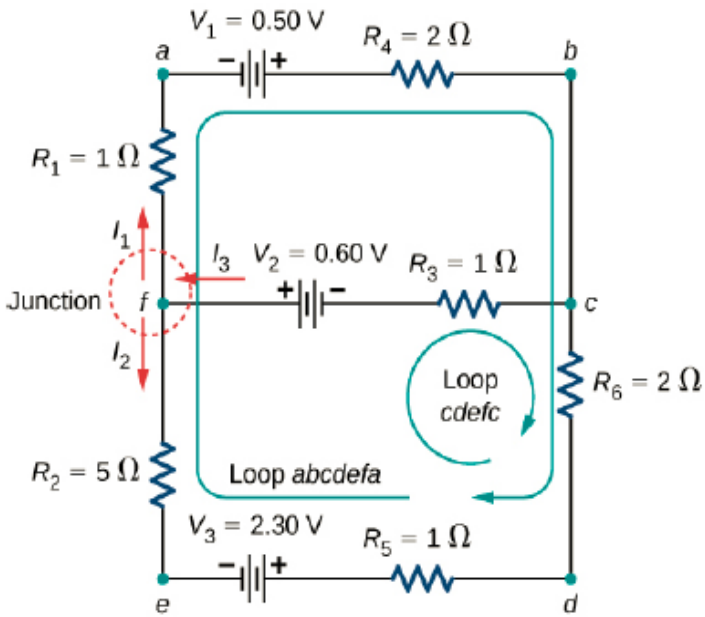

23. A proton moves with a speed of 4 x 10^6 ms^{-1} along the x-axis. It enters a region where there is a magnetic field of magnitude 5 T, directed at an angle of 60^0 to the x-axis and lying in the xy plane. What is the magnitude of magnetic force acting on the proton? (Take charge of proton as $1.6x10^{-19}$c and $Sin60^0$=0.866)

24. A proton moves with a velocity of **v = (2i - 4j + k)** m/s in a region in which the magnetic field is **B = (i + 2j - 3k) T.** calculate the magnetic force experienced by the charge (Take charge of proton as $1.6x10^{-19}$c)