USRP based Cognitive Radio Test-bed using OpenBTS

Abrar Ahmad (113310017)
Swrangsar Basumatary (09d07040)

Department of Electrical Engineering
IIT Bombay, Powai

June 2014

Problem Statement

- To develop a testbed for cognitive radio demonstrating coexistence of primary (licensed) users and secondary (unlicensed users)
- A two frequency testbed (channels used 945 MHz and 955 MHz)
- A four frequency testbed (936 MHz, 943 MHz, 950 MHz, 957 MHz)

Overview of the tasks accomplished in our project

- Cognitive radio?, spectrum holes?
- GNURadio
- Python programming language
- USRP kit
- OpenBTS
- Calls and SMS service on local network
- Spectrum sensing techniques
- Defining problem statement

- Developing a flow chart of the solution to this problem
- Running GNURadio and OpenBTS on the same computer at the same time
- Bash scripting (.sh files)
- Periodogram analysis
- Building a two frequency cognitive radio test bed
- Building a four frequency cognitive radio test bed

Hardware and software used

- GNURadio
- OpenBTS
- USRP N210 Kits
- GSM mobile phones with SIM cards
- Computers

Setup for the two-frequency testbed

Setup for the four-frequency testbed

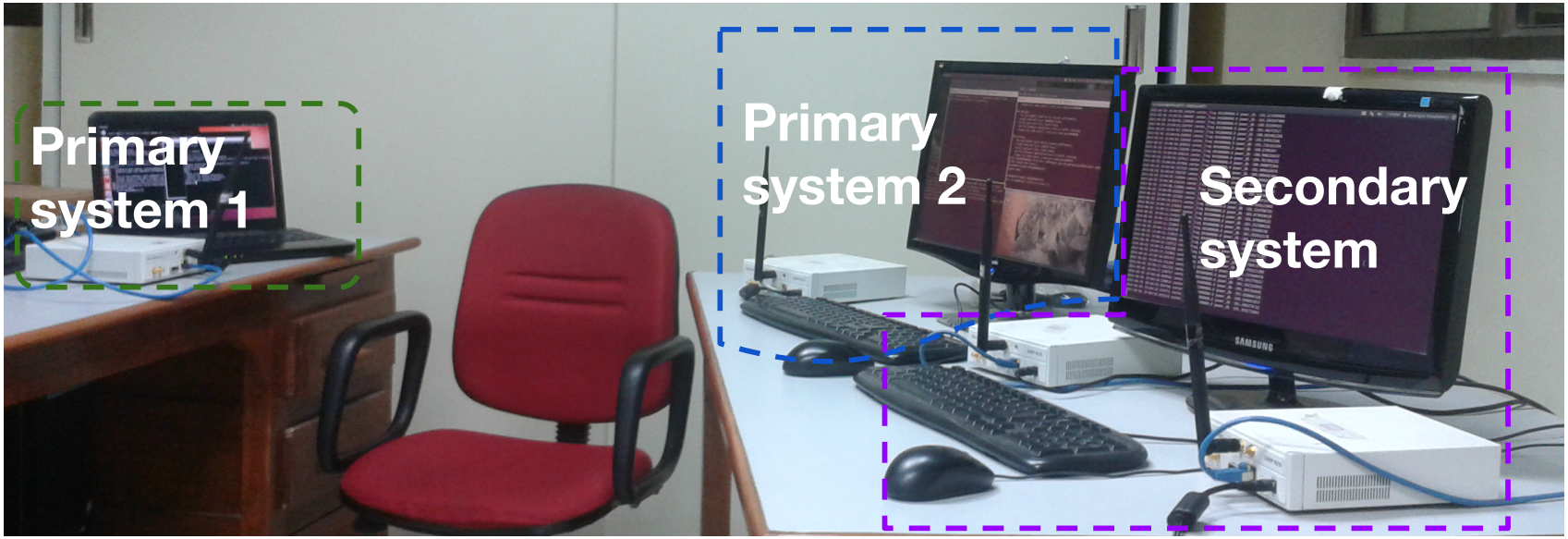

Cognitive Radio

- What is Cognitive Radio?

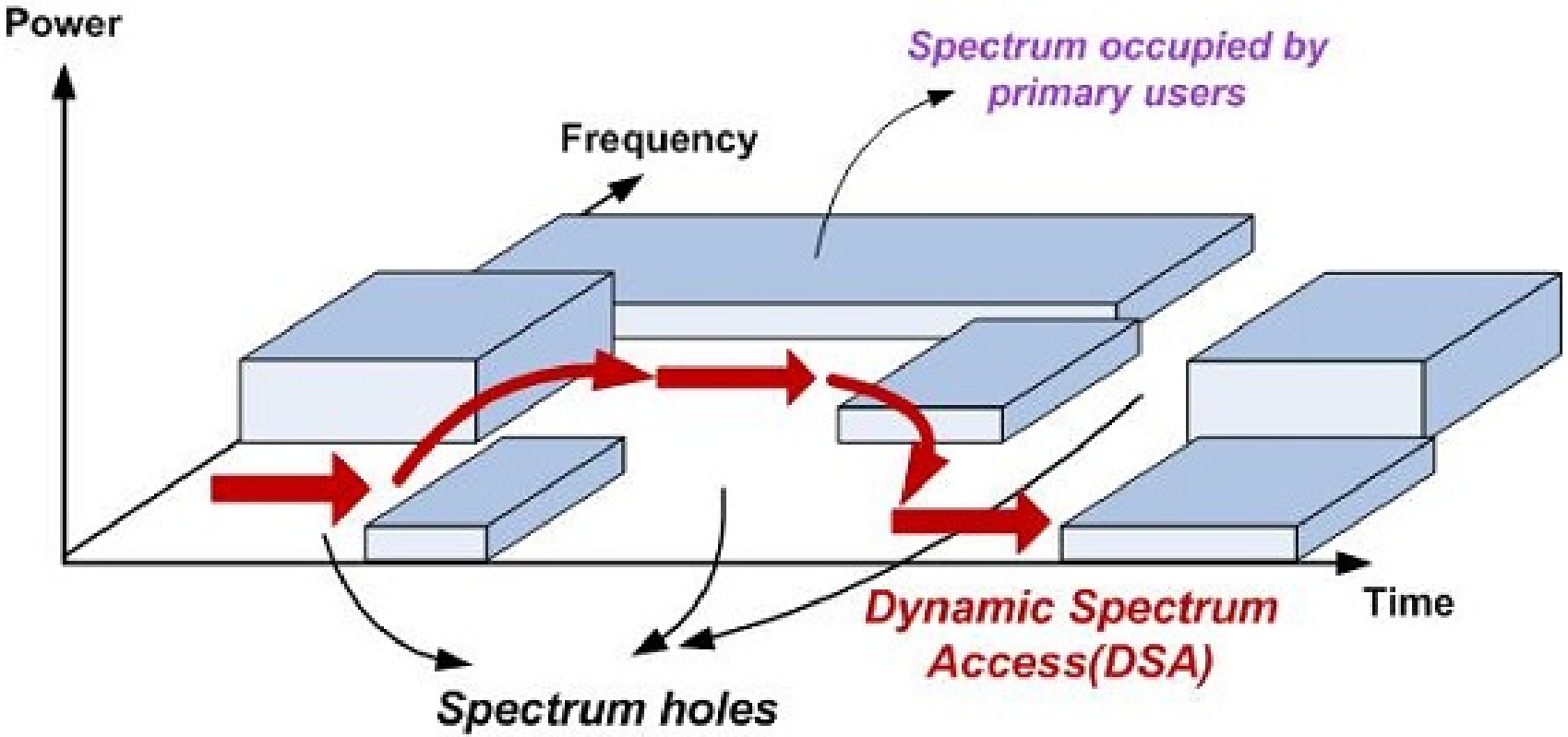

Source: http://www.brunel.ac.uk/__data/assets/image/0011/237539/Abdullah-Masrub1.jpg

GSM

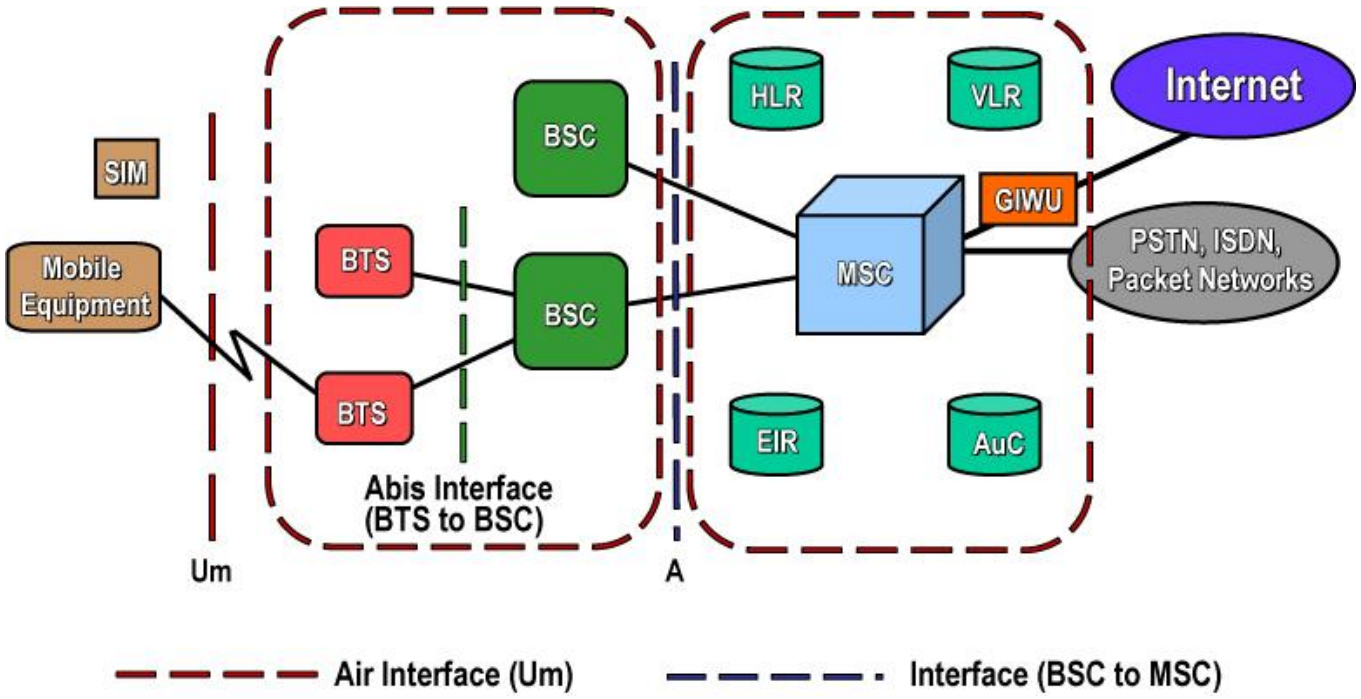

Source: http://www.hill2dot0.com/wiki/index.php?title=Image:G2407_GSM-Architecture.jpg

Software Defined Radio

- What is software defined radio?
- Block Diagram:

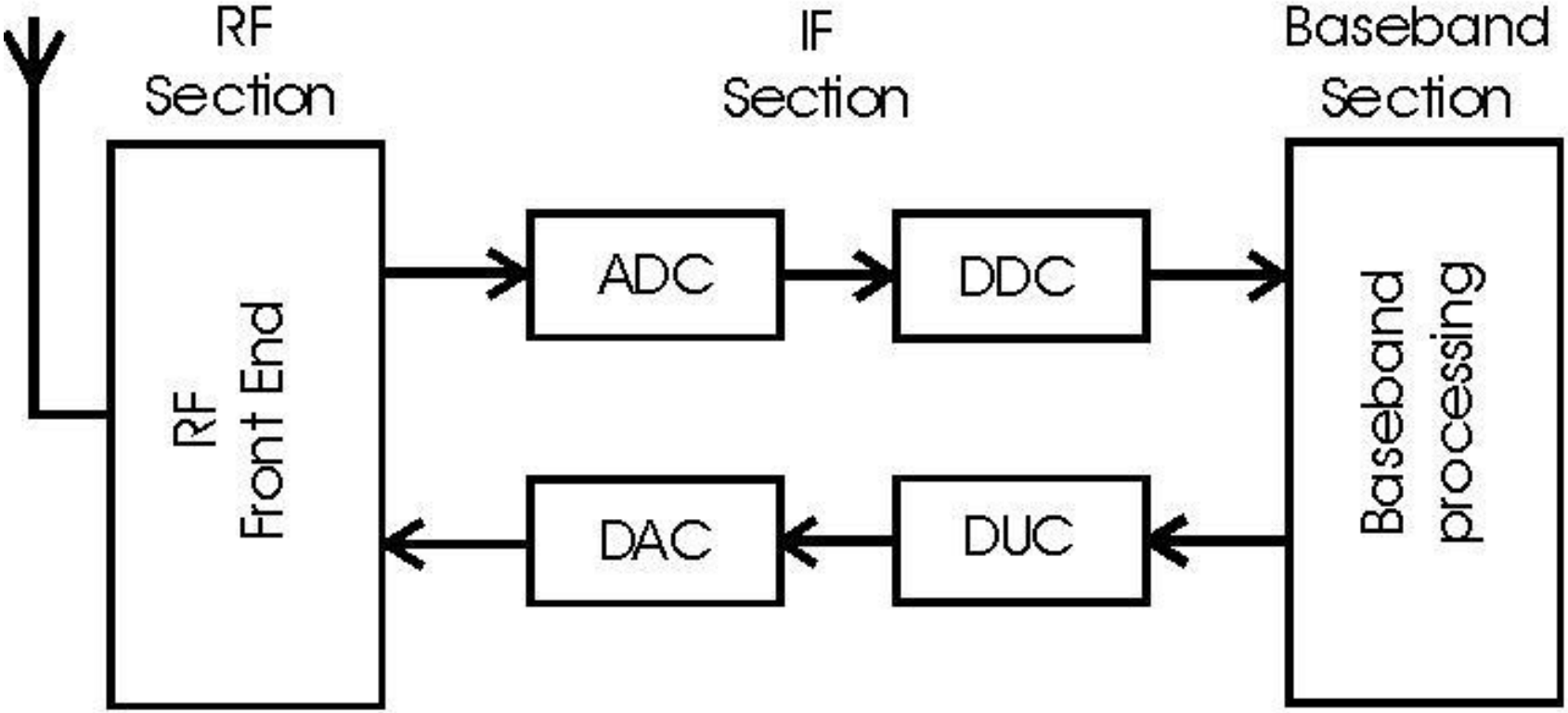

USRP

- We have used the USRP N210 kit. It performs the task of: transmission, receiving and sensing
- The kit is equipped with WBX daughter board which spans a spectrum range of: 50-2200MHz

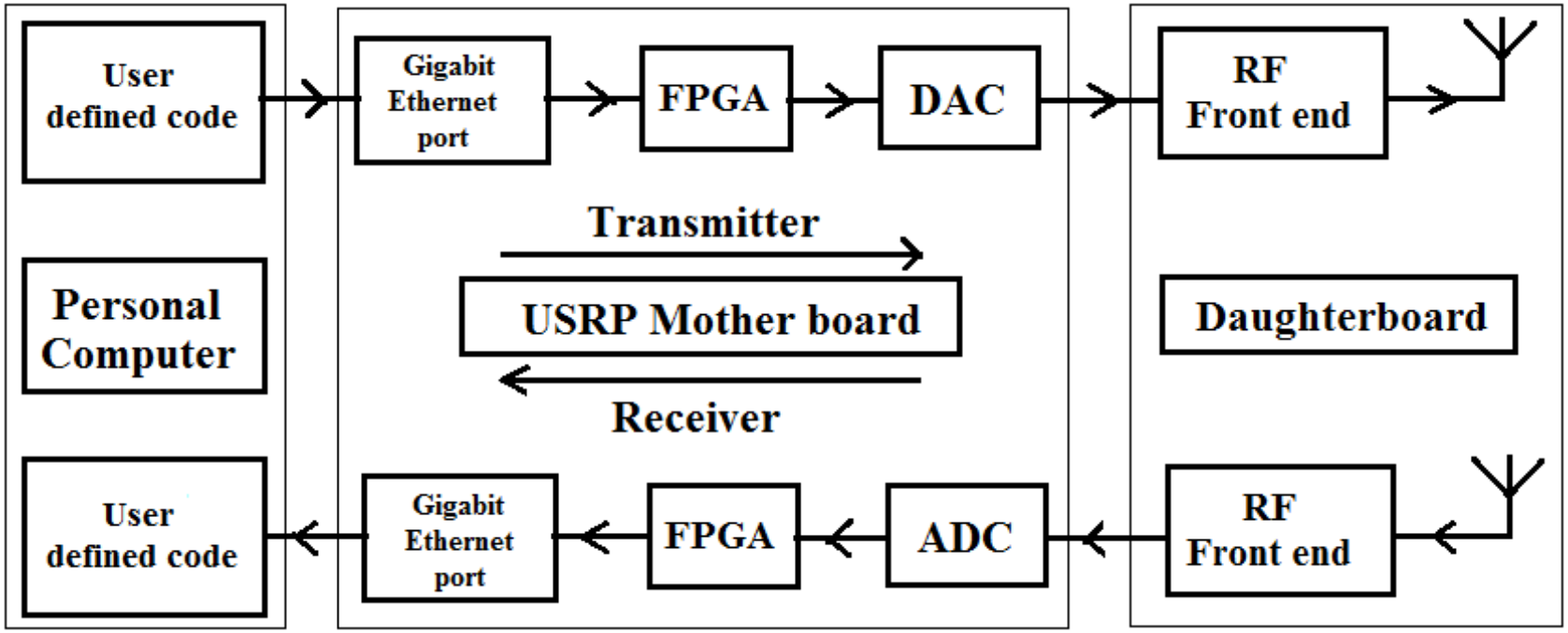

GNURadio

- What is GNU Radio?
- Skeleton code spectrumsense.py
- Block Diagram

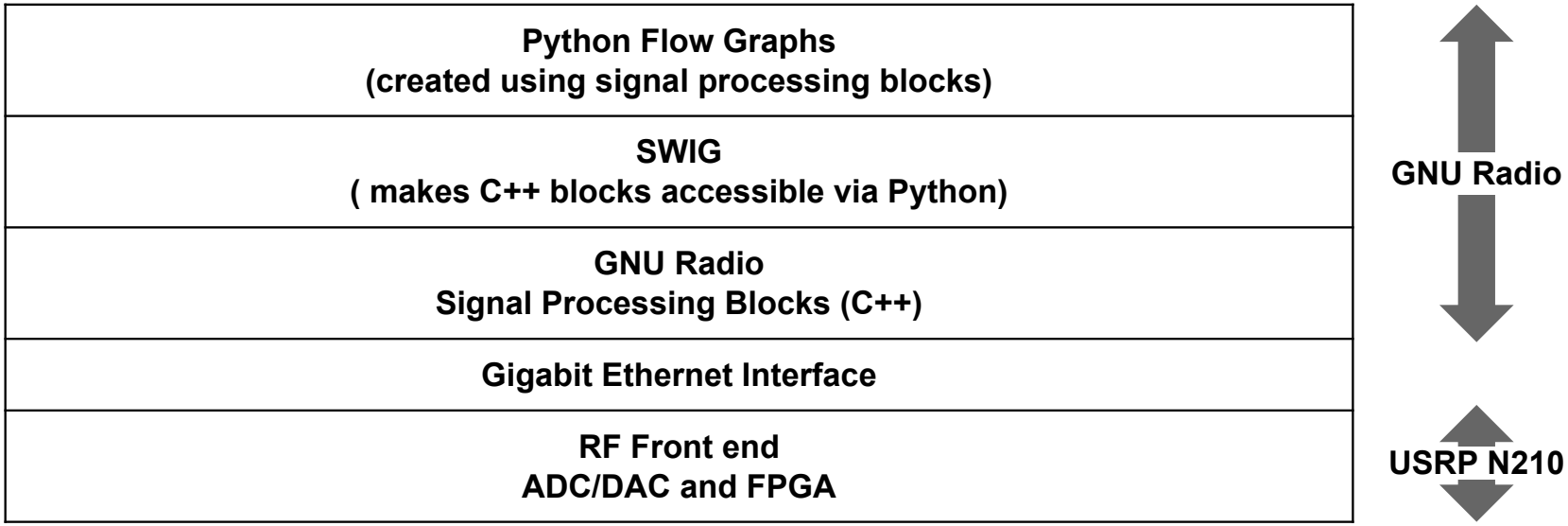

Block diagram of SDR using USRP and GNURadio

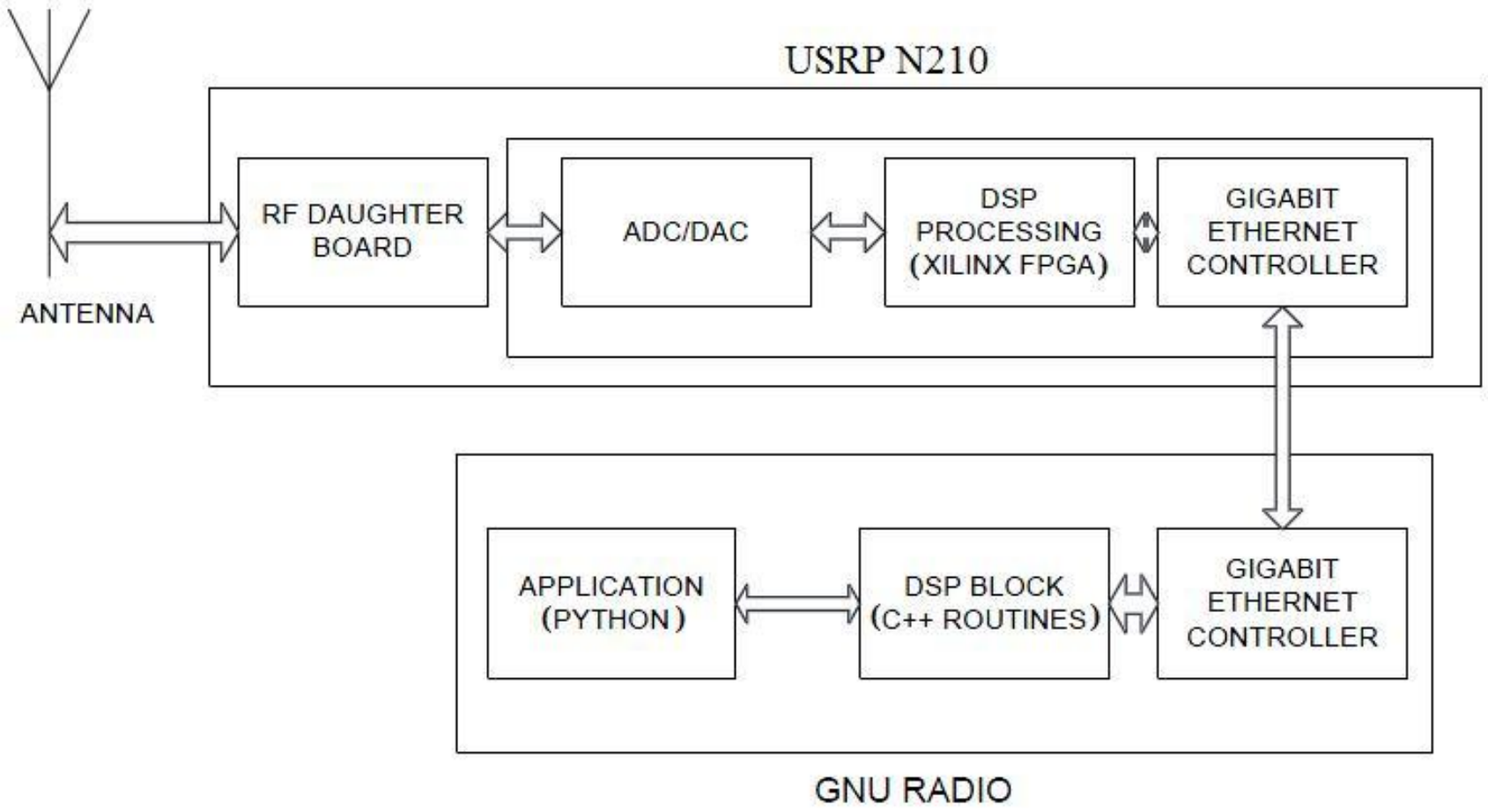

OpenBTS

- Motivation of building OpenBTS
- What is OpenBTS?
- The OpenBTS Application Suite
  - OpenBTS
  - Asterisk
  - Smqueue
  - SIPAuthServe (Subscriber Registry)

Block diagram of SDR using USRP and GNURadio

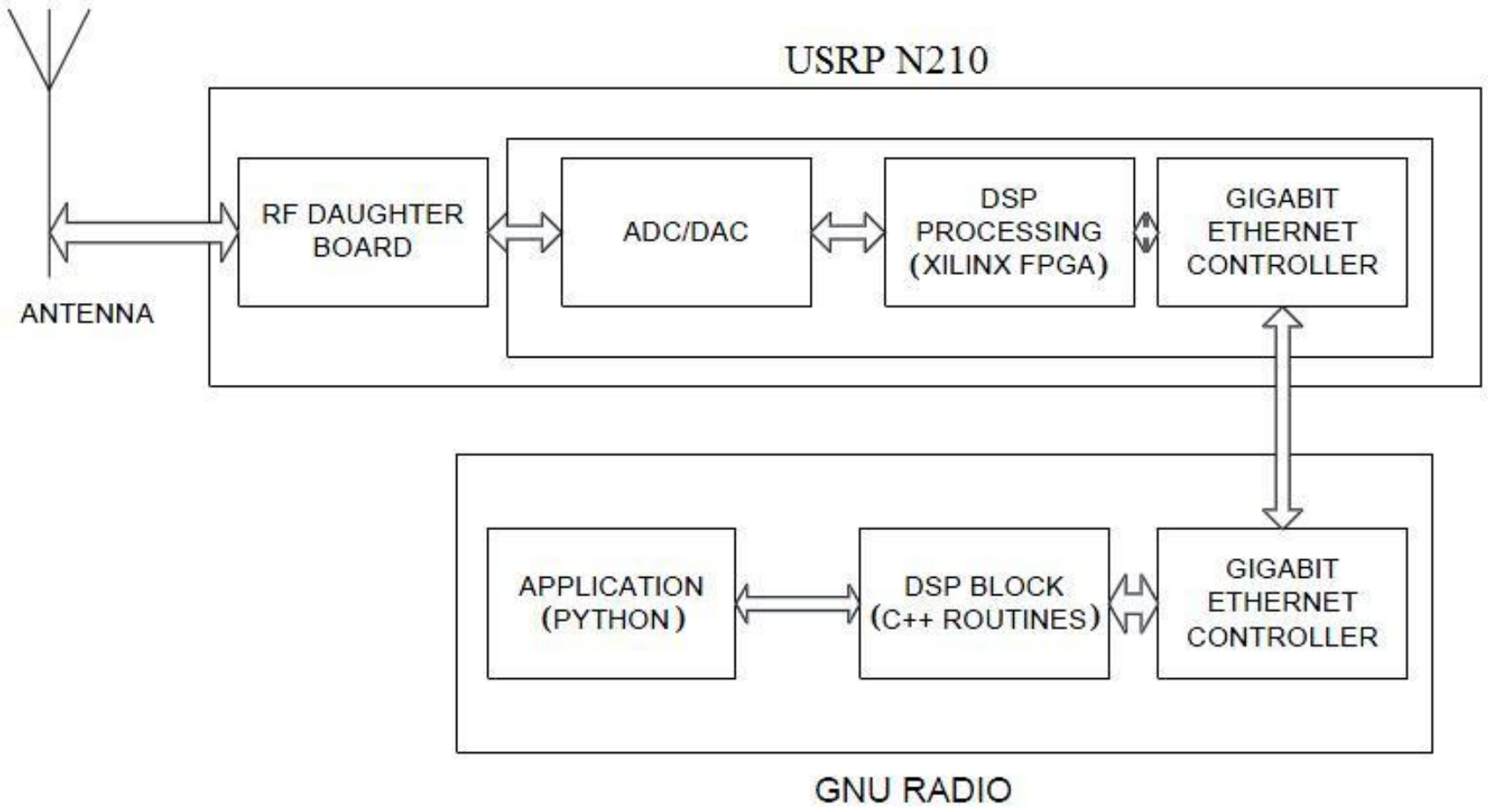

How to register a SIM in the network?

- Sip.conf
- Extensions.conf
- Sqlite3.db

Network organization for OpenBTS

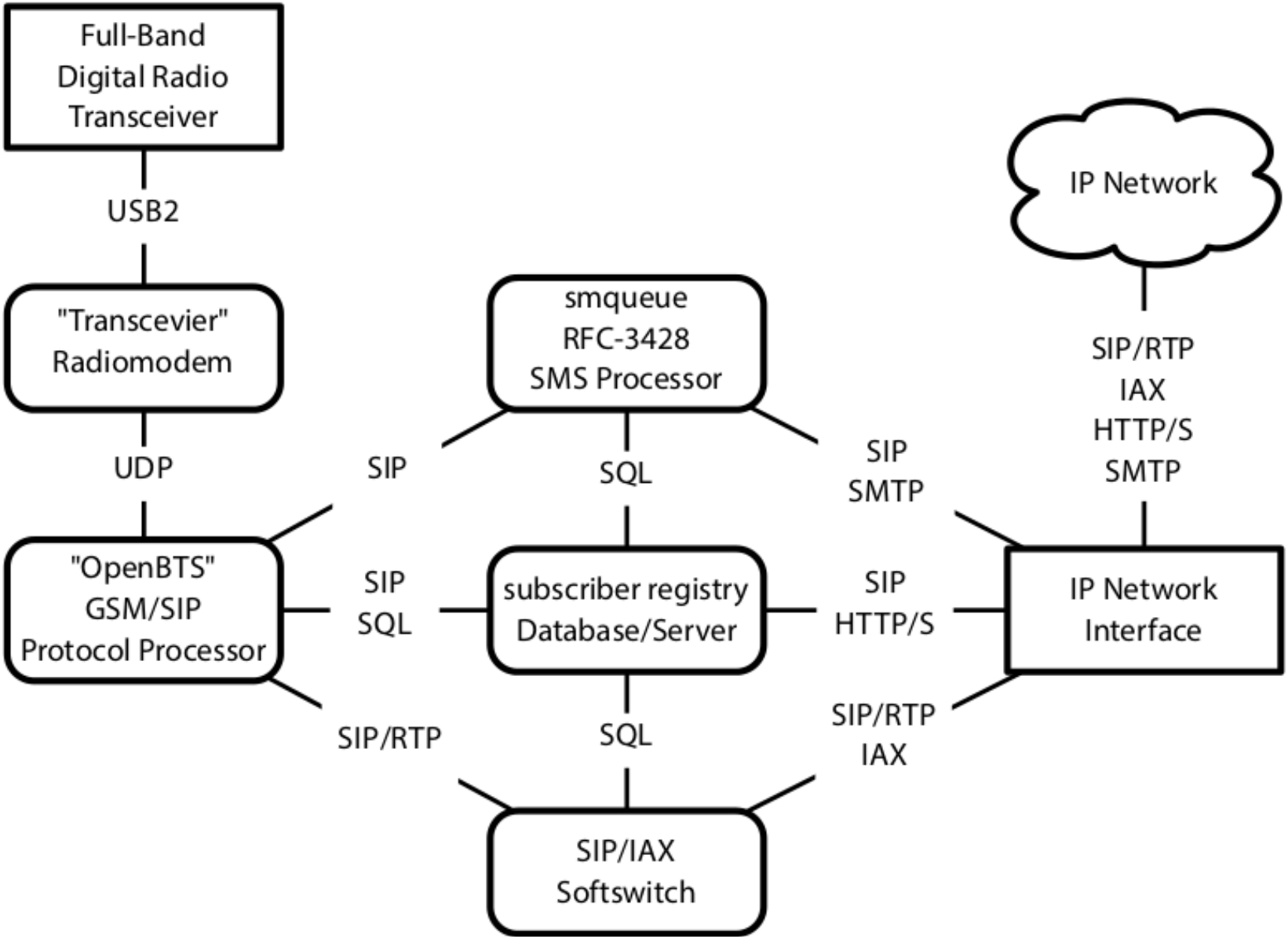

Spectrum sensing

- What is spectrum sensing?
- Various techniques:
  1. Matched filter based technique
  2. Energy detection based technique

Matched filter detection

- Correlation with a filter whose response is matched with reference signal
- Block diagram:

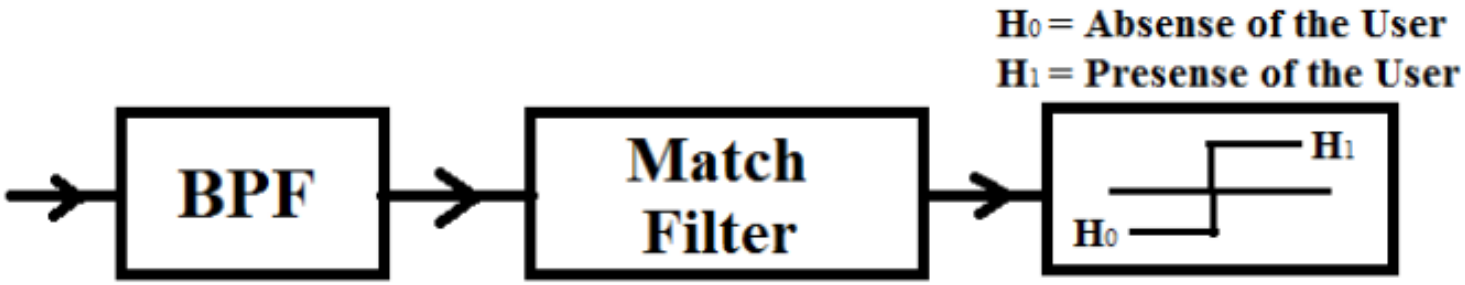

Energy detection technique

- Hypothesis testing
- Equations

$$x(t) = n(t), \qquad H_0$$
$$x(t) = h(t)s(t) + n(t), \qquad H_1$$

- Block diagram

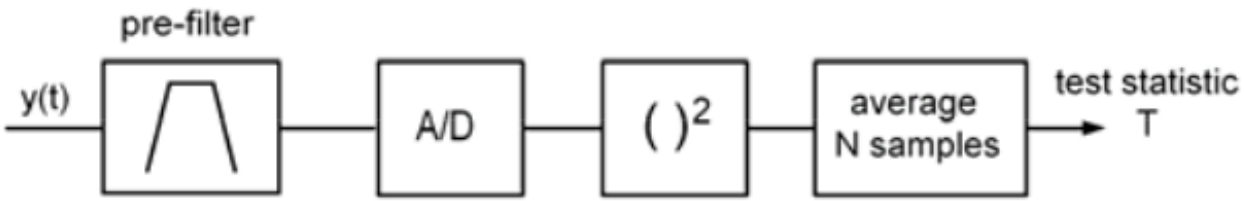

a)

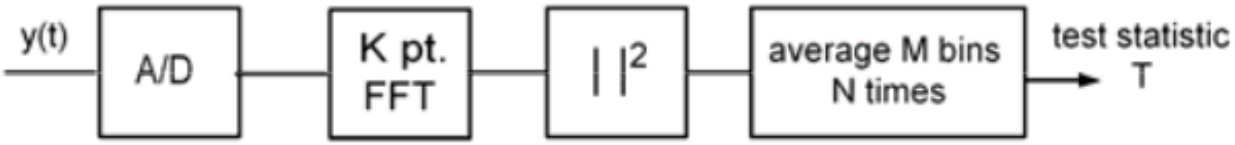

Periodogram Analysis

- $X[n]; n = 0, 1...L-1$ is divided into M finite length segments $X_r[n]; n = 0, 1...N-1$
- The modified periodogram for the rth segment is,

$$I_r[k] = \frac{1}{NU} |V_r[k]|^2 \qquad k = 0, 1...N-1$$

  where $V_r[k] = DFT\{W[n] * X[n]\}$, N point DFT and $U = \frac{1}{N}(\sum_{n-0}^{N-1}(W[n])^2)$ is the normalization factor.
- The PSD of $X[n]$ sequence is then the time averaged periodogram estimate ,

$$I[k] = \frac{1}{M} \left| \sum_{r=0}^{M-1} X_r[k] \right|$$

Two frequency system

- Channels used: 945MHz and 955MHz
- Experimental setup :

Flow chart for two frequency system

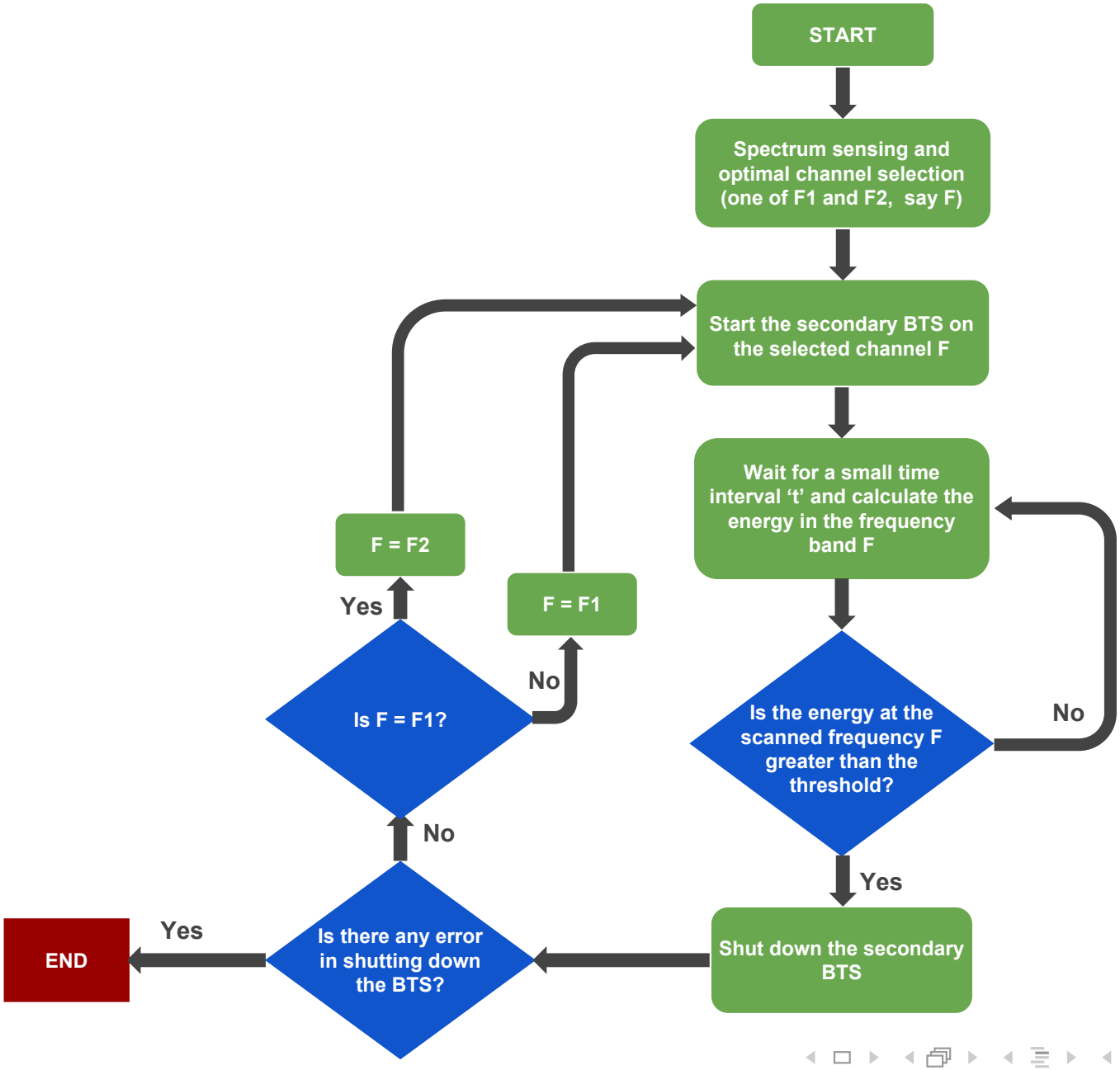

VIDEO for two frequency system

Four frequency system

- Channels used: 936MHz, 943MHz , 950MHz , 957MHz
- Experimental setup :

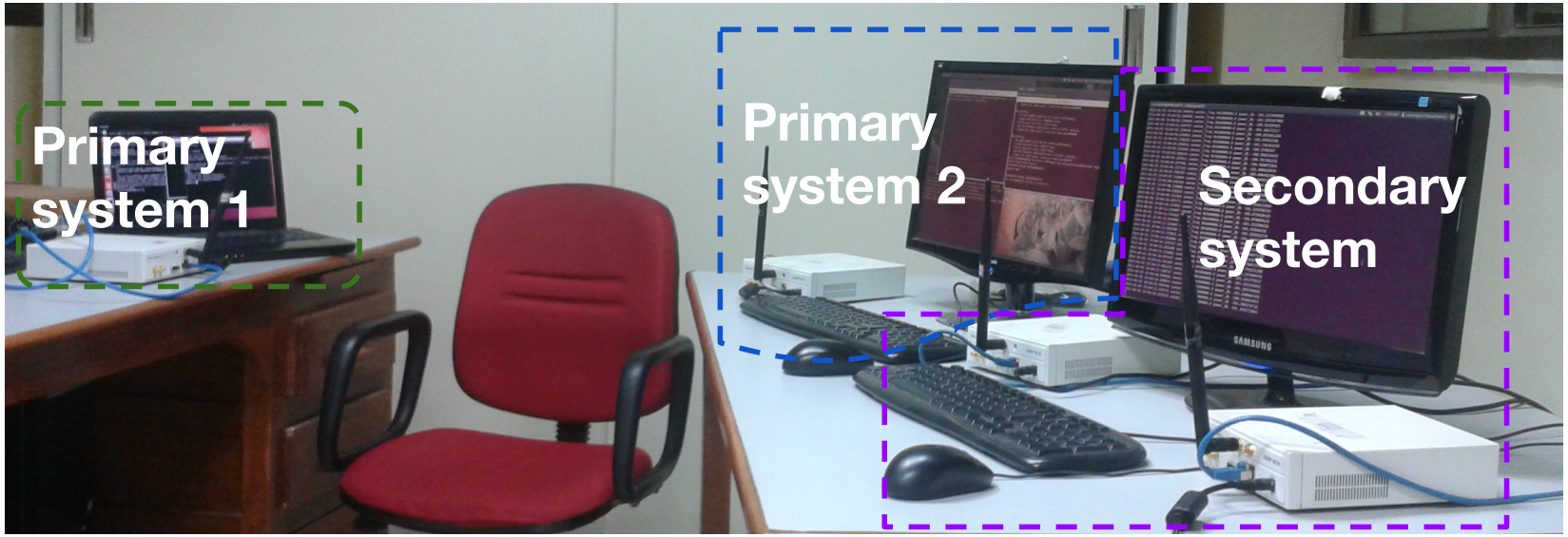

Flow chart for four frequency system

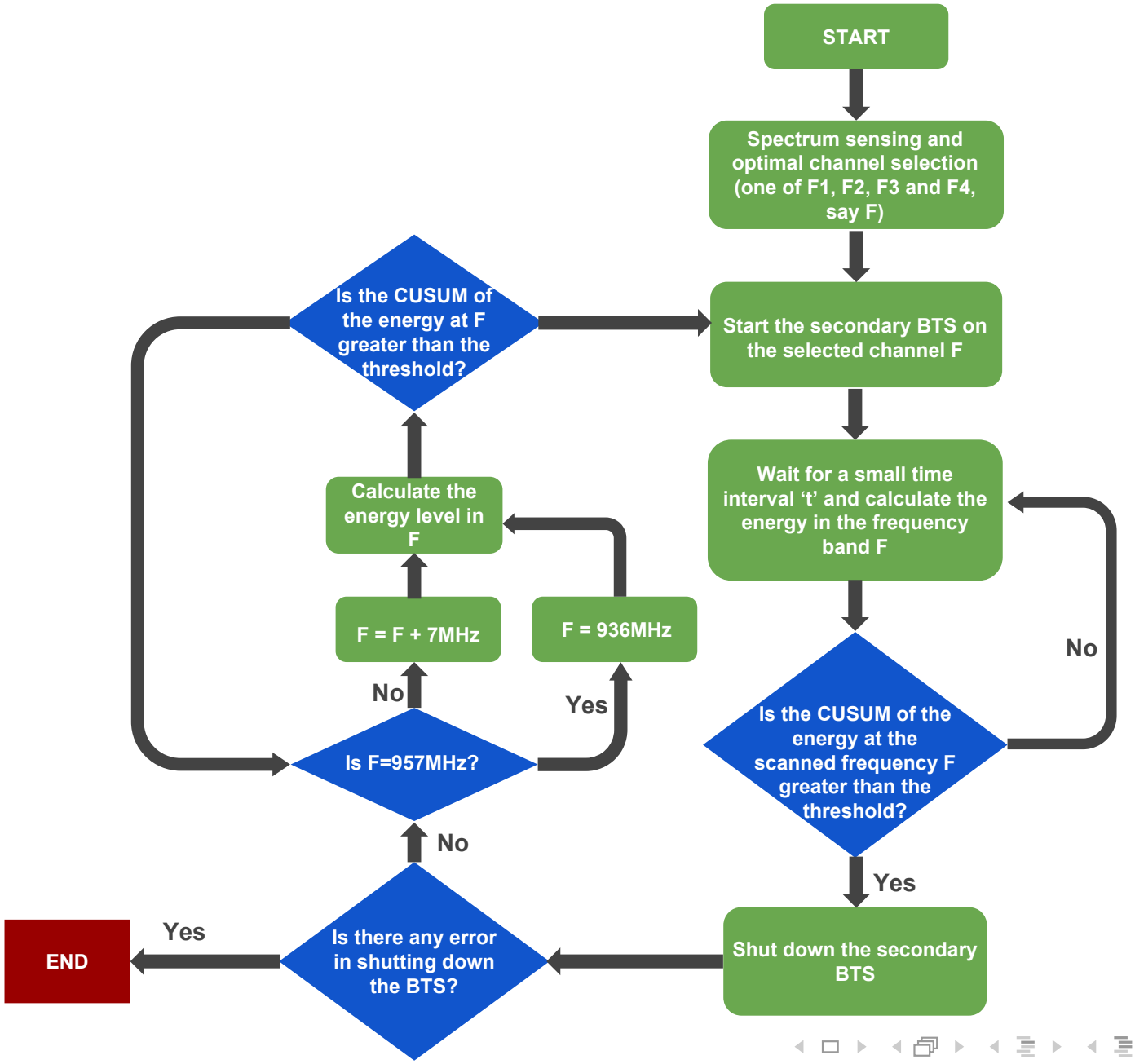

VIDEO for four frequency system