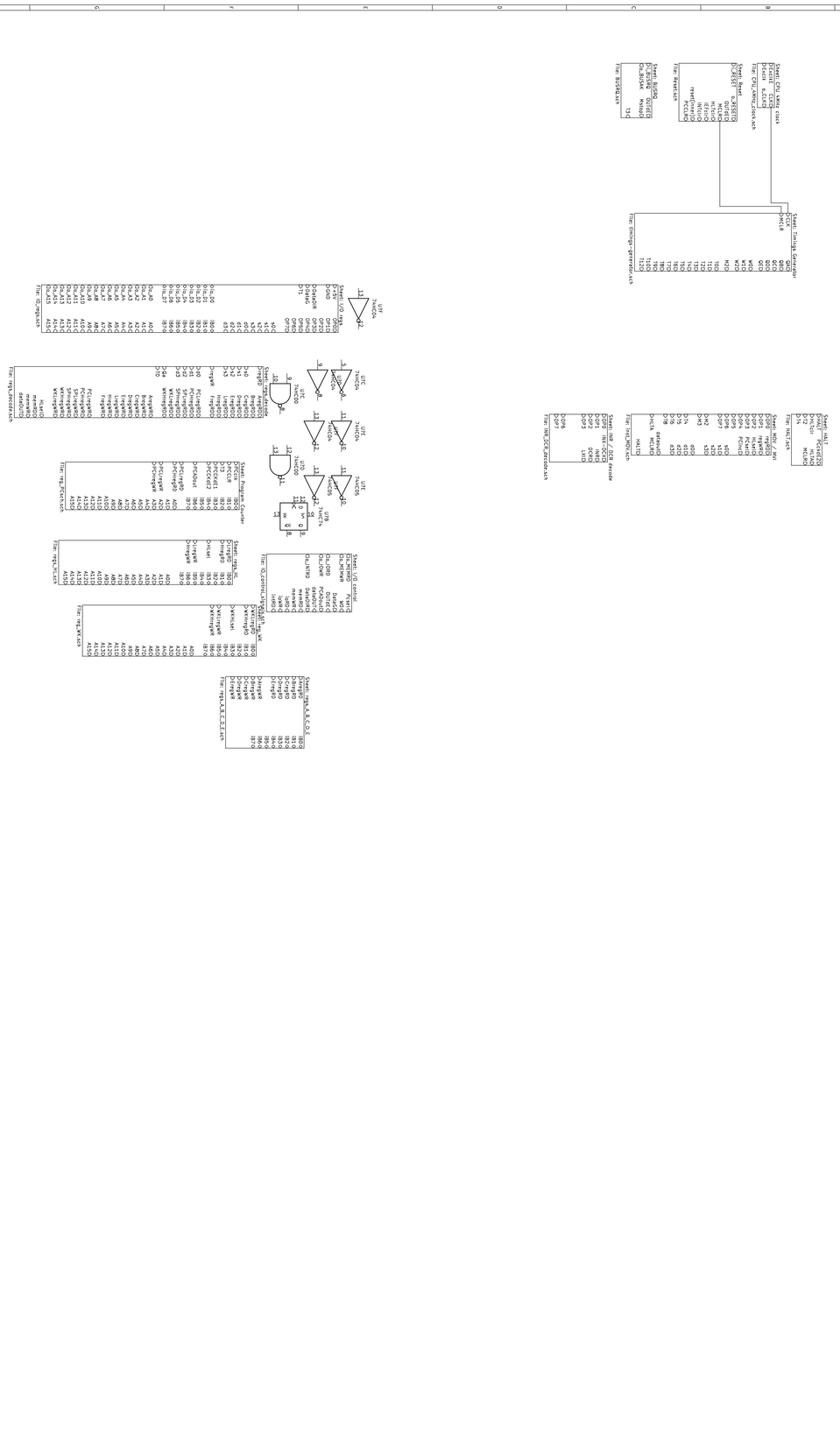

Sheet: /
File: 8080-MC.sch

Title

Size: A3	Date:
Kicad 5.1.5 release-5.1.5-unknown-fdf6a9a~70~ubuntu18.04.1	Rev: 0.1
	Id: 1/15

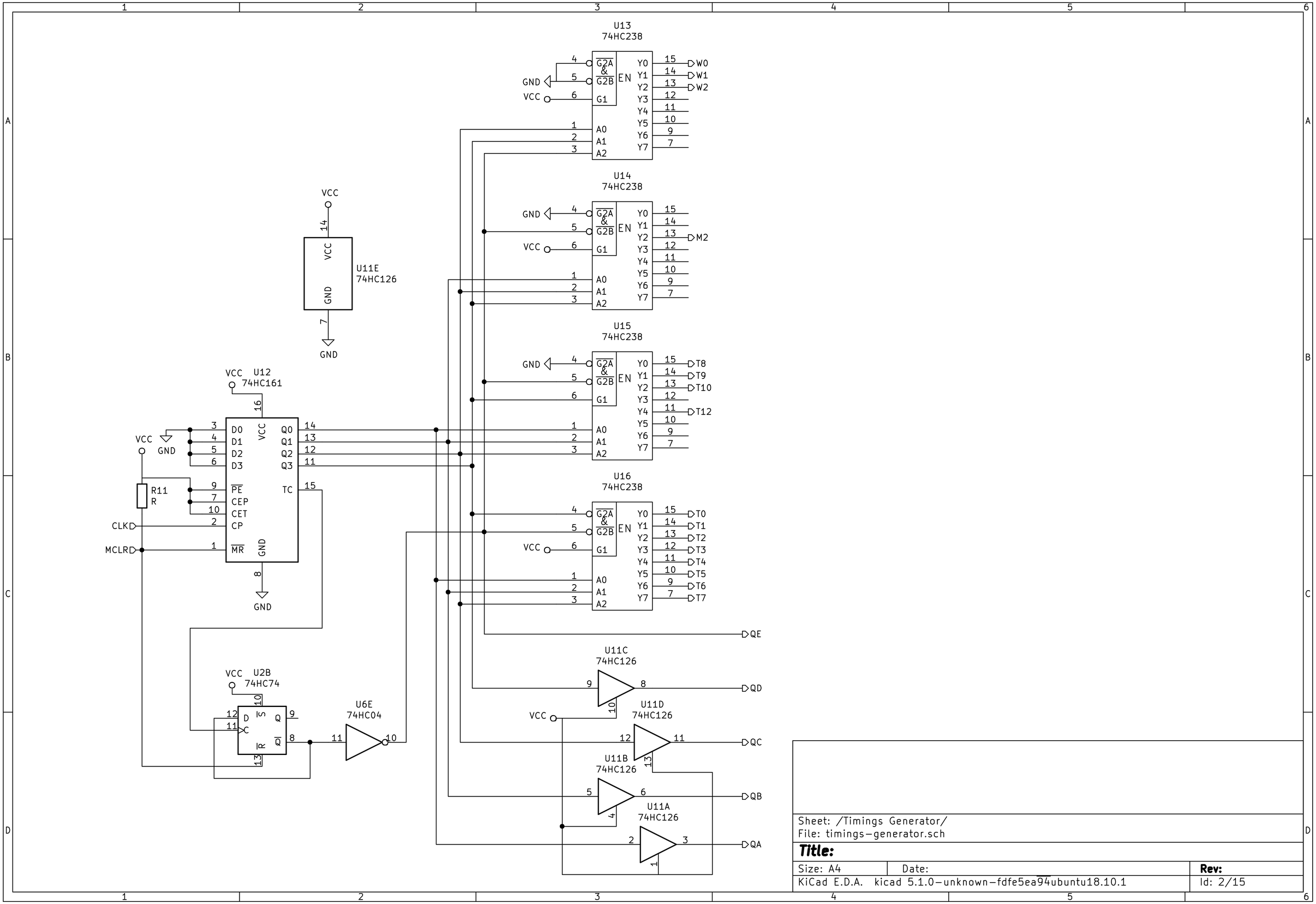

Sheet: /Timings Generator/
File: timings-generator.sch

Title:

Size: A4	Date:	Rev:
KiCad E.D.A. kicad 5.1.0-unknown-fdfe5ea94ubuntu18.10.1		Id: 2/15

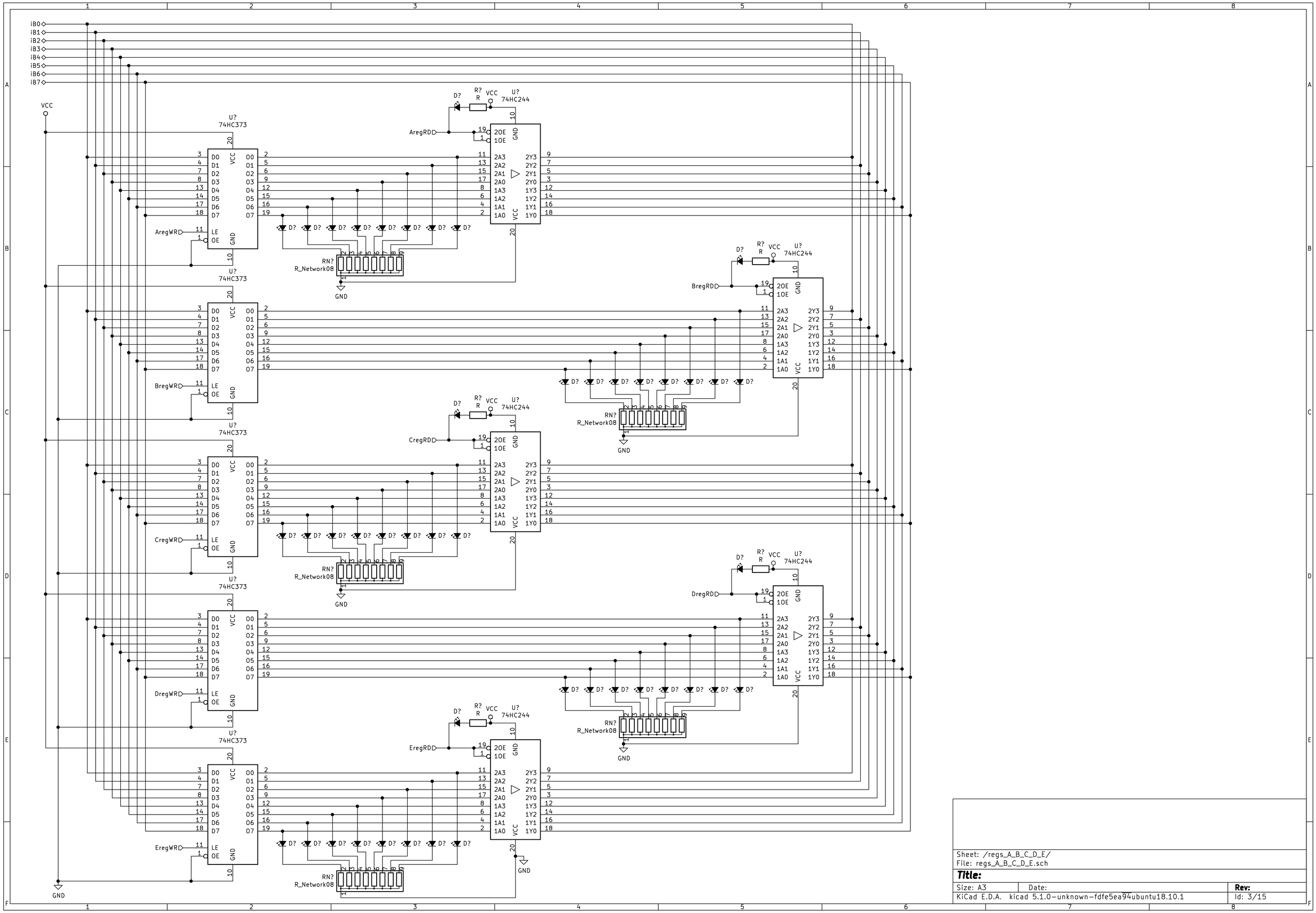

Sheet: /regs_A_B_C_D_E/
File: regs_A_B_C_D_E.sch

Title:

Size: A3	Date:	Rev:
KiCad E.D.A. kicad 5.1.0-unknown-fdfe5ea94ubuntu18.10.1		Id: 3/15

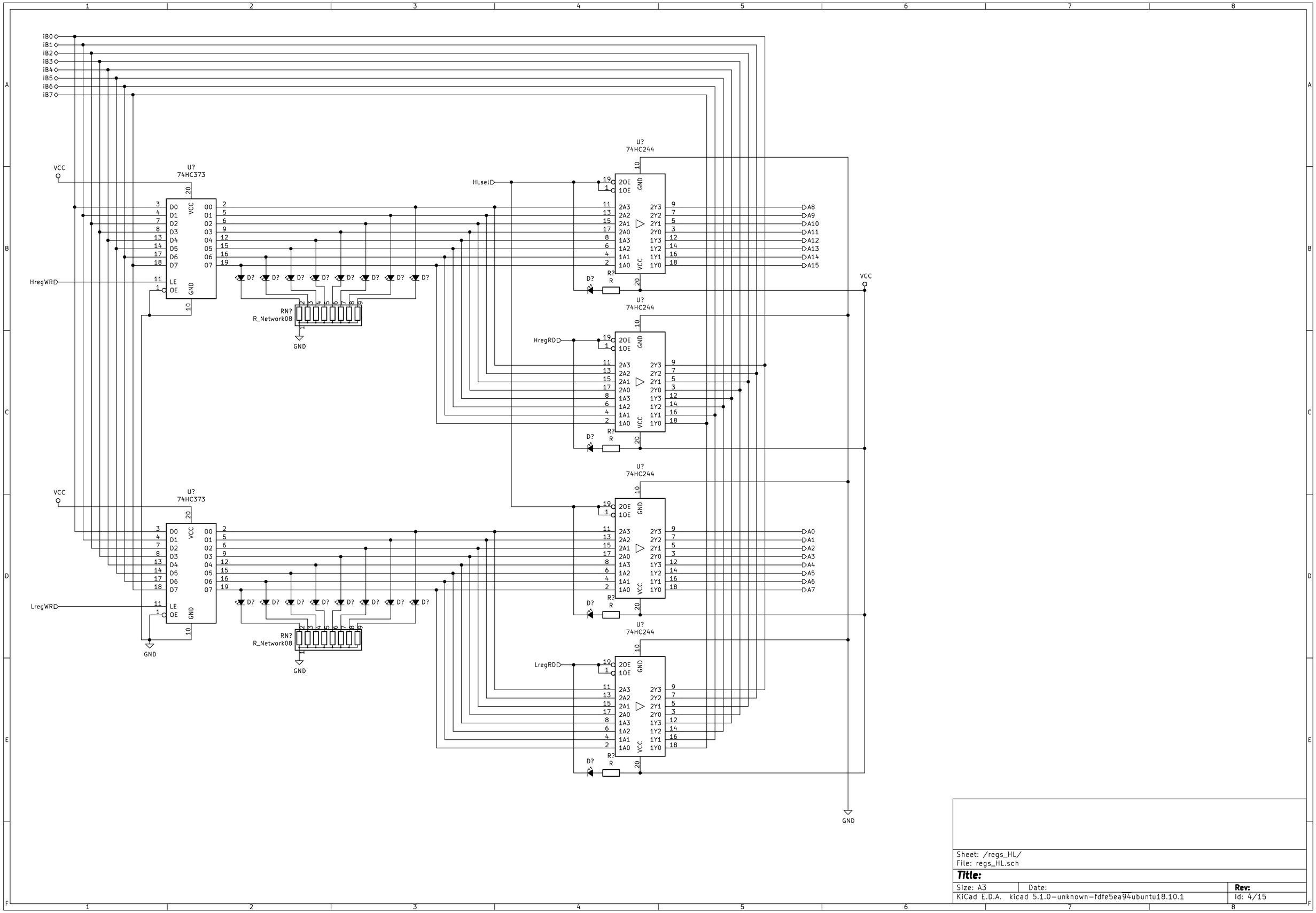

Sheet: /regs_HL/
File: regs_HL.sch

Title:

Size: A3	Date:	Rev:
KiCad E.D.A. kicad 5.1.0-unknown-fdfe5ea94ubuntu18.10.1		Id: 4/15

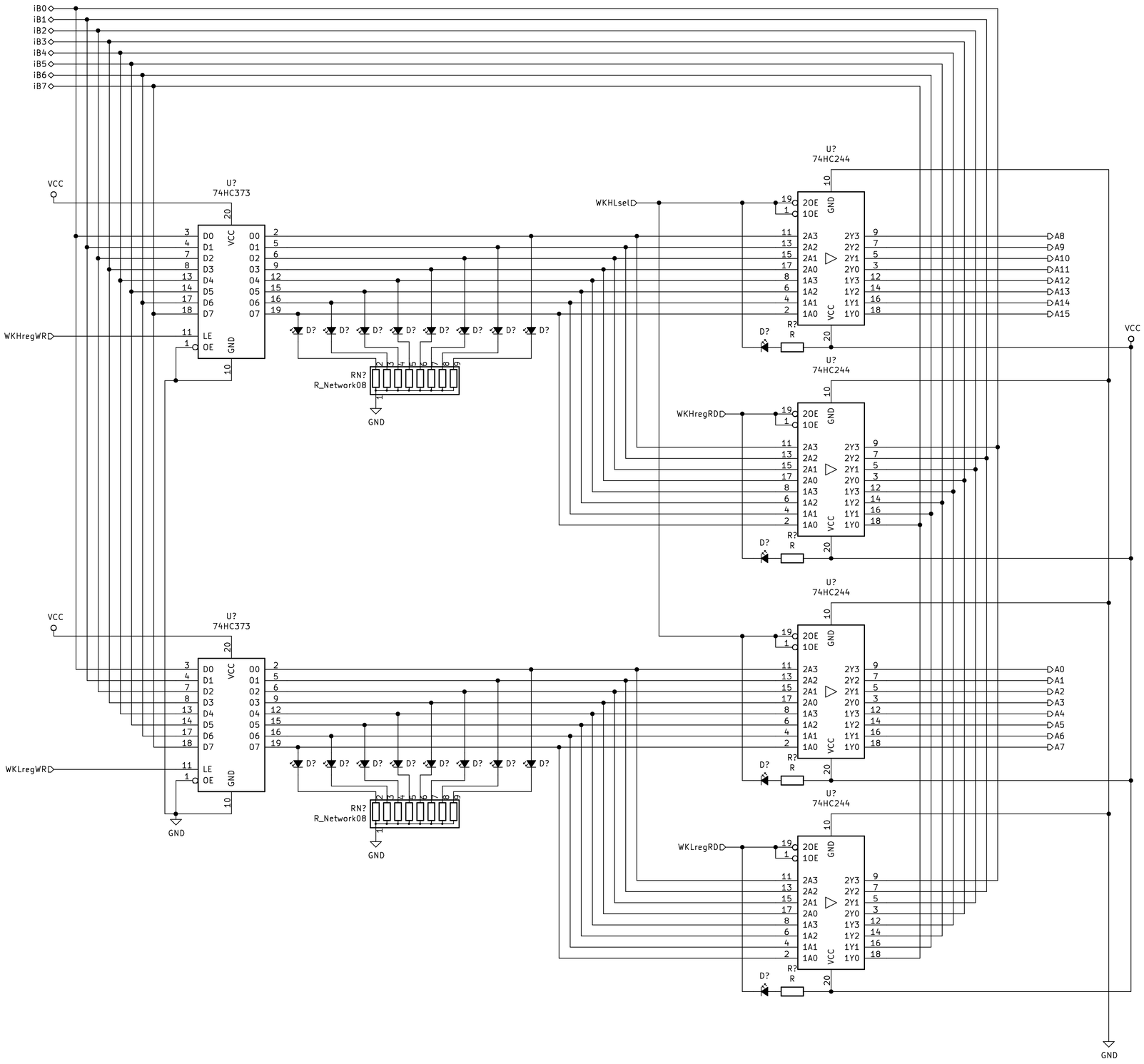

Sheet: /reg_WK/
File: reg_WK.sch

Title:

Size: A3	Date:	Rev:
KiCad E.D.A. kicad 5.1.0-unknown-fdfe5ea94ubuntu18.10.1		Id: 5/15

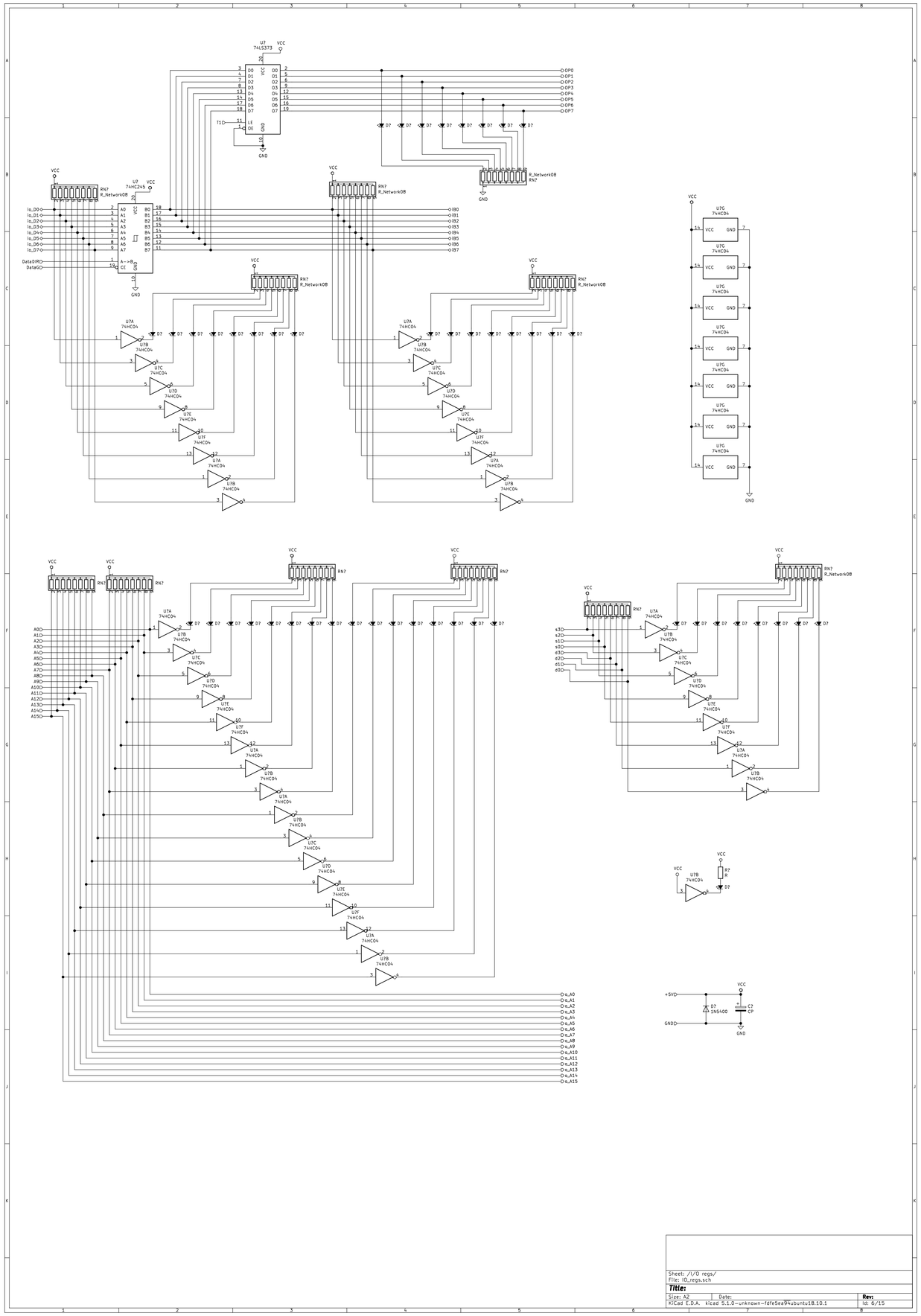

Sheet: /I/O regs/
File: IO_regs.sch

Title:

Size: A2	Date:	Rev:
KiCad E.D.A. kicad 5.1.0-unknown-fdfe5ea94ubuntu18.10.1		Id: 6/15

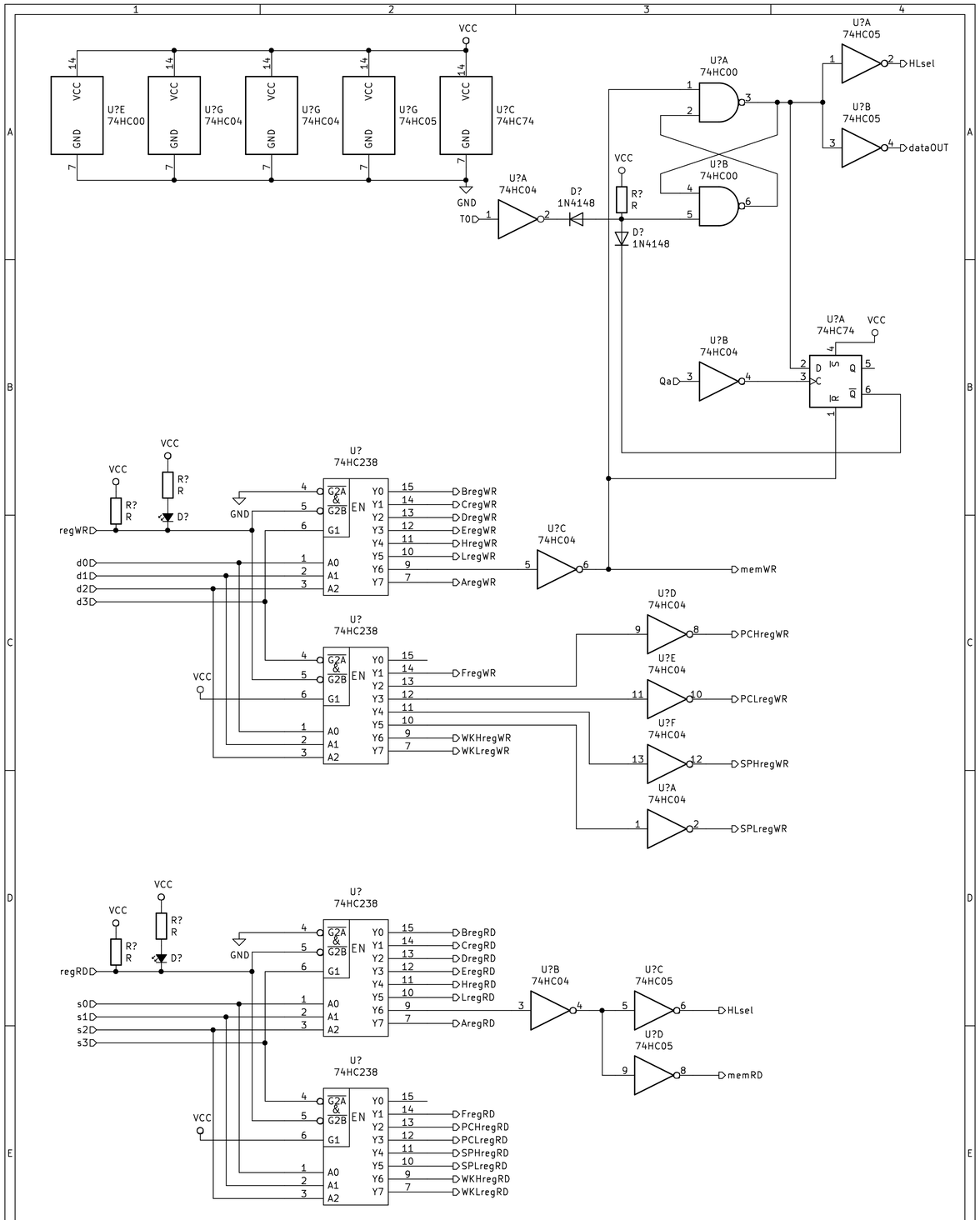

Sheet: /regs_decode/
File: regs_decode.sch

Title:

Size: A4	Date:	**Rev:**
KiCad E.D.A. kicad 5.1.0-unknown-fdfe5ea94ubuntu18.10.1		Id: 7/15

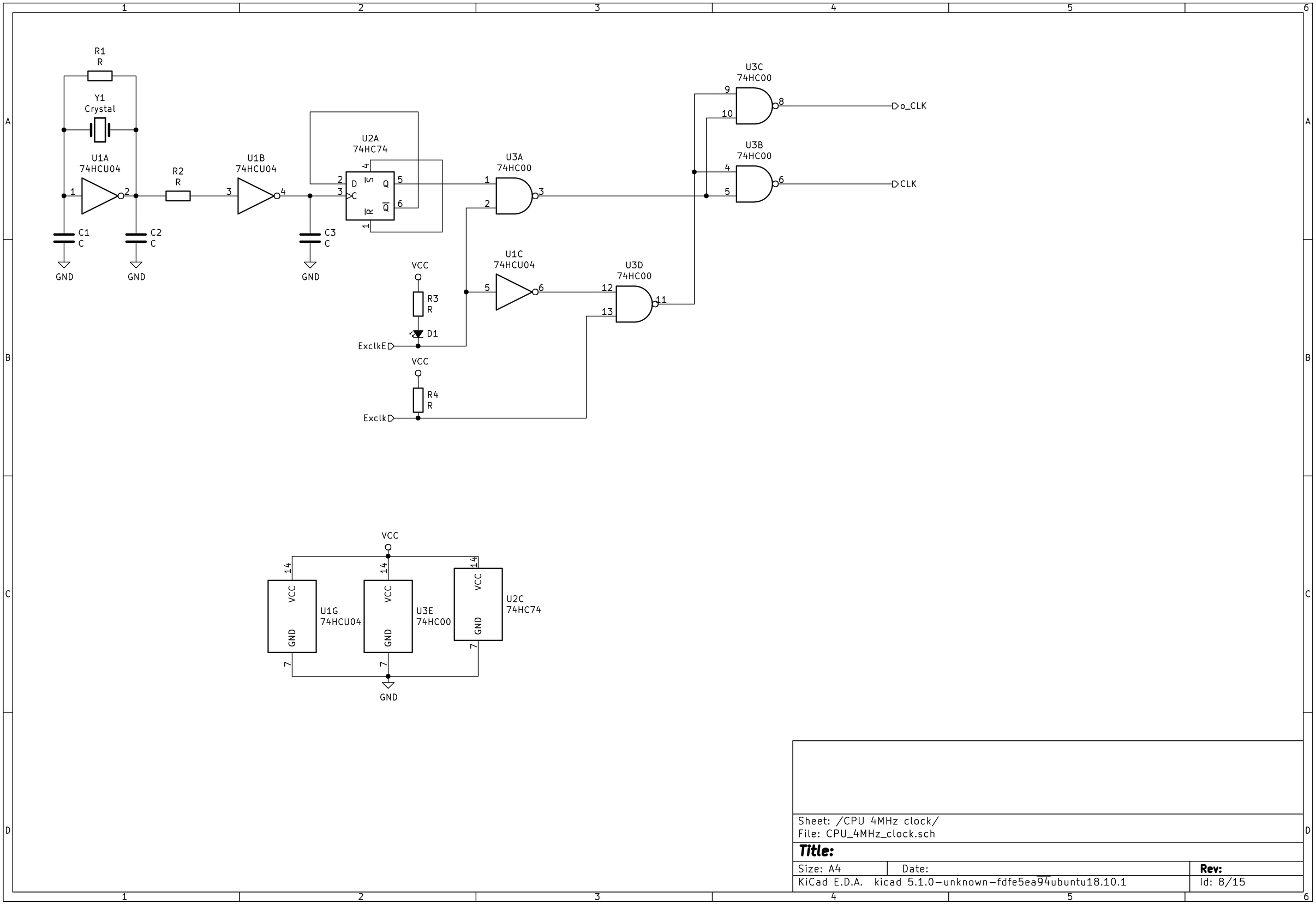

Sheet: /CPU 4MHz clock/
File: CPU_4MHz_clock.sch

Title:

Size: A4	Date:	**Rev:**
KiCad E.D.A. kicad 5.1.0-unknown-fdfe5ea94ubuntu18.10.1		Id: 8/15

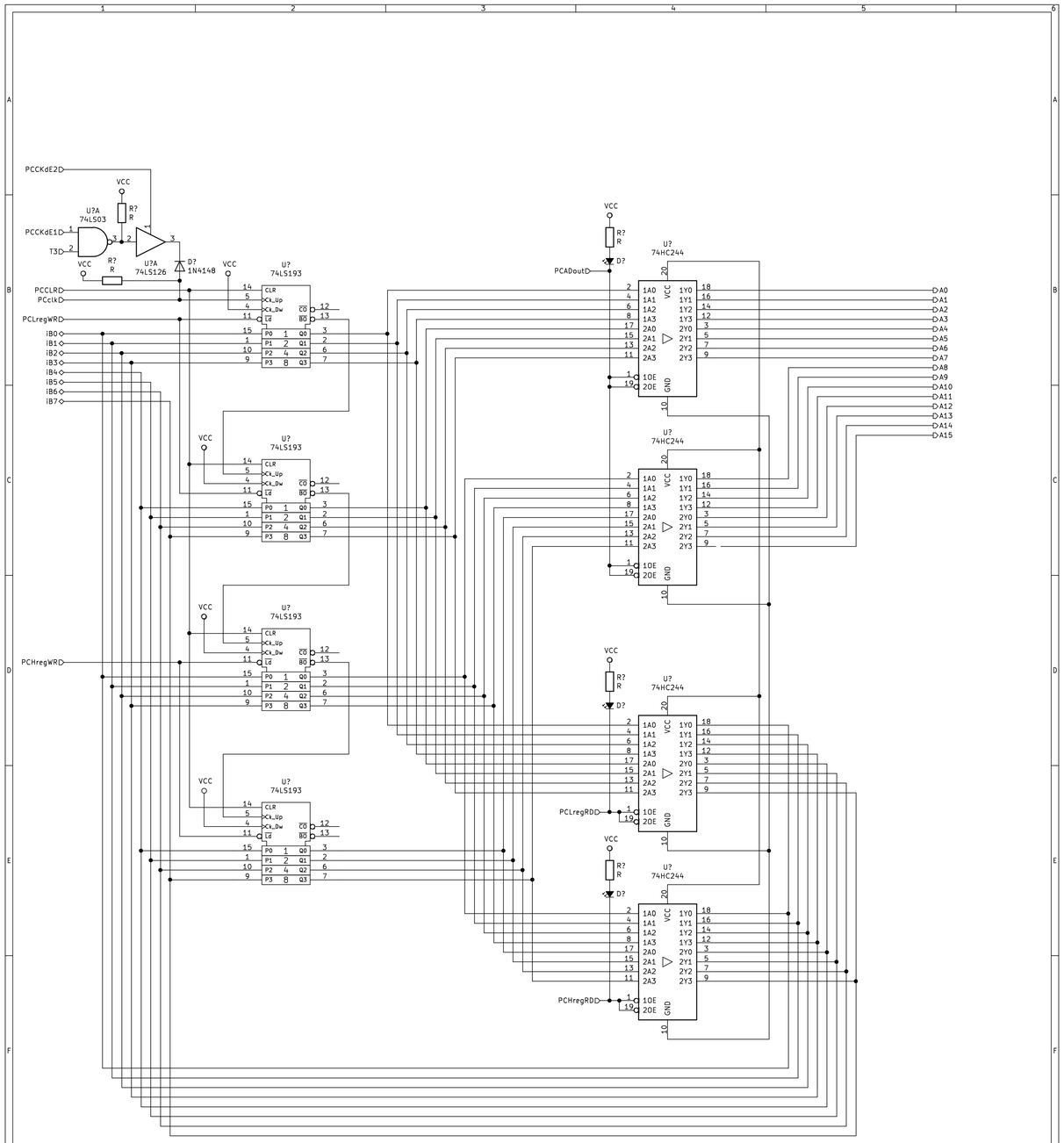

Sheet: /Program Counter/
File: reg_PCsch.sch

Title:

Size: A3	Date:	Rev:
KiCad E.D.A. kicad 5.1.0-unknown-fdfe5ea94ubuntu18.10.1		Id: 9/15

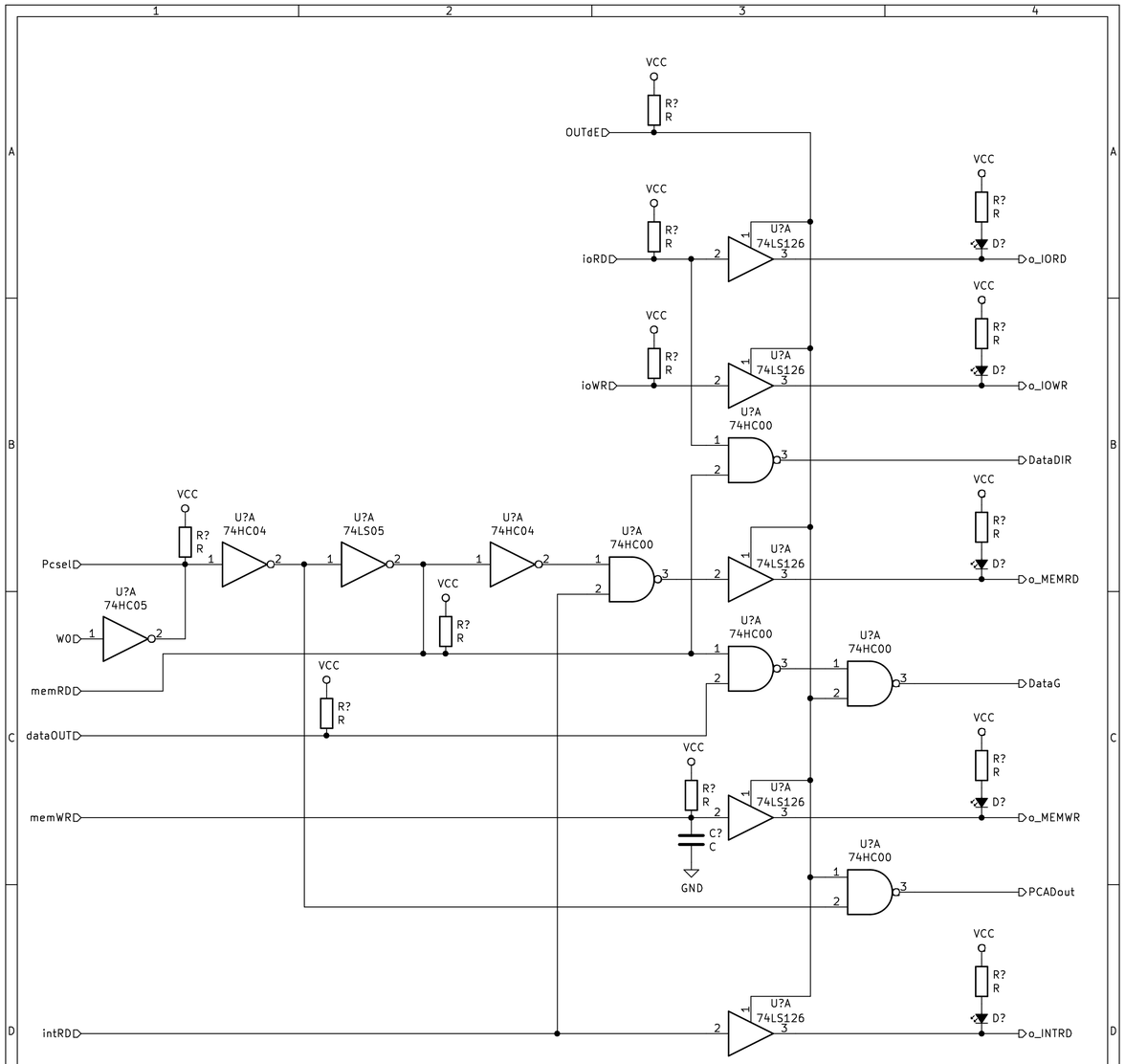

Sheet: /I/O control/
File: IO_control_signals.sch

Title:

Size: A4	Date:	Rev:
KiCad E.D.A. kicad 5.1.0-unknown-fdfe5ea94ubuntu18.10.1		Id: 10/15

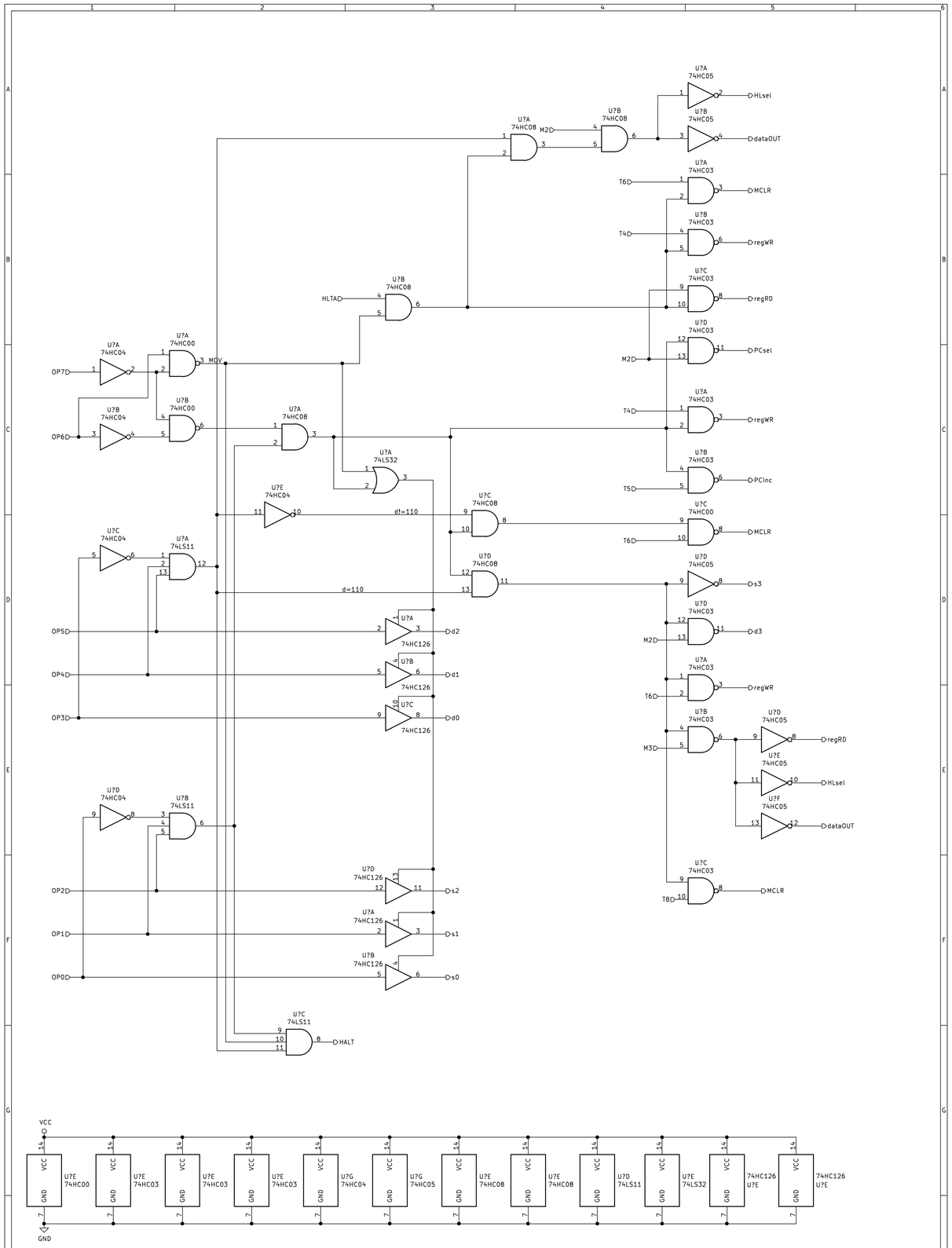

Sheet: /MOV / MVI/
File: inst_MOV.sch

Title:

Size: A3	Date:	Rev:
KiCad E.D.A. kicad 5.1.0-unknown-fdfe5ea94ubuntu18.10.1		Id: 11/15

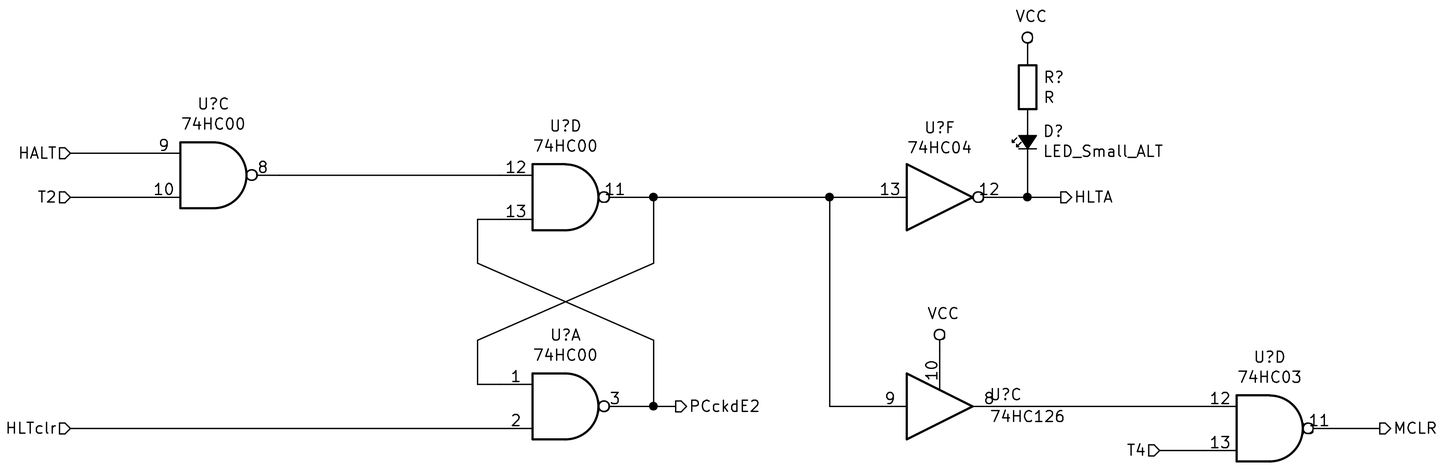

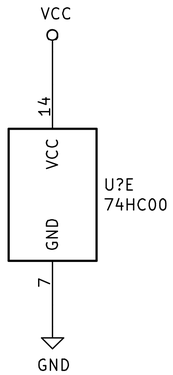

Sheet: /HALT/
File: HALT.sch

Title:

Size: A4	Date:	Rev:
KiCad E.D.A. kicad 5.1.0-unknown-fdfe5ea94ubuntu18.10.1		Id: 12/15

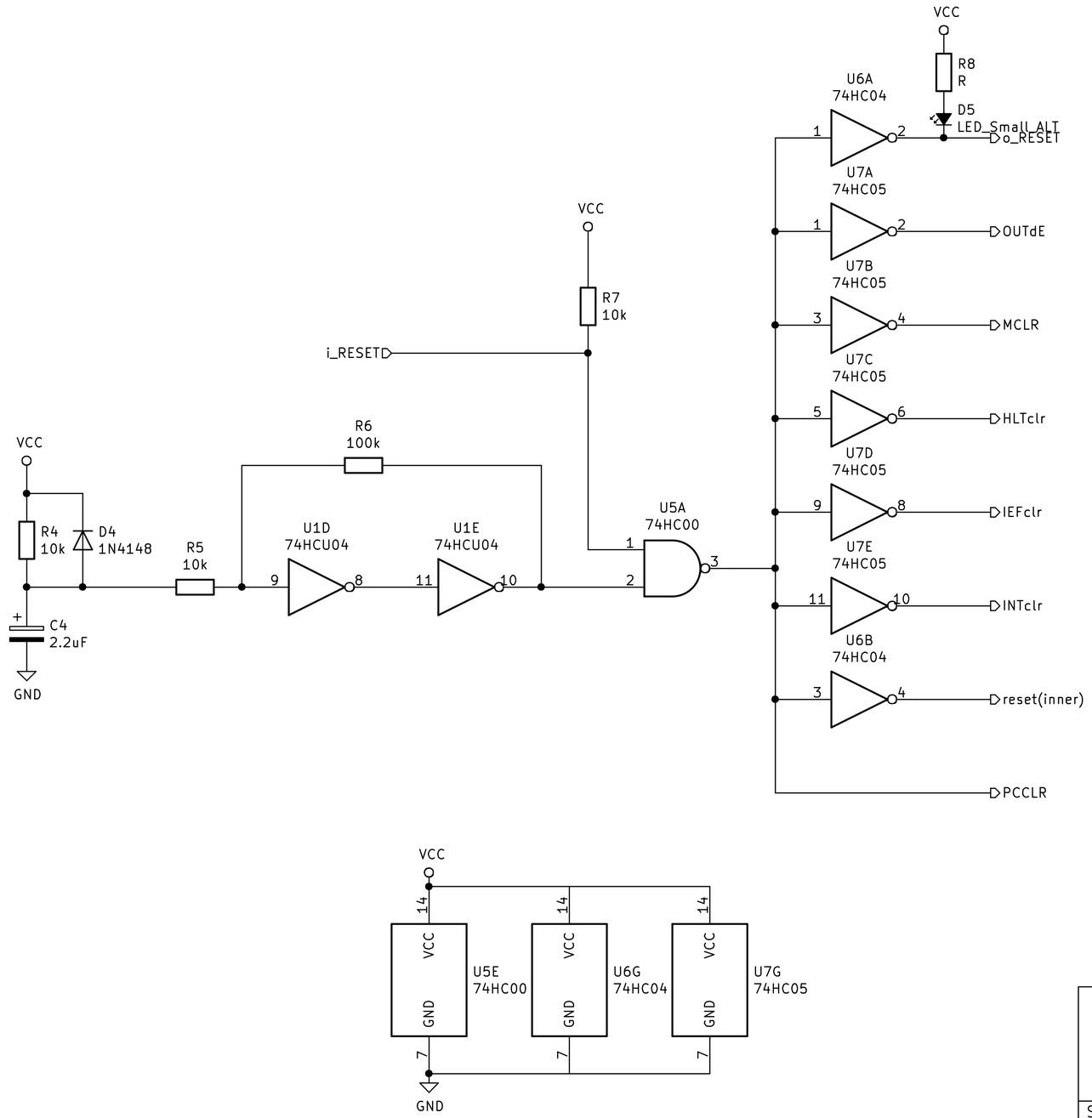

Sheet: /Reset/
File: Reset.sch

Title:

Size: A4	Date:	Rev:
KiCad E.D.A. kicad 5.1.0-unknown-fdfe5ea94ubuntu18.10.1		Id: 13/15

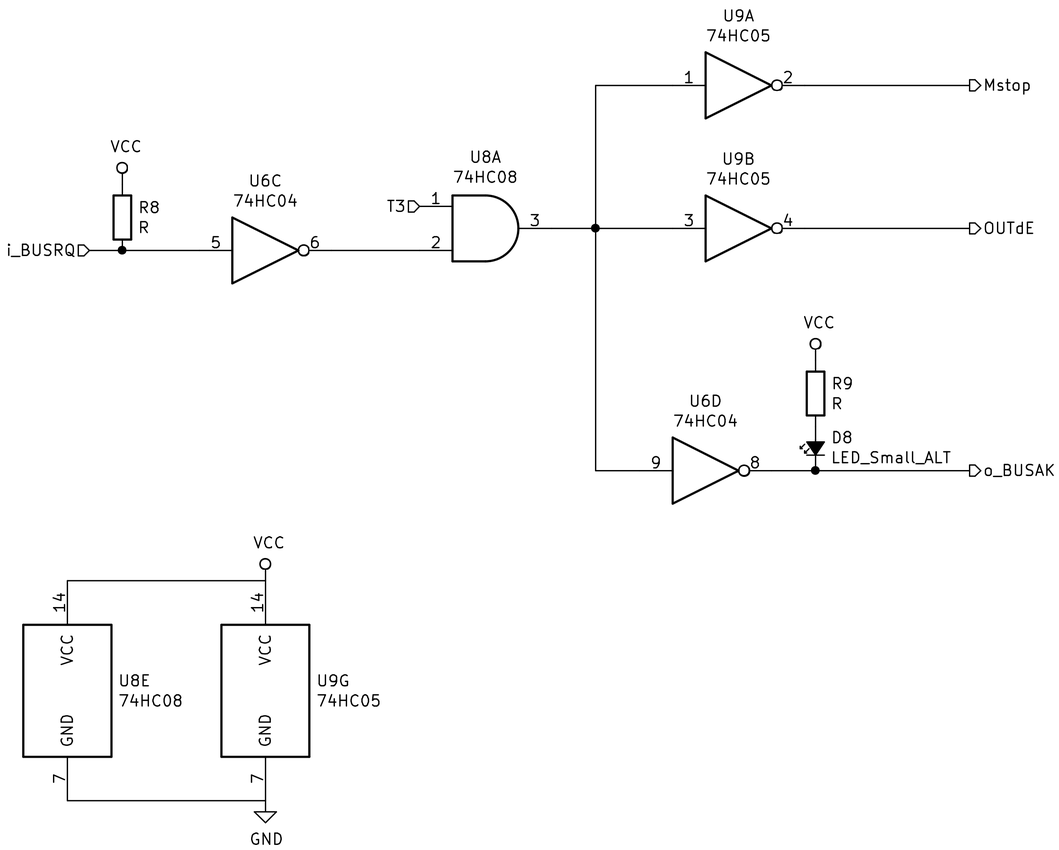

Sheet: /BUSRQ/
File: BUSRQ.sch

Title:

Size: A4	Date:	Rev:
KiCad E.D.A. kicad 5.1.0-unknown-fdfe5ea94ubuntu18.10.1		Id: 14/15

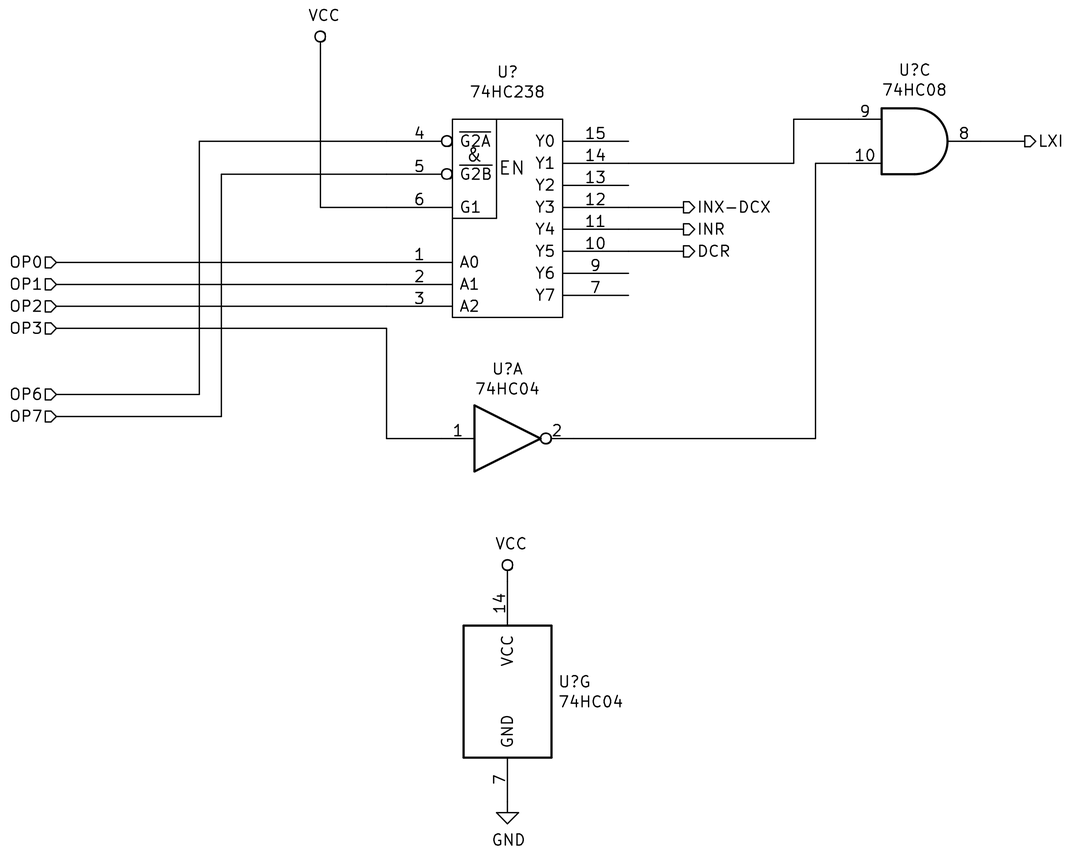

Sheet: /INR / DCR decode/
File: INR_DCR_decode.sch

Title:

Size: A4	Date:	**Rev:**
KiCad E.D.A. kicad 5.1.0-unknown-fdfe5ea94ubuntu18.10.1		Id: 15/15