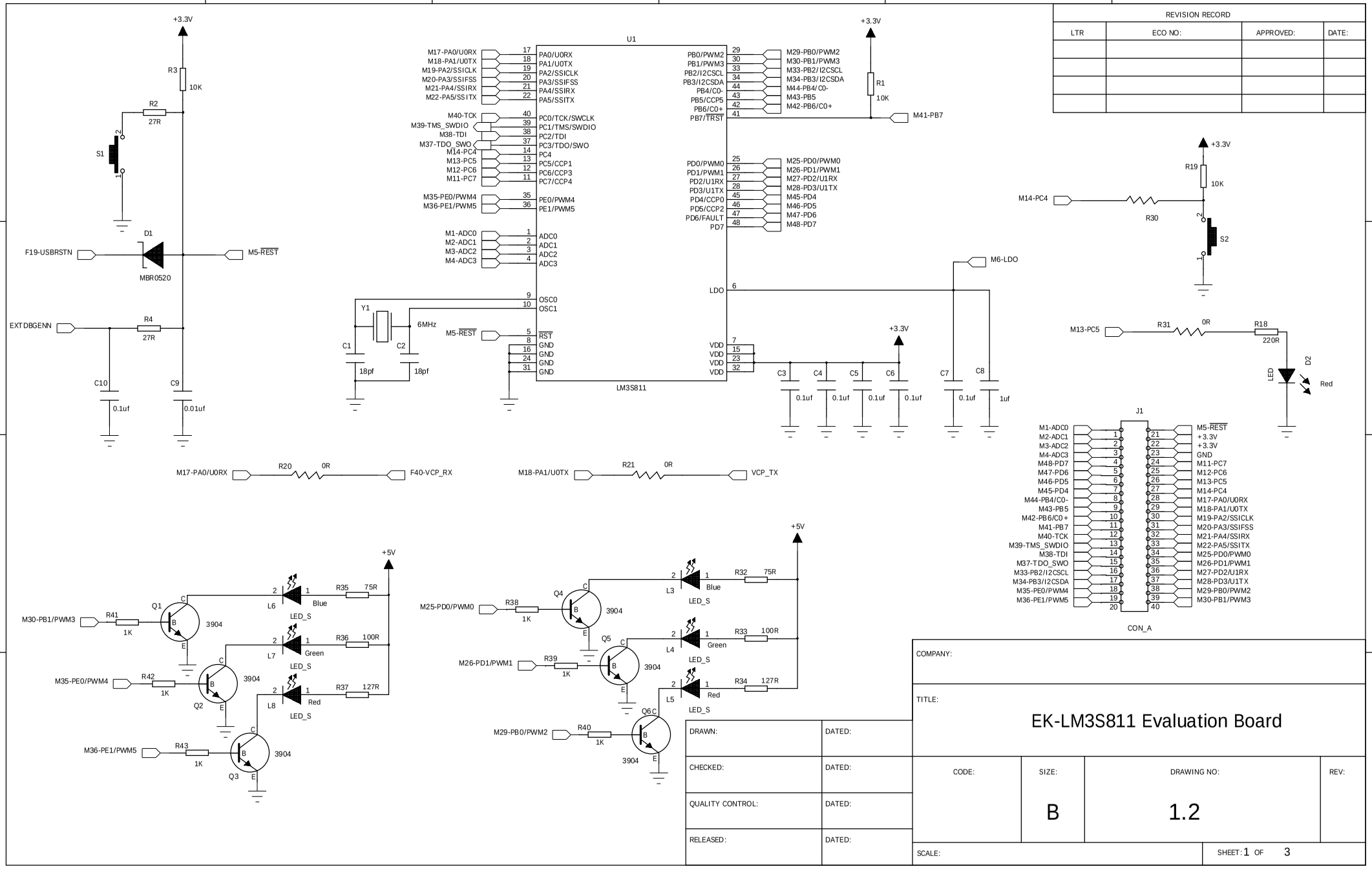
REVISION RECORD
LTR
ECO NO:
APPROVED:
DATE:
U1
LM3S811
PA0/U0RX
PA1/U0TX
PA2/SSICLK
PA3/SSIFSS
PA4/SSIRX
PA5/SSITX
PC0/TCK/SWCLK
PC1/TMS/SWDIO
PC2/TDI
PC3/TDO/SWO
PC4
PC5/CCP1
PC6/CCP3
PC7/CCP4
PE0/PWM4
PE1/PWM5
ADC0
ADC1
ADC2
ADC3
OSC0
OSC1
RST
GND
PB0/PWM2
PB1/PWM3
PB2/I2CSCL
PB3/I2CSDA
PB4/C0-
PB5/CCP5
PB6/C0+
PB7/TRST
PD0/PWM0
PD1/PWM1
PD2/U1RX
PD3/U1TX
PD4/CCP0
PD5/CCP2
PD6/FAULT
PD7
LDO
VDD
M17-PA0/U0RX
M18-PA1/U0TX
M19-PA2/SSICLK
M20-PA3/SSIFSS
M21-PA4/SSIRX
M22-PA5/SSITX
M40-TCK
M39-TMS_SWDIO
M38-TDI
M37-TDO_SWO
M14-PC4
M13-PC5
M12-PC6
M11-PC7
M35-PE0/PWM4
M36-PE1/PWM5
M1-ADC0
M2-ADC1
M3-ADC2
M4-ADC3
M5-REST
M29-PB0/PWM2
M30-PB1/PWM3
M33-PB2/I2CSCL
M34-PB3/I2CSDA
M44-PB4/C0-
M43-PB5
M42-PB6/C0+
M41-PB7
M25-PD0/PWM0
M26-PD1/PWM1
M27-PD2/U1RX
M28-PD3/U1TX
M45-PD4
M46-PD5
M47-PD6
M48-PD7
M6-LDO
+3.3V
R1 10K
R2 27R
R3 10K
R4 27R
R18 220R
R19 10K
R20 0R
R21 0R
R30
R31 0R
R32 75R
R33 100R
R34 127R
R35 75R
R36 100R
R37 127R
R38 1K
R39 1K
R40 1K
R41 1K
R42 1K
R43 1K
S1
S2
D1
MBR0520
F19-USBRSTN
EXTDBGENN
Y1
6MHz
C1 18pf
C2 18pf
C3 0.1uf
C4 0.1uf
C5 0.1uf
C6 0.1uf
C7 0.1uf
C8 1uf
C9 0.01uf
C10 0.1uf
D2
LED
Red
M13-PC5
M14-PC4
M17-PA0/U0RX
F40-VCP_RX
M18-PA1/U0TX
VCP_TX
J1
CON_A
M1-ADC0
M2-ADC1
M3-ADC2
M4-ADC3
M48-PD7
M47-PD6
M46-PD5
M45-PD4
M44-PB4/C0-
M43-PB5
M42-PB6/C0+
M41-PB7
M40-TCK
M39-TMS_SWDIO
M38-TDI
M37-TDO_SWO
M33-PB2/I2CSCL
M34-PB3/I2CSDA
M35-PE0/PWM4
M36-PE1/PWM5
M5-REST
+3.3V
+3.3V
GND
M11-PC7
M12-PC6
M13-PC5
M14-PC4
M17-PA0/U0RX
M18-PA1/U0TX
M19-PA2/SSICLK
M20-PA3/SSIFSS
M21-PA4/SSIRX
M22-PA5/SSITX
M25-PD0/PWM0
M26-PD1/PWM1
M27-PD2/U1RX
M28-PD3/U1TX
M29-PB0/PWM2
M30-PB1/PWM3
+5V
M30-PB1/PWM3
M35-PE0/PWM4
M36-PE1/PWM5
Q1
Q2
Q3
3904
L6
L7
L8
LED_S
Blue
Green
Red
M25-PD0/PWM0
M26-PD1/PWM1
M29-PB0/PWM2
Q4
Q5
Q6
L3
L4
L5
COMPANY:
TITLE:
EK-LM3S811 Evaluation Board
DRAWN:
DATED:
CHECKED:
DATED:
QUALITY CONTROL:
DATED:
RELEASED:
DATED:
CODE:
SIZE:
B
DRAWING NO:
1.2
REV:
SCALE:
SHEET: 1 OF 3

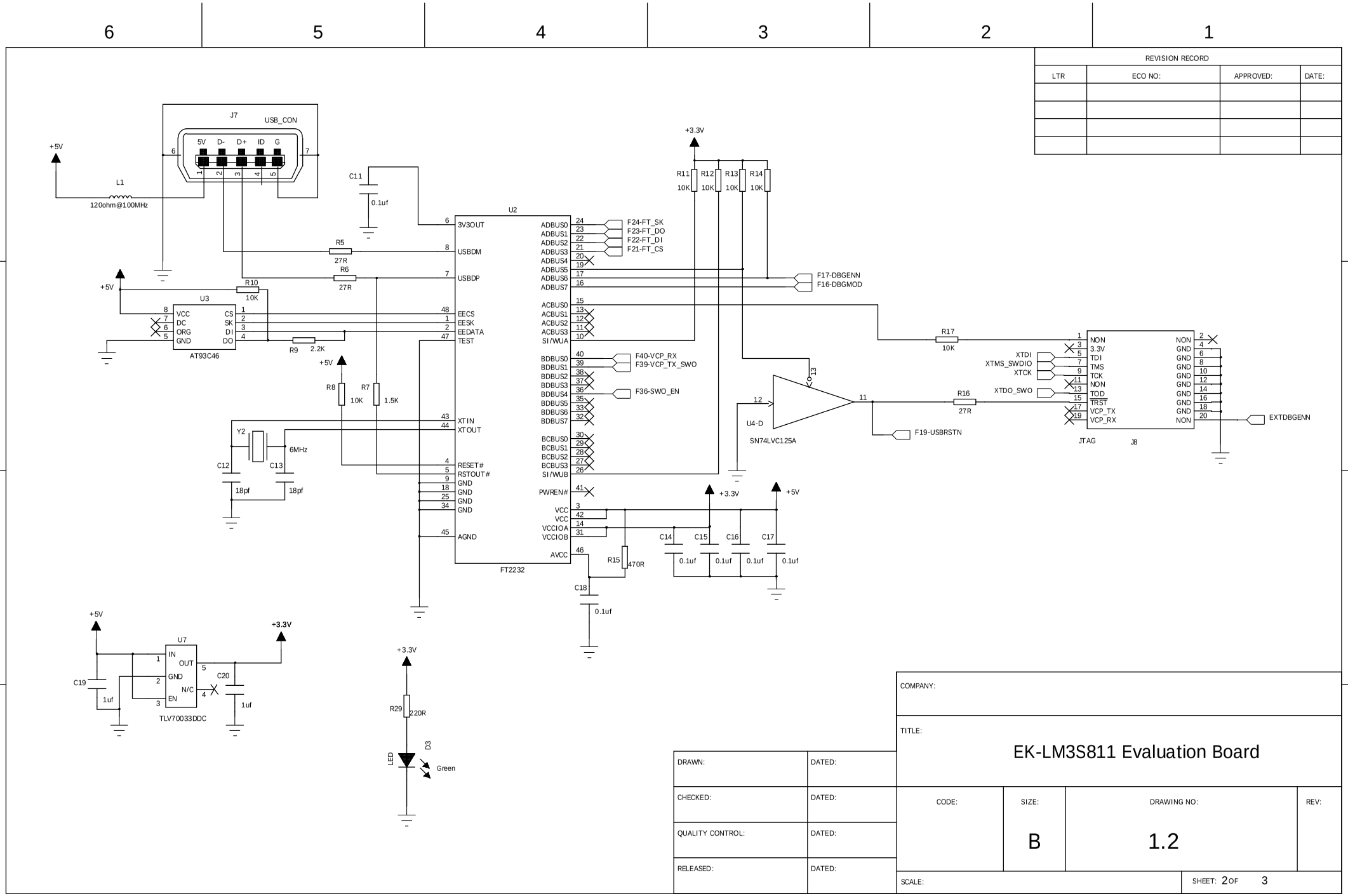
REVISION RECORD
LTR
ECO NO:
APPROVED:
DATE:
J7
USB_CON
5V D- D+ ID G
+5V
L1
120ohm@100MHz
C11
0.1uf
U2
3V3OUT
USBDM
USBDP
EECS
EESK
EEDATA
TEST
XTIN
XTOUT
RESET#
RSTOUT#
GND
AGND
ADBUS0
ADBUS1
ADBUS2
ADBUS3
ADBUS4
ADBUS5
ADBUS6
ADBUS7
ACBUS0
ACBUS1
ACBUS2
ACBUS3
SI/WUA
BDBUS0
BDBUS1
BDBUS2
BDBUS3
BDBUS4
BDBUS5
BDBUS6
BDBUS7
BCBUS0
BCBUS1
BCBUS2
BCBUS3
SI/WUB
PWREN#
VCC
VCCIOA
VCCIOB
AVCC
FT2232
F24-FT_SK
F23-FT_DO
F22-FT_DI
F21-FT_CS
F17-DBGENN
F16-DBGMOD
F40-VCP_RX
F39-VCP_TX_SWO
F36-SWO_EN
R5
27R
R6
27R
R10
10K
U3
VCC
DC
ORG
GND
CS
SK
DI
DO
AT93C46
R9
2.2K
R8
10K
R7
1.5K
Y2
6MHz
C12
18pf
C13
18pf
R11
10K
R12
10K
R13
10K
R14
10K
+3.3V
U4-D
SN74LVC125A
R17
10K
R16
27R
F19-USBRSTN
XTDI
XTMS_SWDIO
XTCK
XTDO_SWO
NON
3.3V
TDI
TMS
TCK
TOD
TRST
VCP_TX
VCP_RX
GND
JTAG
J8
EXTDBGENN
C14
C15
C16
C17
0.1uf
R15
470R
C18
0.1uf
U7
IN
OUT
GND
N/C
EN
TLV70033DDC
C19
1uf
C20
1uf
R29
220R
LED
D3
Green
DRAWN:
DATED:
CHECKED:
DATED:
QUALITY CONTROL:
DATED:
RELEASED:
DATED:
COMPANY:
TITLE:
EK-LM3S811 Evaluation Board
CODE:
SIZE:
B
DRAWING NO:
1.2
REV:
SCALE:
SHEET: 2 OF 3

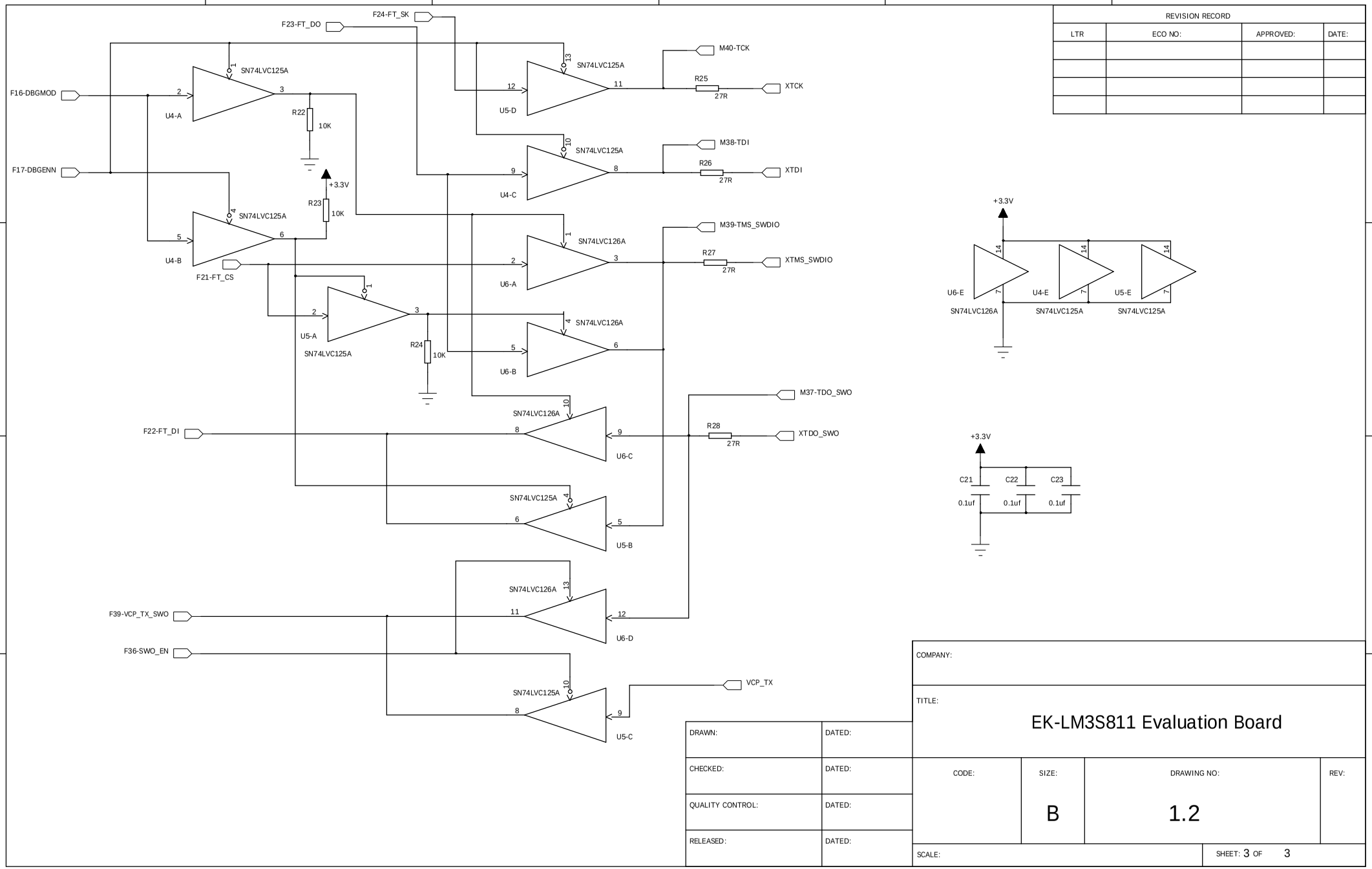

REVISION RECORD			
LTR	ECO NO:	APPROVED:	DATE:

DRAWN:	DATED:
CHECKED:	DATED:
QUALITY CONTROL:	DATED:
RELEASED:	DATED:

COMPANY:

TITLE: EK-LM3S811 Evaluation Board

CODE:	SIZE:	DRAWING NO:	REV:
	B	1.2	

SCALE:

SHEET: 3 OF 3