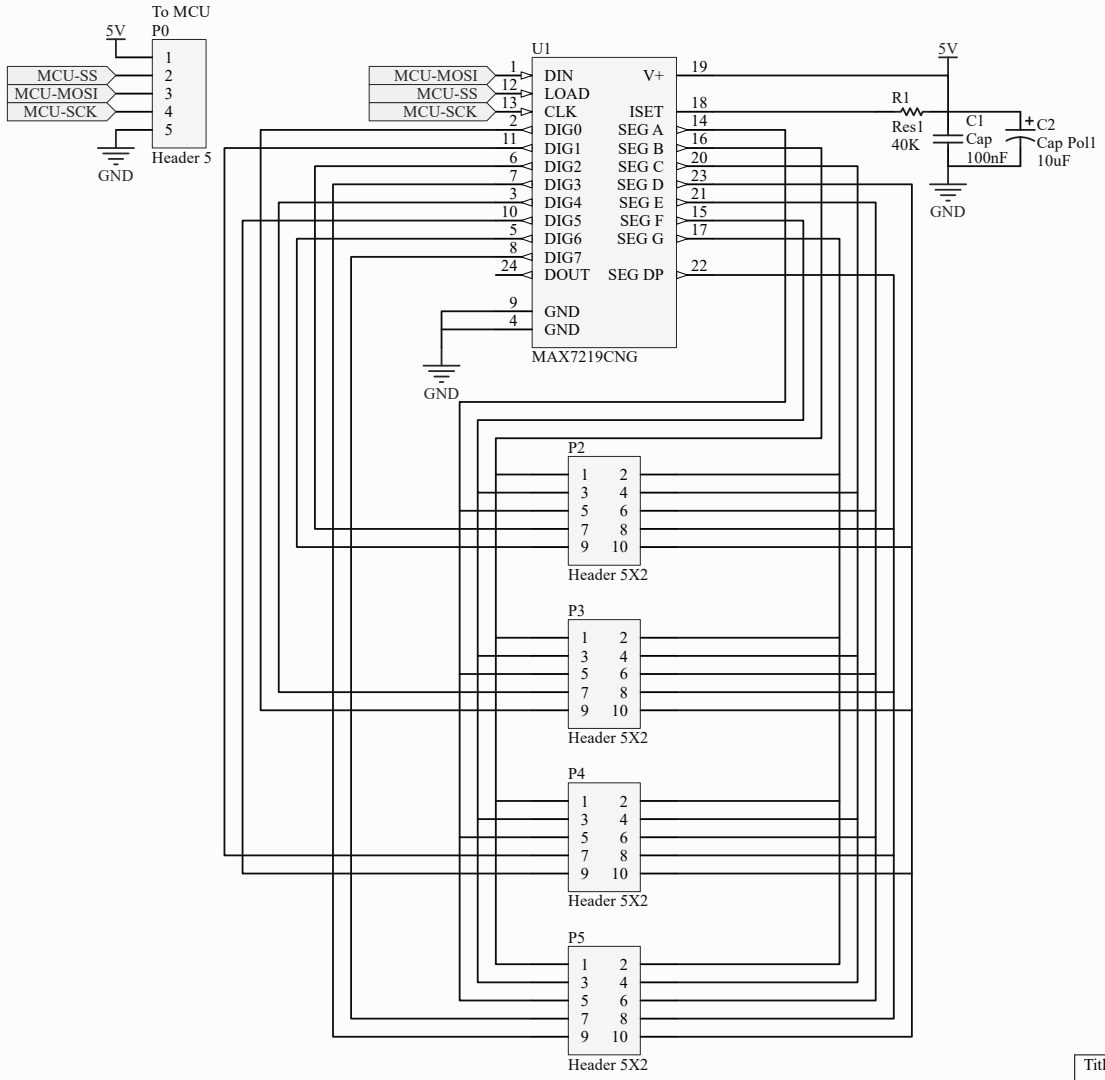

Title			
Size A4	Number		Revision
Date: 25-Jun-16		Sheet of	
File: D:\sudosx\..\VDMEDA_7SegDriver.SchDoc		Drawn By:	