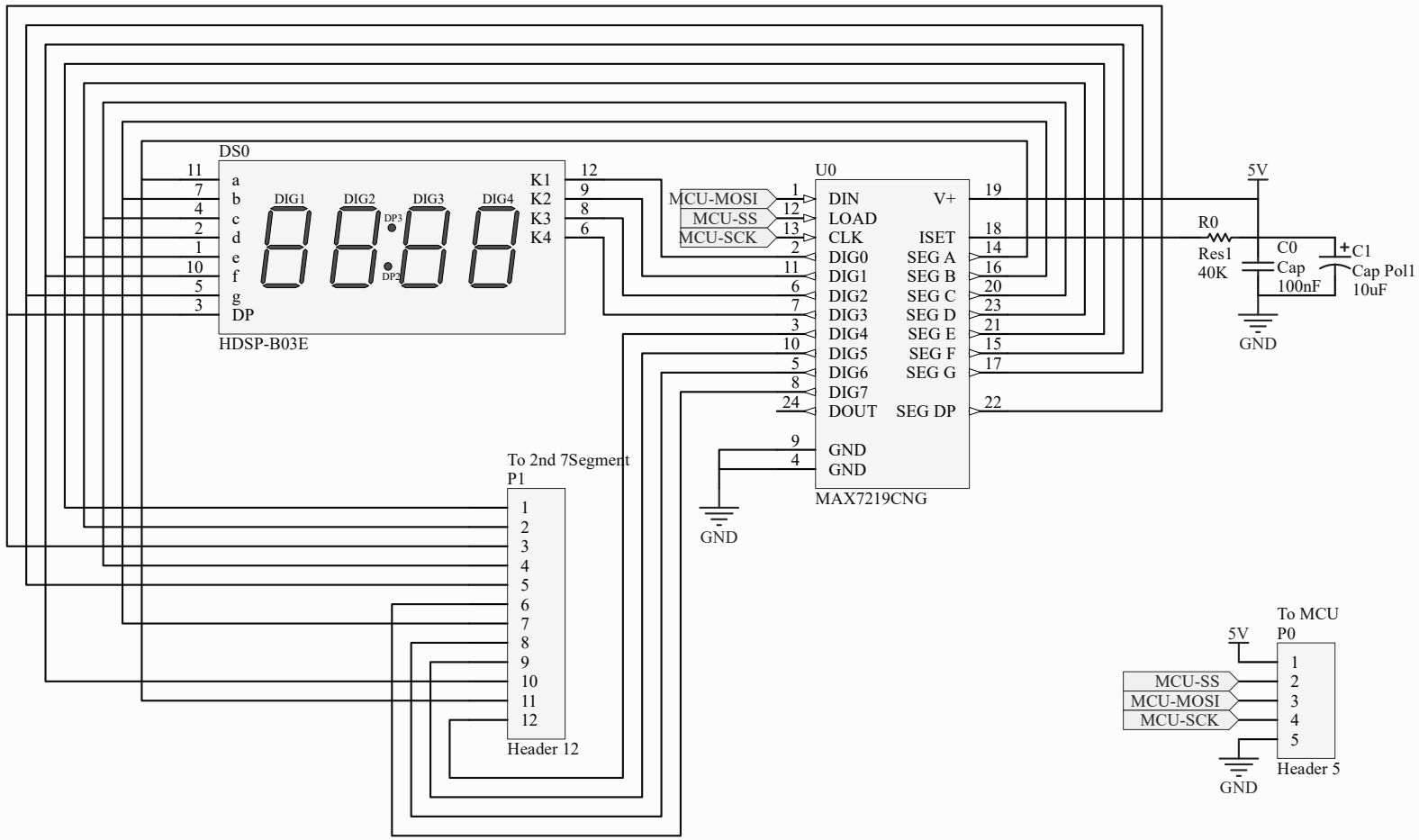


| | | |
|---|---|---|
| Title | | |
| Size A | Number | Revision |
| Date: 24-Jun-16 | Sheet of | |
| File: D:\sudosx\..\VDMEDA_DisplayMaster.SchDoc | Drawn By: | |