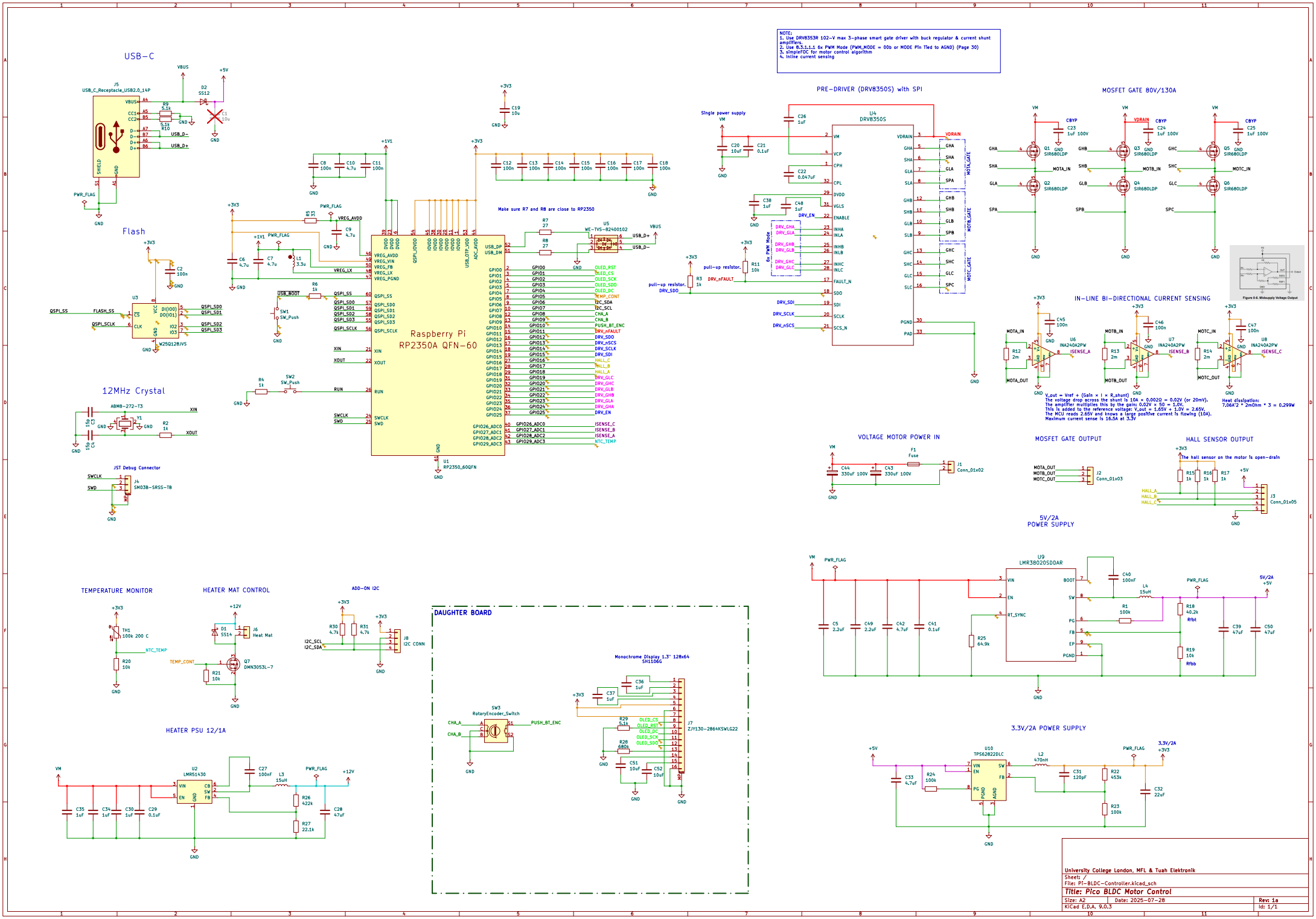
NOTE:
1. Use DRV8353R 102-V max 3-phase smart gate driver with buck regulator & current shunt amplifiers.
2. Use 8.3.1.1.1 6x PWM Mode (PWM_MODE = 00b or MODE Pin Tied to AGND) (Page 30)
3. simpleFOC for motor control algorithm
4. Inline current sensing
USB-C
J5
USB_C_Receptacle_USB2.0_14P
Flash
W25Q128JVS
12MHz Crystal
ABM8-272-T3
JST Debug Connector
SM03B-SRSS-TB
Raspberry Pi
RP2350A QFN-60
U1
RP2350_60QFN
Make sure R7 and R8 are close to RP2350
U5
WE-TVS-82400102
PRE-DRIVER (DRV8350S) with SPI
U4
DRV8350S
Single power supply
MOSFET GATE 80V/130A
Q1 SIR680LDP
Q2 SIR680LDP
Q3 SIR680LDP
Q4 SIR680LDP
Q5 SIR680LDP
Q6 SIR680LDP
IN-LINE BI-DIRECTIONAL CURRENT SENSING
U6 INA240A2PW
U7 INA240A2PW
U8 INA240A2PW
V_out = Vref + (Gain × I × R_shunt)
The voltage drop across the shunt is 10A × 0.002Ω = 0.02V (or 20mV).
The amplifier multiplies this by the gain: 0.02V × 50 = 1.0V.
This is added to the reference voltage: V_out = 1.65V + 1.0V = 2.65V.
The MCU reads 2.65V and knows a large positive current is flowing (10A).
Maximum current sense is 16.5A at 3.3V
Heat dissipation:
7.06A^2 * 2mOhm * 3 = 0.299W
VOLTAGE MOTOR POWER IN
MOSFET GATE OUTPUT
HALL SENSOR OUTPUT
The hall sensor on the motor is open-drain
5V/2A
POWER SUPPLY
U9
LMR38020SDDAR
TEMPERATURE MONITOR
HEATER MAT CONTROL
ADD-ON I2C
DAUGHTER BOARD
Monochrome Display 1.3" 128x64
SH1106G
J7
ZJY130-2864KSWLG22
HEATER PSU 12/1A
U2
LMR51430
3.3V/2A POWER SUPPLY
U10
TPS62822DLC
University College London, MFL & Tuah Elektronik
Sheet: /
File: PI-BLDC-Controller.kicad_sch
Title: Pico BLDC Motor Control
Size: A2
Date: 2025-07-28
Rev: 1a
KiCad E.D.A. 9.0.3
Id: 1/1