US011159661B2

(12) **United States Patent**
Yoon et al.

(10) **Patent No.: US 11,159,661 B2**
(45) **Date of Patent: Oct. 26, 2021**

(54) **CAMERA MODULE AND PORTABLE ELECTRONIC DEVICE INCLUDING THE SAME**

(71) Applicant: **Samsung Electro-Mechanics Co., Ltd.**, Suwon-si (KR)

(72) Inventors: **Young Bok Yoon**, Suwon-si (KR); **Nam Ki Park**, Suwon-si (KR); **Bong Won Jeong**, Suwon-si (KR); **Sang Ho Seo**, Suwon-si (KR); **Jae Kyung Kim**, Suwon-si (KR)

(73) Assignee: **Samsung Electro-Mechanics Co., Ltd.**, Suwon-si (KR)

(*) Notice: Subject to any disclaimer, the term of this patent is extended or adjusted under 35 U.S.C. 154(b) by 0 days.

(21) Appl. No.: **16/675,413**

(22) Filed: **Nov. 6, 2019**

(65) **Prior Publication Data**

US 2020/0084308 A1 Mar. 12, 2020

Related U.S. Application Data

(63) Continuation of application No. 15/667,658, filed on Aug. 3, 2017, now Pat. No. 10,516,773.

(30) **Foreign Application Priority Data**

Oct. 13, 2016 (KR) 10-2016-0133159
Oct. 28, 2016 (KR) 10-2016-0142310
Feb. 24, 2017 (KR) 10-2017-0024505

(51) **Int. Cl.**
H04M 1/02 (2006.01)
H04N 5/232 (2006.01)
(Continued)

(52) **U.S. Cl.**
CPC ***H04M 1/0264*** (2013.01); ***G02B 7/08*** (2013.01); ***G02B 7/10*** (2013.01); ***G02B 7/1821*** (2013.01);
(Continued)

(58) **Field of Classification Search**
CPC ... H04M 1/0264; G02B 13/0035; G02B 7/08; G02B 7/1821; G02B 27/646; G02B 7/10;
(Continued)

(56) **References Cited**

U.S. PATENT DOCUMENTS

5,041,852 A 8/1991 Misawa et al.
5,241,422 A * 8/1993 Shimada G02B 7/10 359/694
(Continued)

FOREIGN PATENT DOCUMENTS

CN 101408653 A 4/2009
CN 207424496 U 5/2018
(Continued)

OTHER PUBLICATIONS

Chinese Office Action dated Jan. 2, 2020 in counterpart Chinese Patent Application No. 201710860599.X (11 pages in English and 9 pages in Chinese).
(Continued)

Primary Examiner — Timothy J Henn
(74) *Attorney, Agent, or Firm* — NSIP Law

(57) **ABSTRACT**

A camera module includes a lens module including lenses and a reflecting module disposed in front of the lens module. The reflecting module is configured to change a path of light to direct the light toward the lens module. The reflecting module includes a holder in which a reflecting member configured to change the path of the light is mounted and a first housing supporting the holder. The holder is configured to slide with respect to the first housing to enable rotation of the reflecting member with respect to a first axis and a second axis.

18 Claims, 20 Drawing Sheets

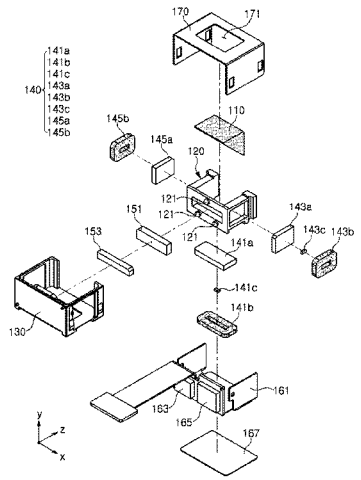

(51) **Int. Cl.**

G02B 27/64	(2006.01)
G02B 13/00	(2006.01)
G02B 7/08	(2021.01)
G02B 7/182	(2021.01)
G02B 7/10	(2021.01)
H04N 5/225	(2006.01)

(52) **U.S. Cl.**
CPC ***G02B 13/009*** (2013.01); ***G02B 13/0015*** (2013.01); ***G02B 13/0035*** (2013.01); ***G02B 27/646*** (2013.01); ***H04N 5/2253*** (2013.01); ***H04N 5/2254*** (2013.01); ***H04N 5/2257*** (2013.01); ***H04N 5/23258*** (2013.01); ***H04N 5/23264*** (2013.01); ***H04N 5/23287*** (2013.01); *G03B 2205/0053* (2013.01)

(58) **Field of Classification Search**
CPC G02B 13/0015; G02B 13/009; H04N 5/23287; H04N 5/23258; H04N 5/2257; H04N 5/2254; H04N 5/23264; H04N 5/2253; G03B 2205/0053
See application file for complete search history.

(56) **References Cited**

U.S. PATENT DOCUMENTS

8,687,276	B2	4/2014	Cho et al.	
10,516,773	B2 *	12/2019	Yoon	H04N 5/23264
2004/0174614	A1	9/2004	Hovanky	
2005/0057659	A1 *	3/2005	Hasegawa	H04N 5/23248 348/208.11
2006/0269263	A1	11/2006	Kim et al.	
2008/0080053	A1	4/2008	Homme	
2008/0266404	A1	10/2008	Sato	
2009/0097837	A1	4/2009	Chen et al.	
2009/0122406	A1	5/2009	Rouvinen et al.	
2009/0185266	A1	7/2009	Stromberg et al.	
2010/0226010	A1	9/2010	Kwan et al.	
2011/0181955	A1	7/2011	Cho et al.	
2013/0242057	A1	9/2013	Hong et al.	
2015/0002683	A1 *	1/2015	Hu	G02B 26/0816 348/208.2
2015/0042870	A1	2/2015	Chan et al.	
2015/0198783	A1 *	7/2015	Shimotsu	H02P 25/034 359/814
2015/0215541	A1	7/2015	Nomura et al.	
2015/0215542	A1 *	7/2015	Nomura	H04N 5/2254 348/208.11
2016/0044247	A1	2/2016	Shabtay et al.	
2016/0070088	A1 *	3/2016	Koguchi	G02B 13/009 359/696
2016/0161757	A1	6/2016	Hee et al.	
2018/0024329	A1	1/2018	Goldenberg et al.	
2018/0067335	A1	3/2018	Chen et al.	
2018/0095293	A1	4/2018	Yeon et al.	
2018/0109660	A1	4/2018	Yoon et al.	

FOREIGN PATENT DOCUMENTS

JP	2006-337987	A	12/2006
JP	3976683	B2	9/2007
JP	2016-12042	A	1/2016
KR	10-2009-0122892	A	12/2009
KR	10-2015-0091010	A	8/2015
WO	WO 02/079854	A2	10/2002

OTHER PUBLICATIONS

Korean Office Action dated Feb. 2, 2018, in corresponding Korean Patent Application No. 10-2017-0024505.

* cited by examiner

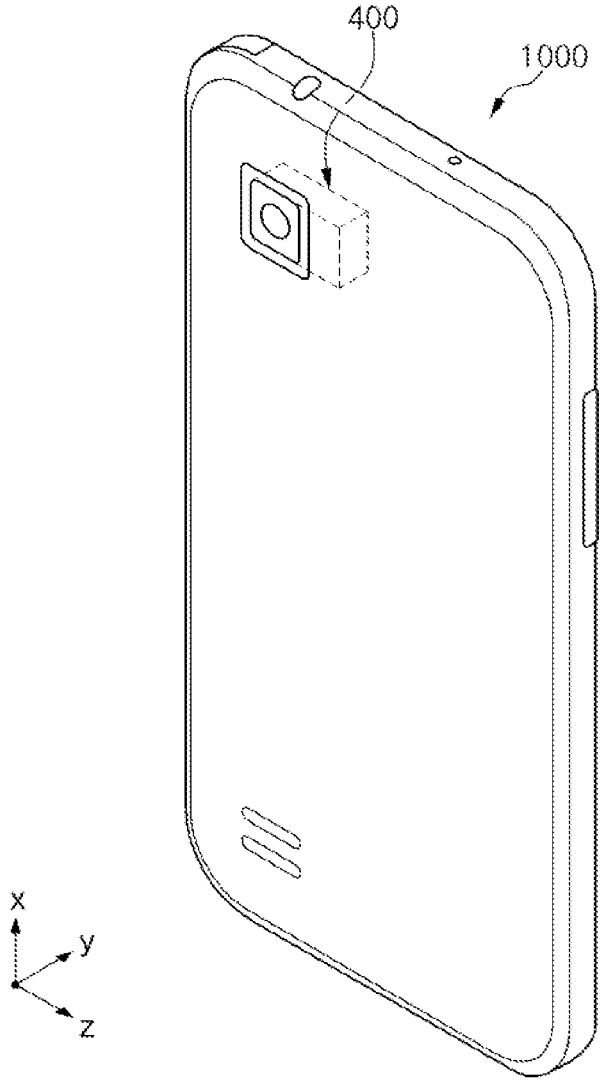

FIG. 1

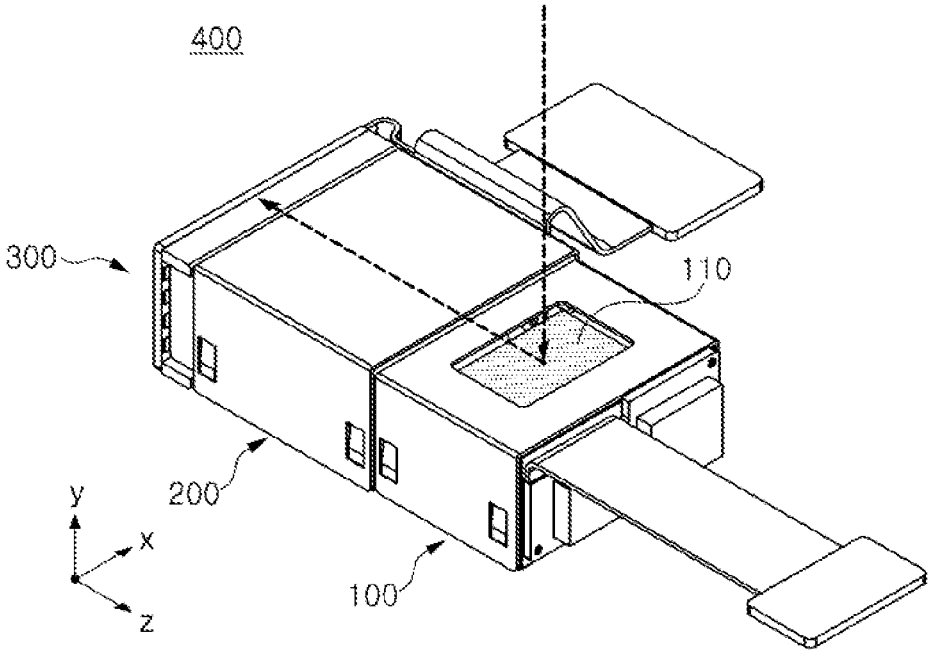

FIG. 2A

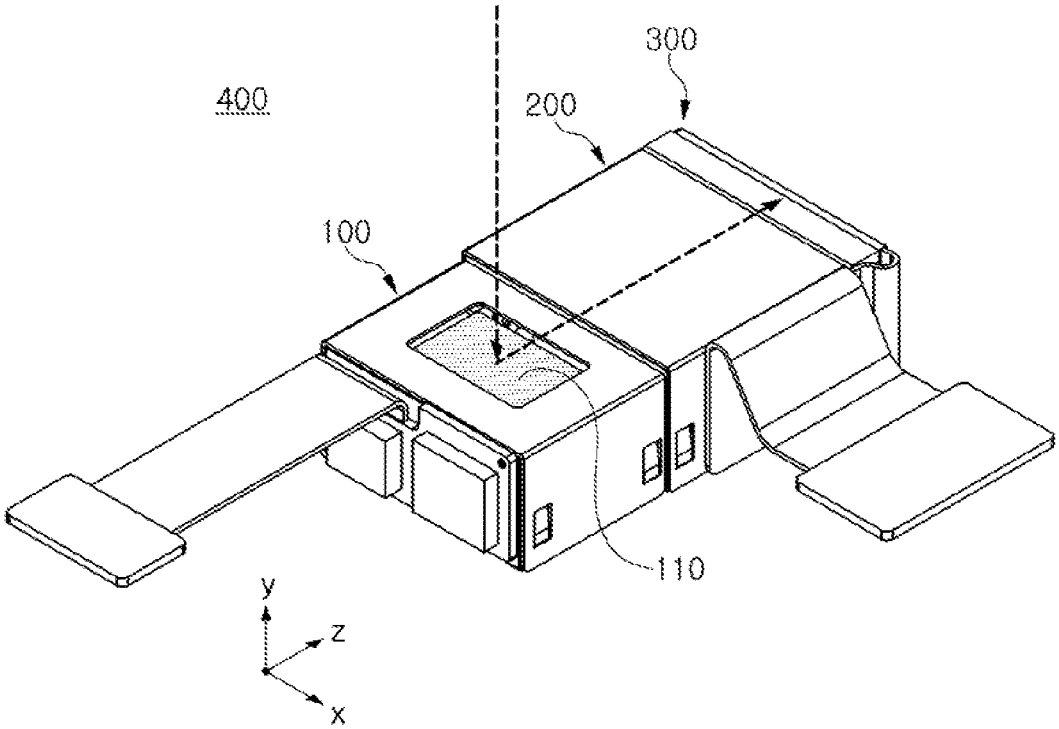

FIG. 2B

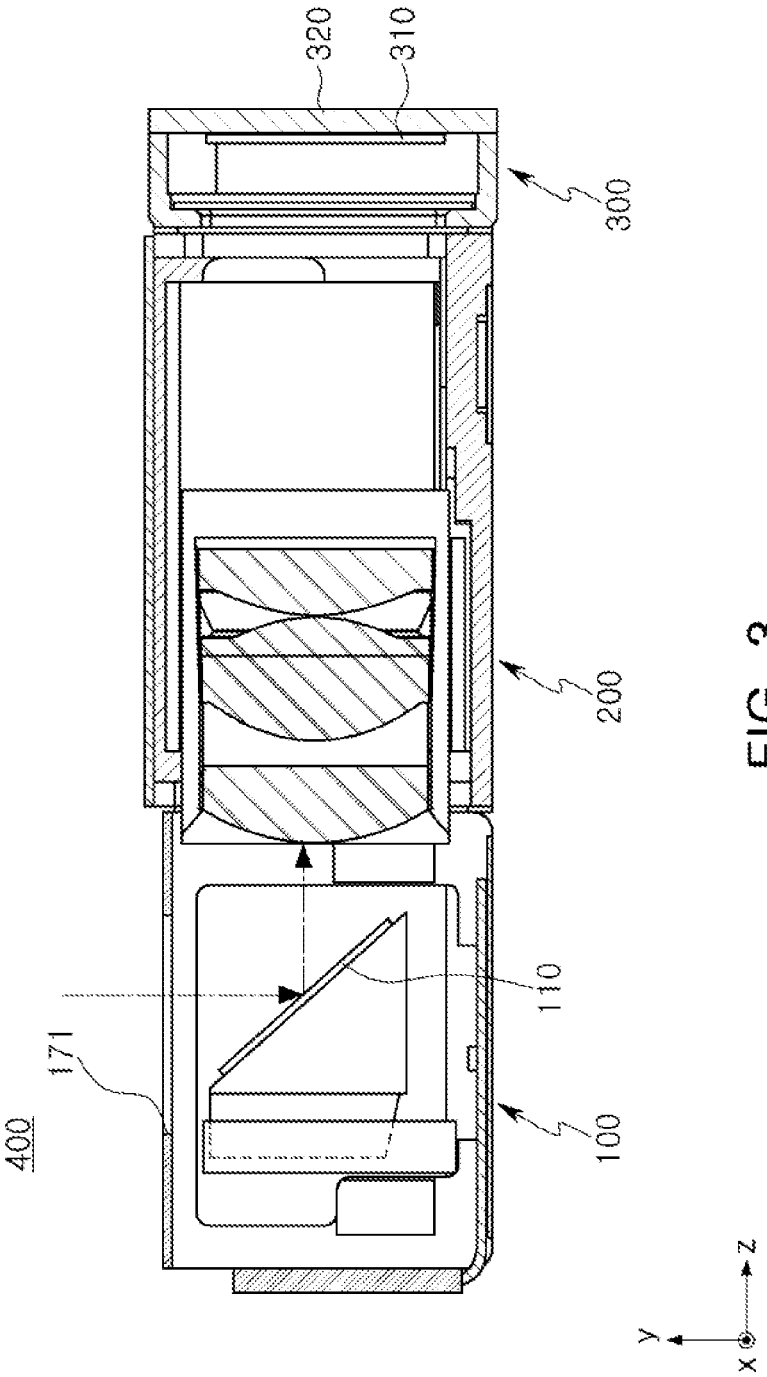

FIG. 3

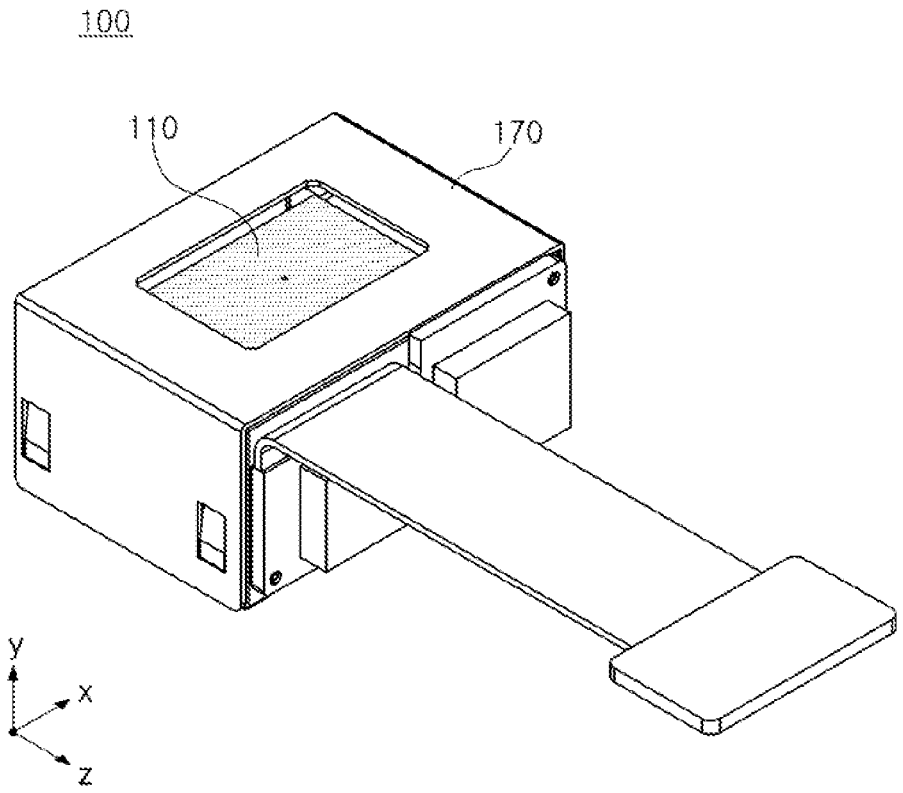

FIG. 4

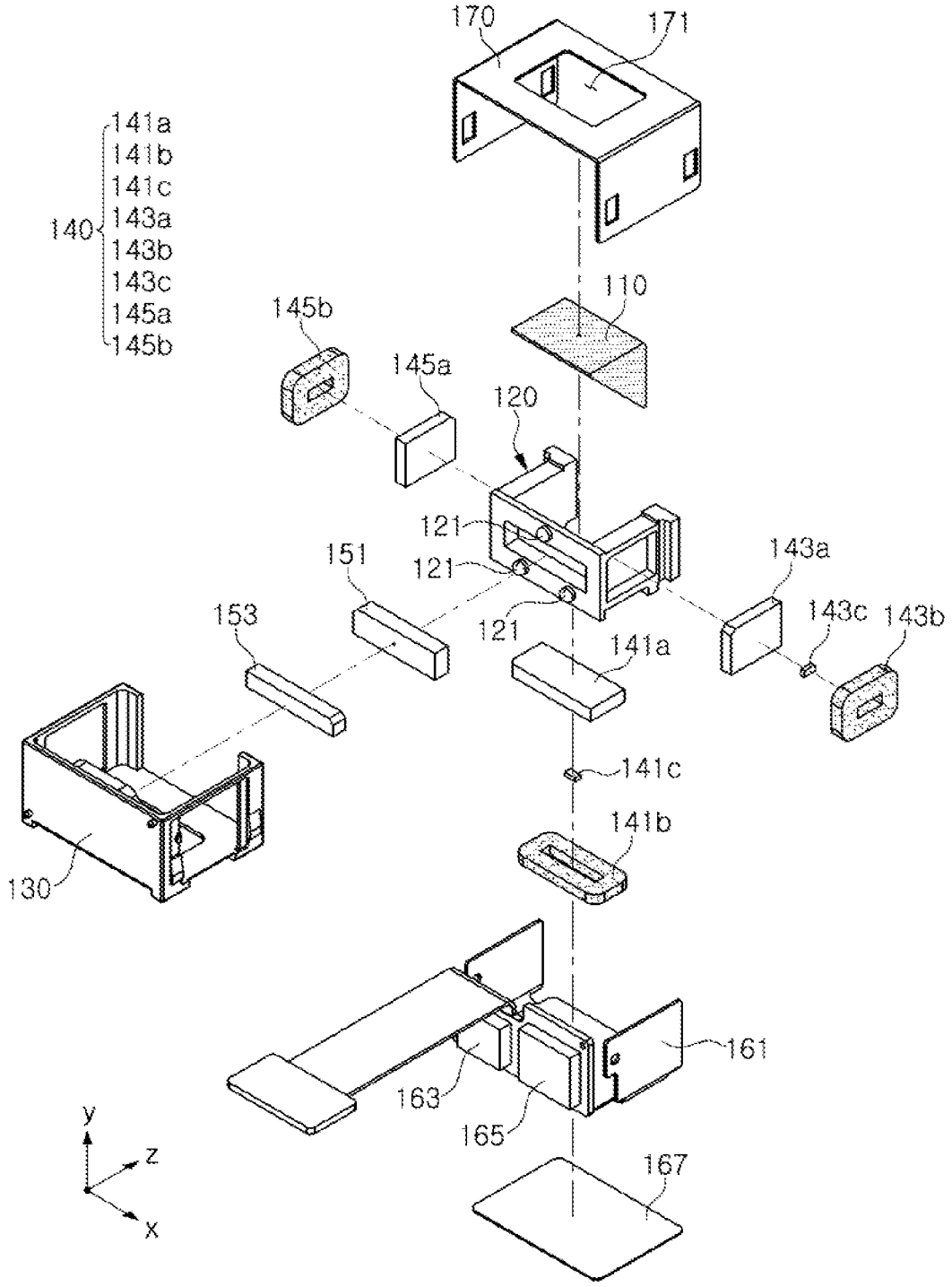
170
171
141a
141b
141c
140
143a
143b
143c
145a
145b
145b
110
145a
120
121
151
121
143a
153
121
143c
143b
141a
141c
141b
130
161
163
165
167
y
z
x

FIG. 5

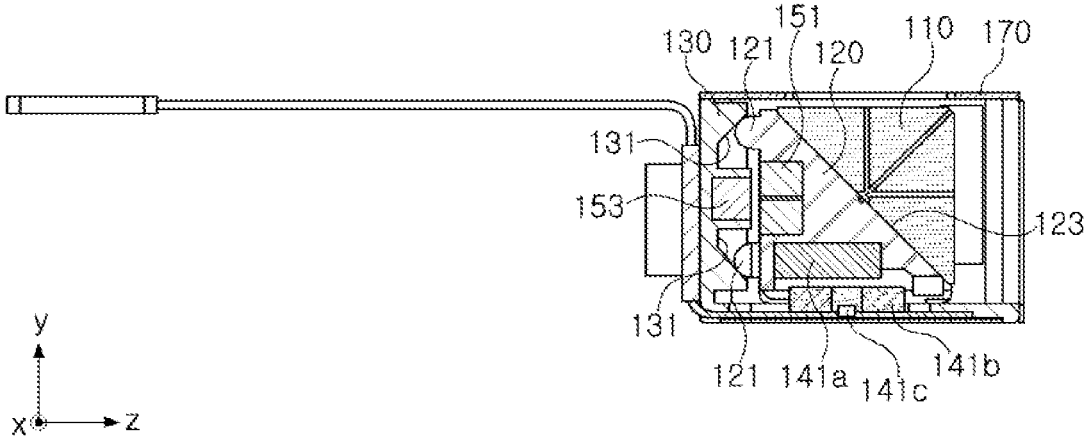
151
130
121
120
110
170
131
153
123
131
121
141a
141c
141b
y
x
z

FIG. 6

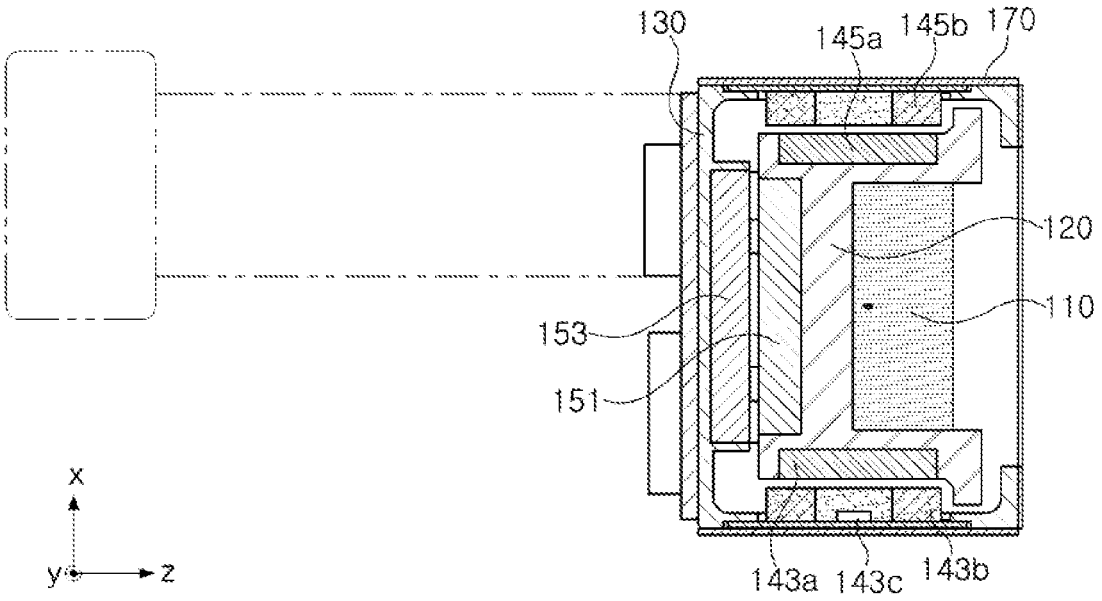
130
145a
145b
170
120
110
153
151
143a
143c
143b
x
y
z

FIG. 7

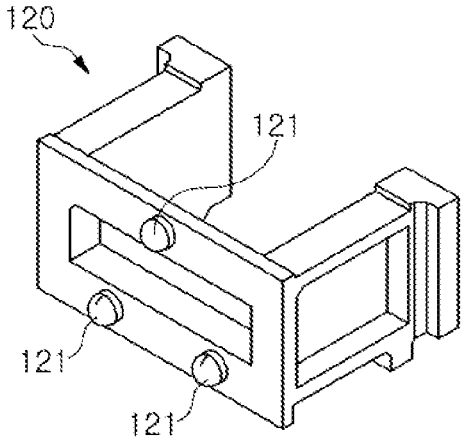

FIG. 8

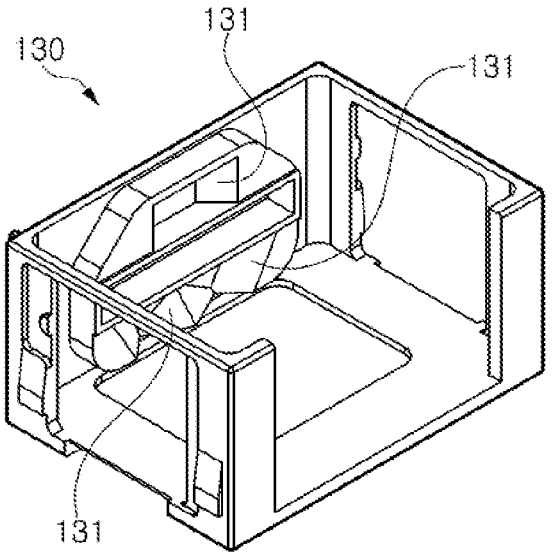

FIG. 9

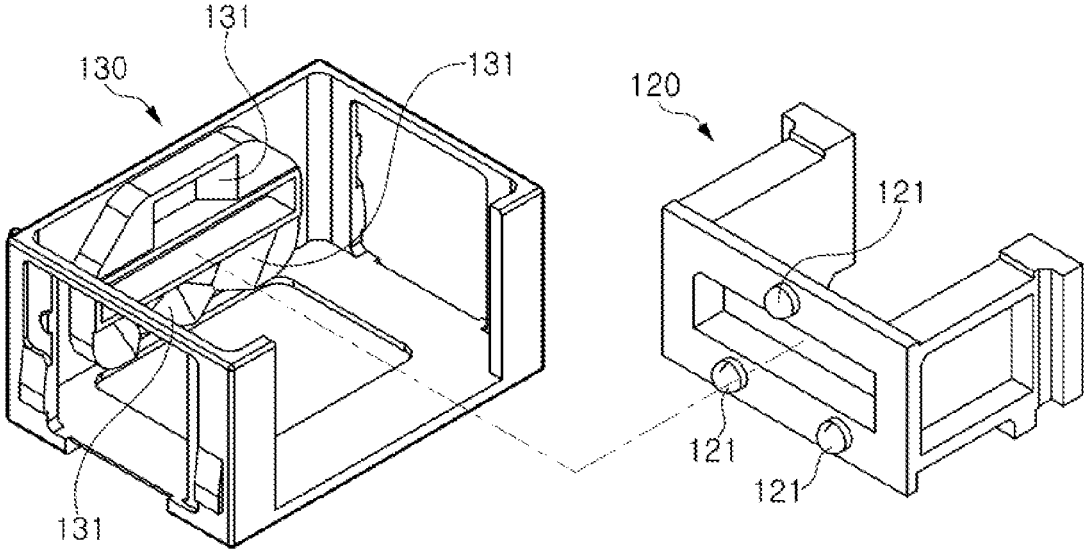

FIG. 10

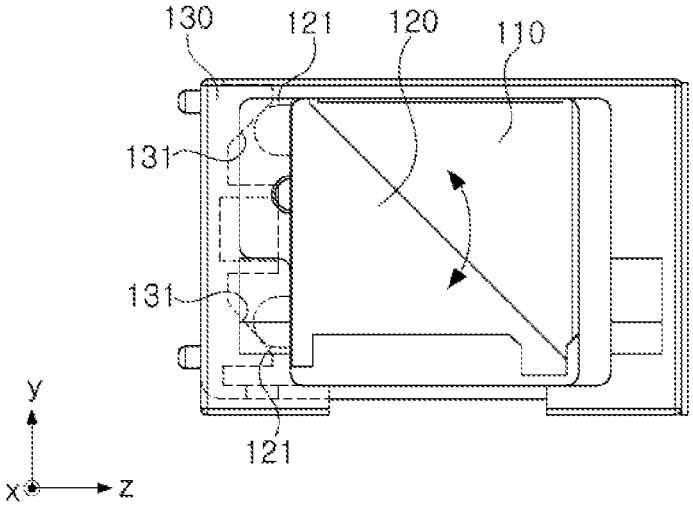

FIG. 11A

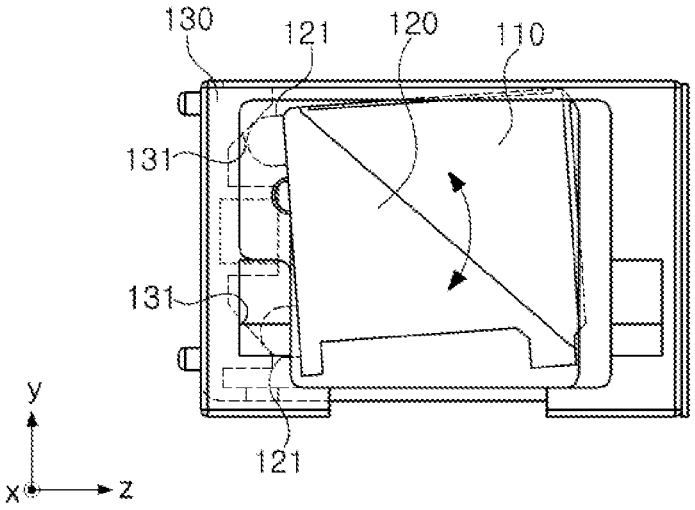

FIG. 11B

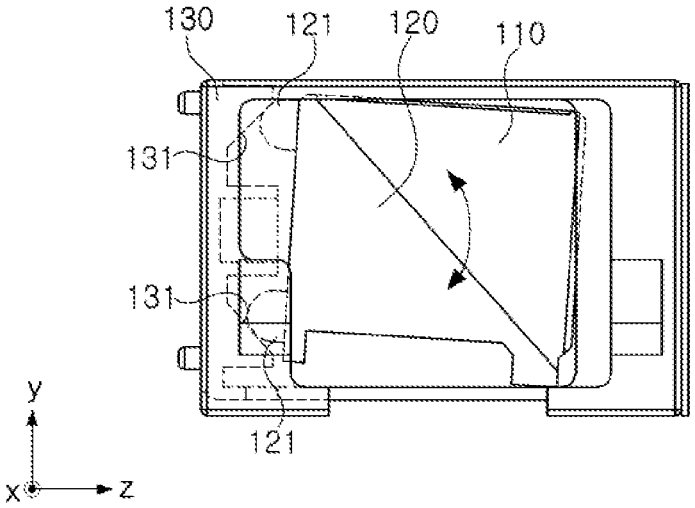

FIG. 11C

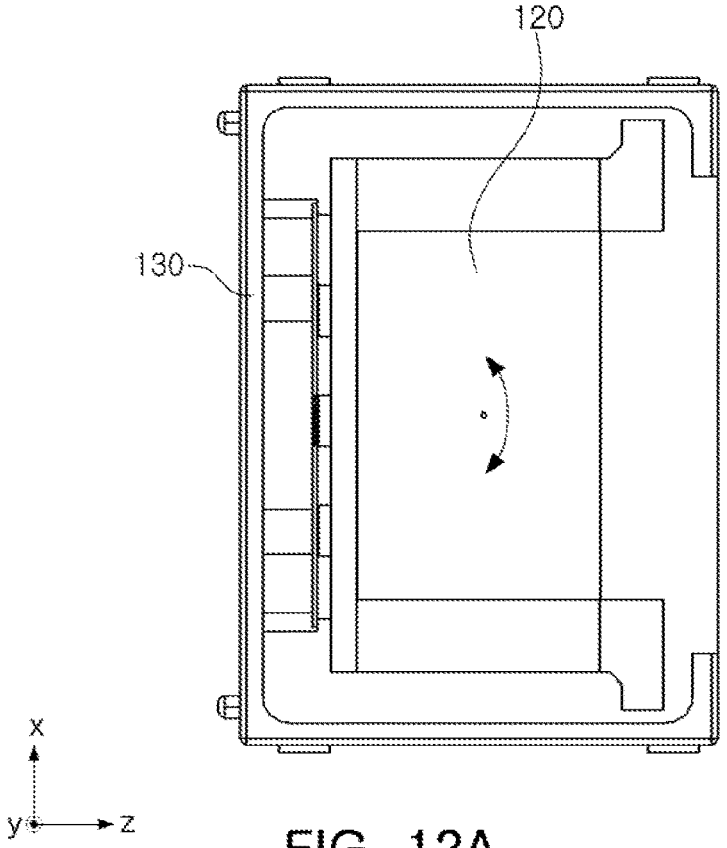

FIG. 12A

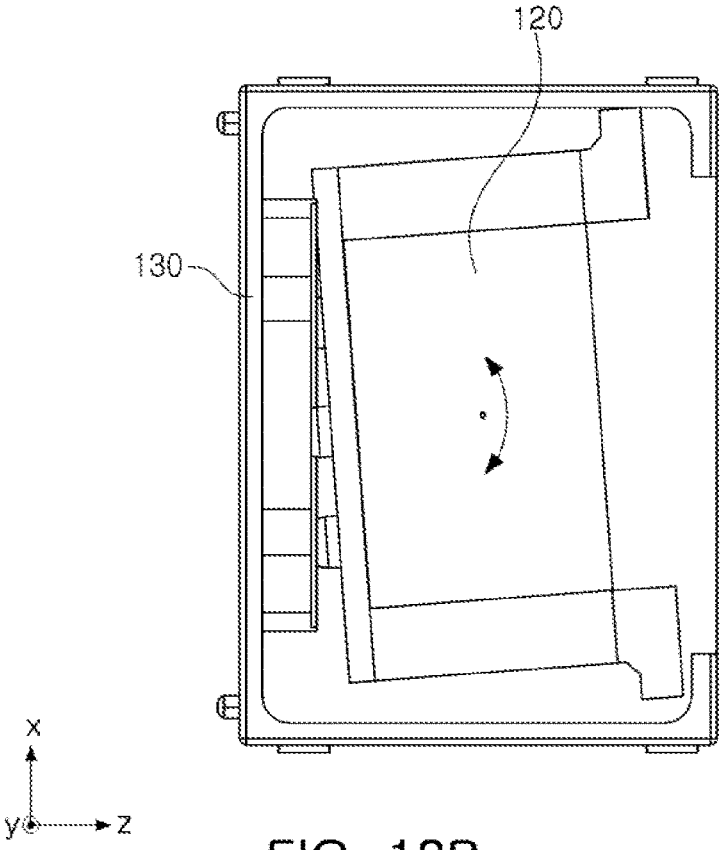

FIG. 12B

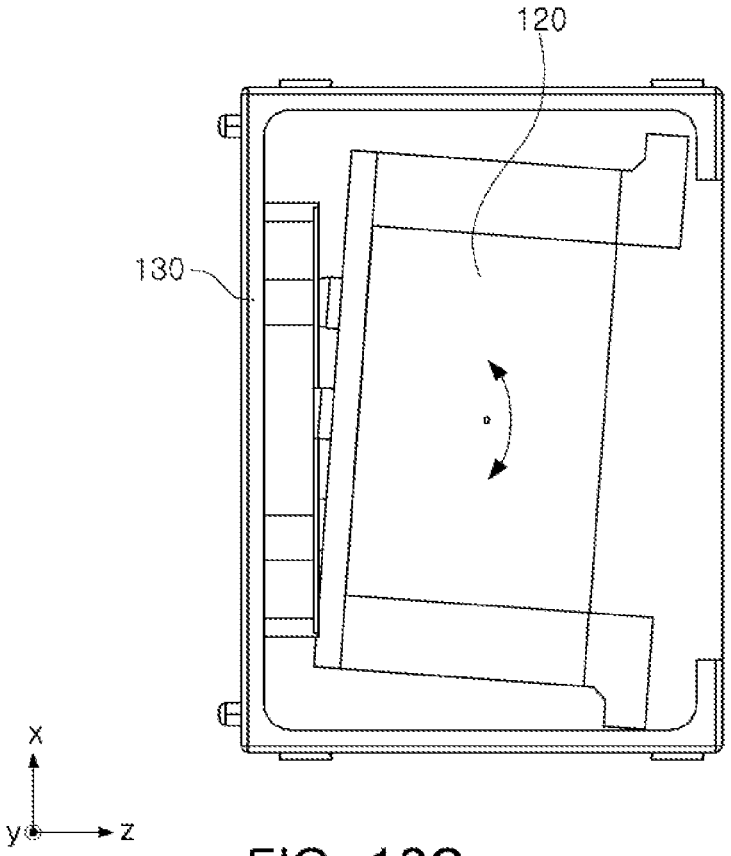

FIG. 12C

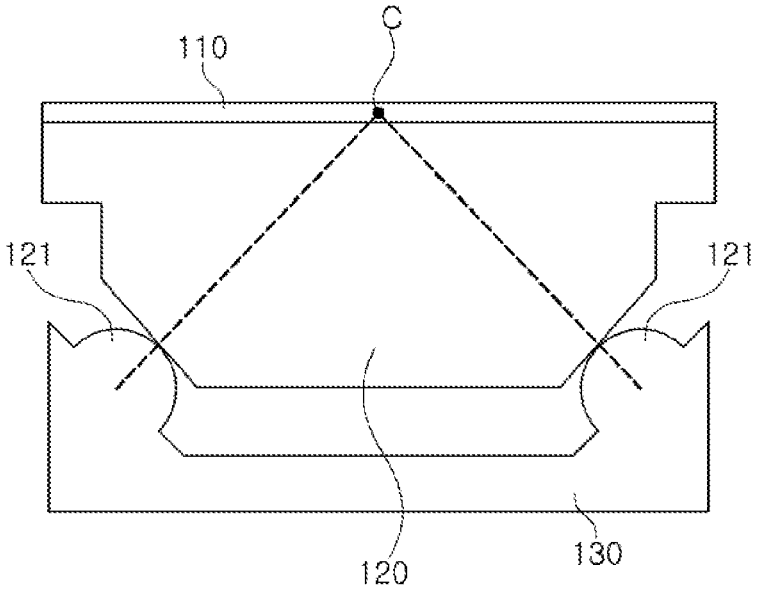

FIG. 13

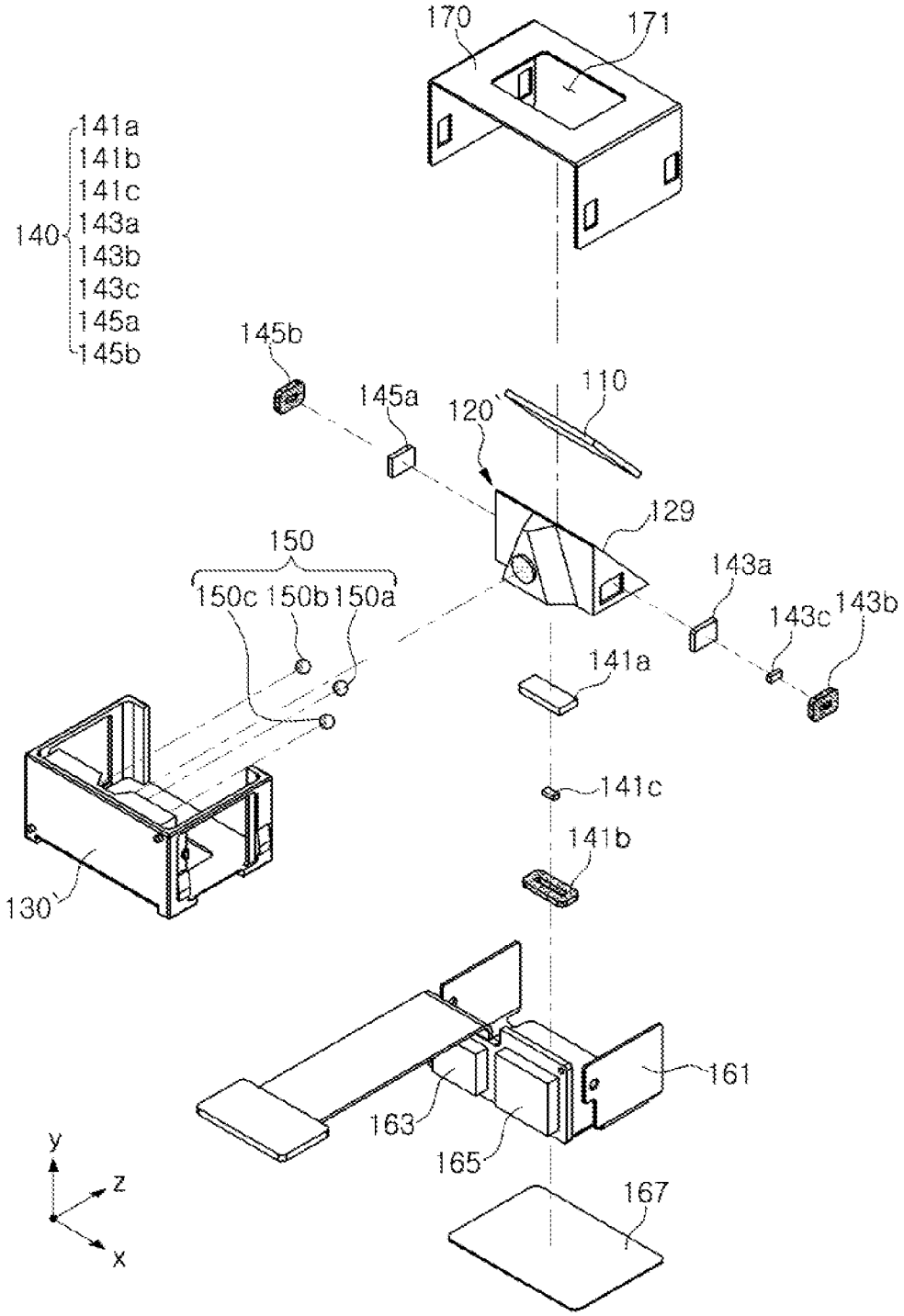
170
171
141a
141b
141c
140
143a
143b
143c
145a
145b
145b
145a
120
110
129
150
150c 150b 150a
143a
143c
143b
141a
141c
141b
130
161
163
165
167
y
z
x

FIG. 14

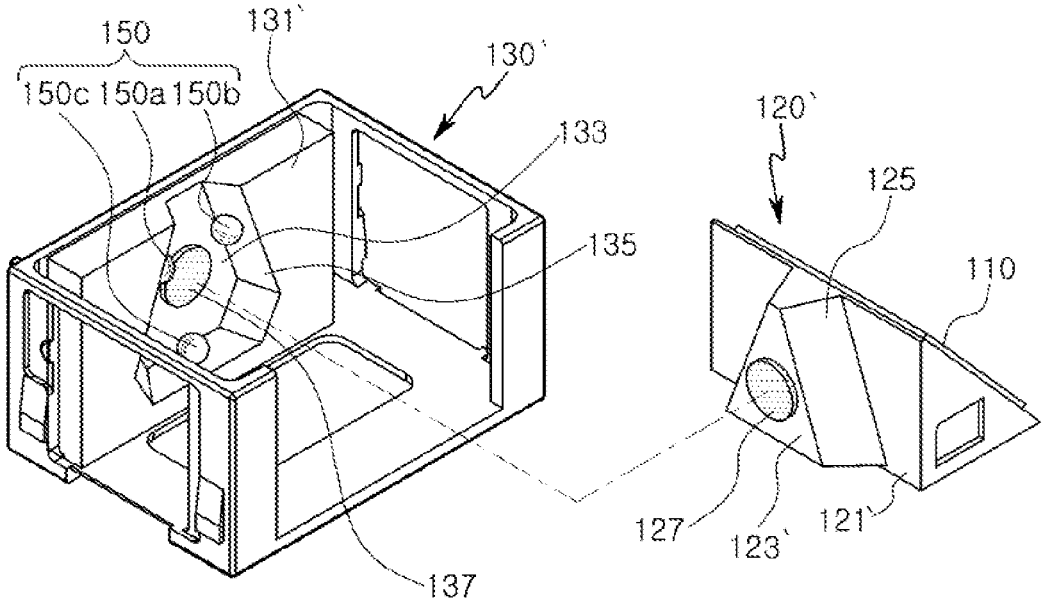

FIG. 15A

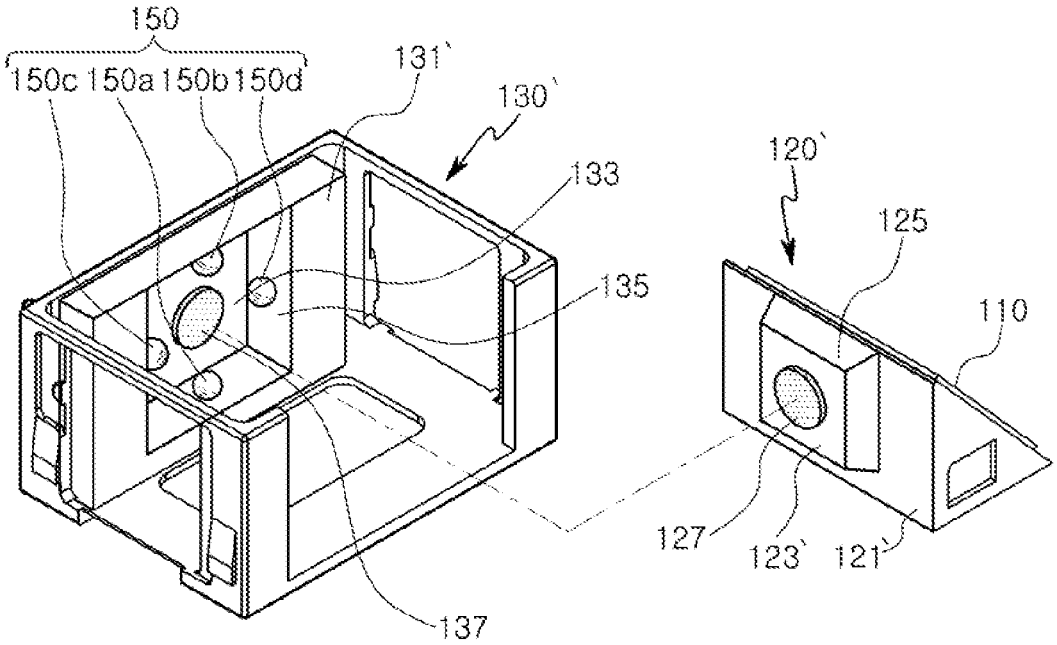

FIG. 15B

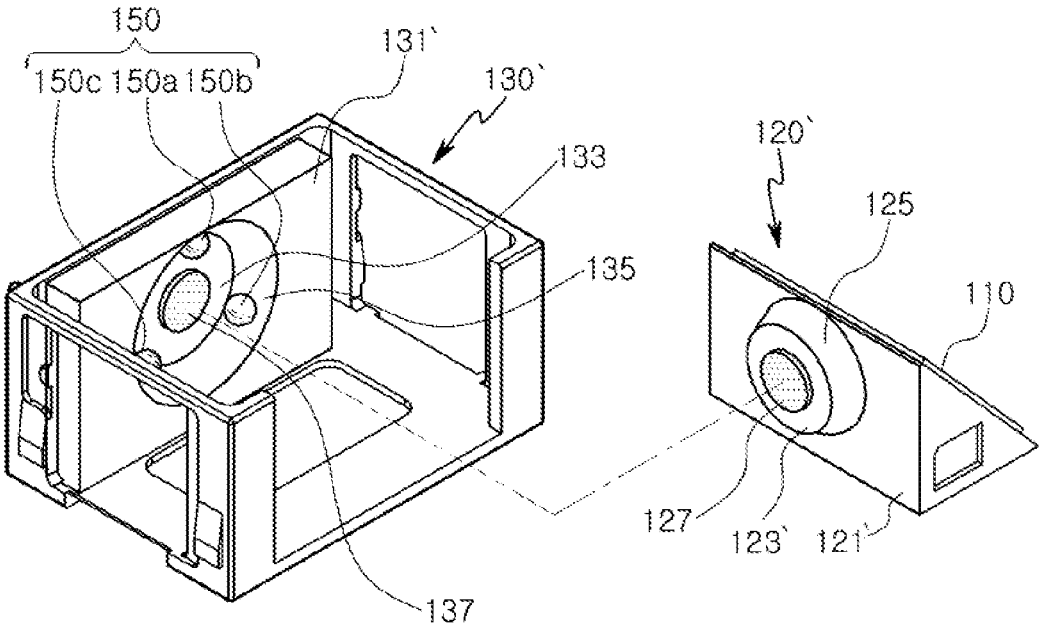

FIG. 15C

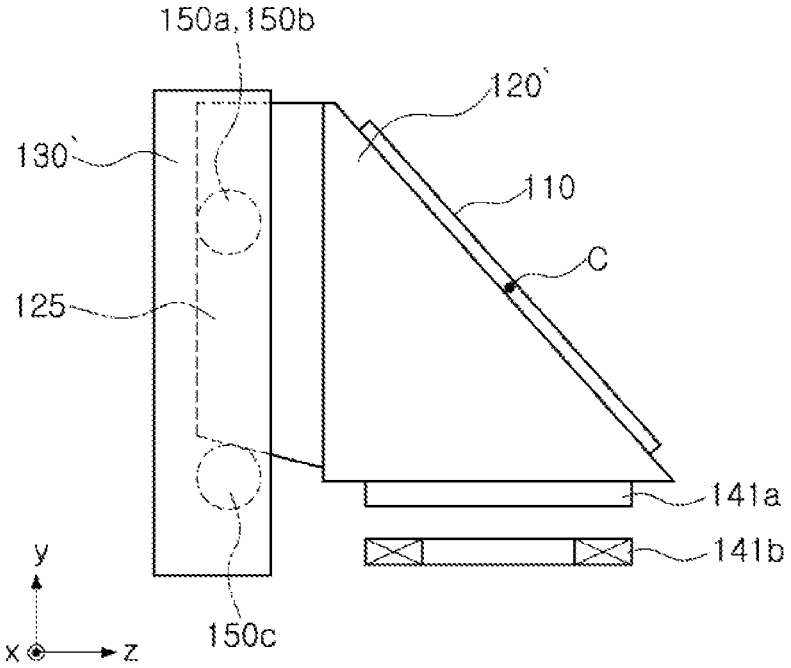

FIG. 16A

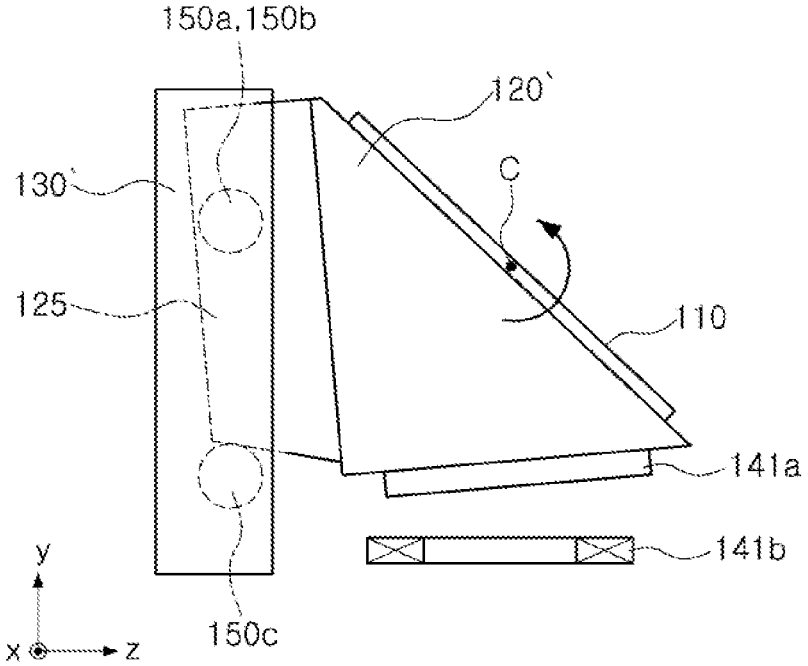

FIG. 16B

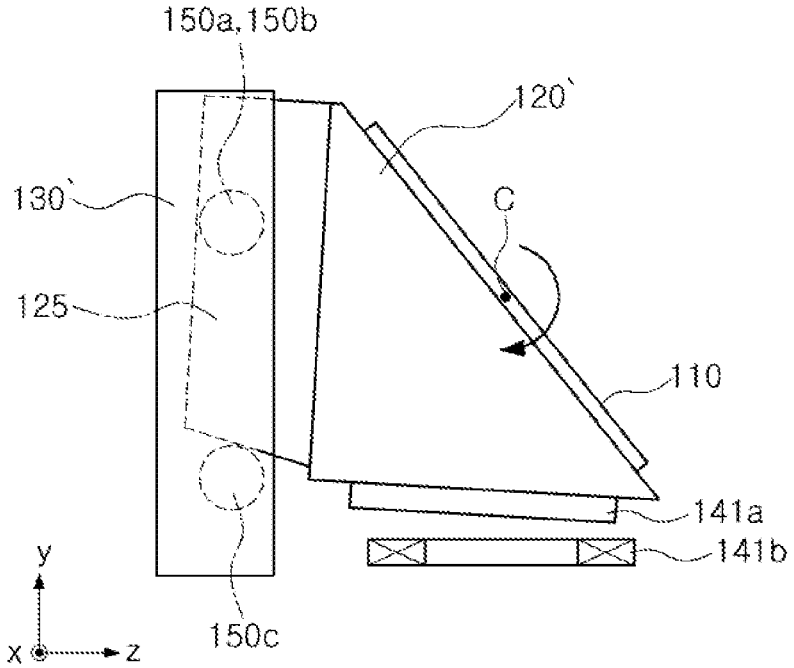

FIG. 16C

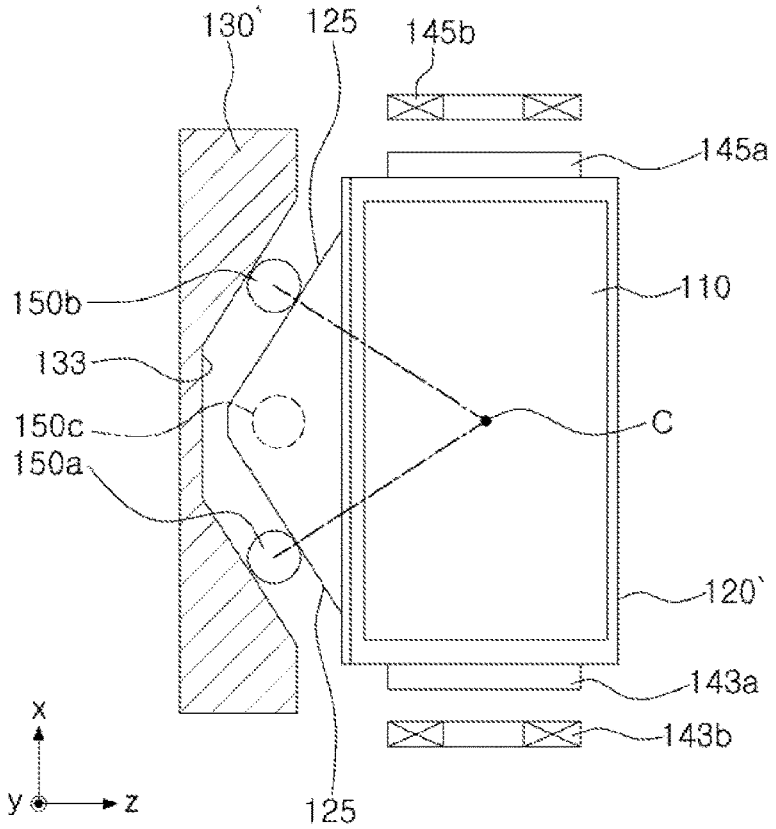

FIG. 17A

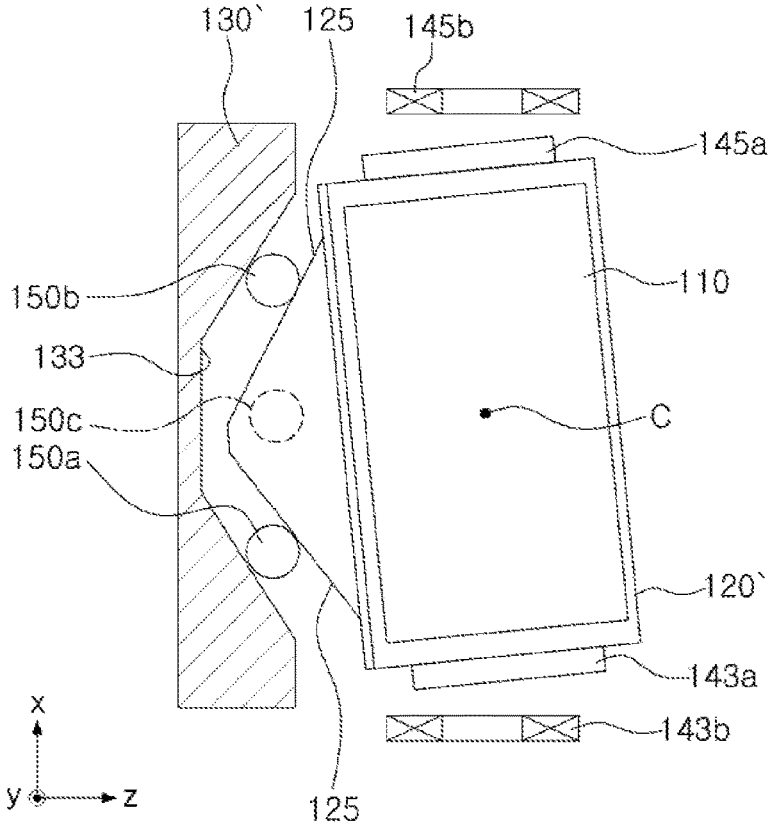

FIG. 17B

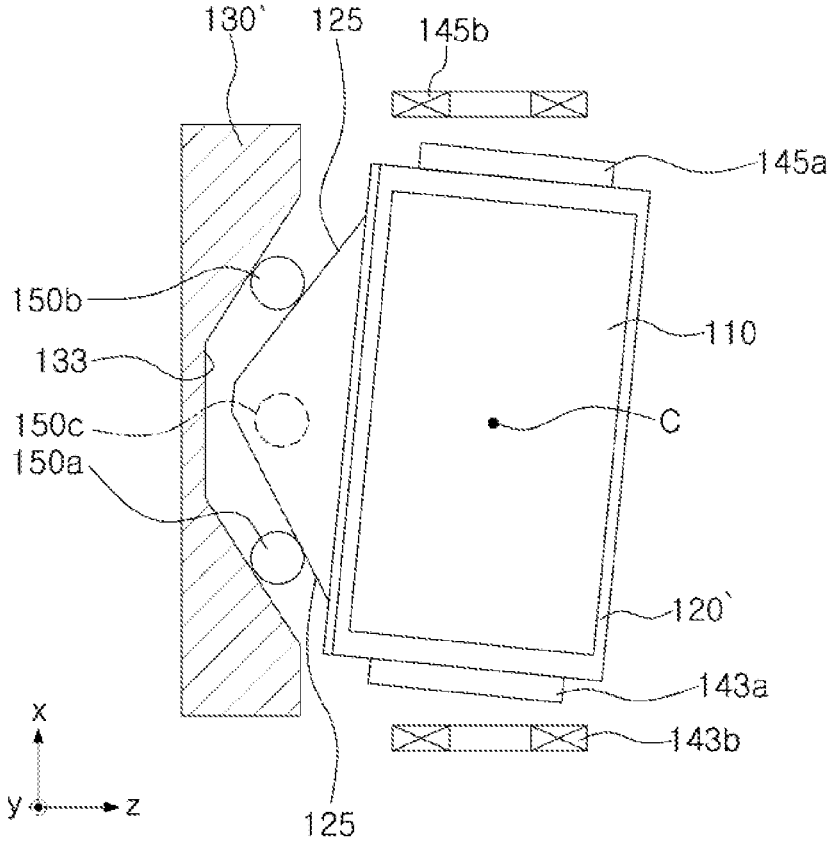

FIG. 17C

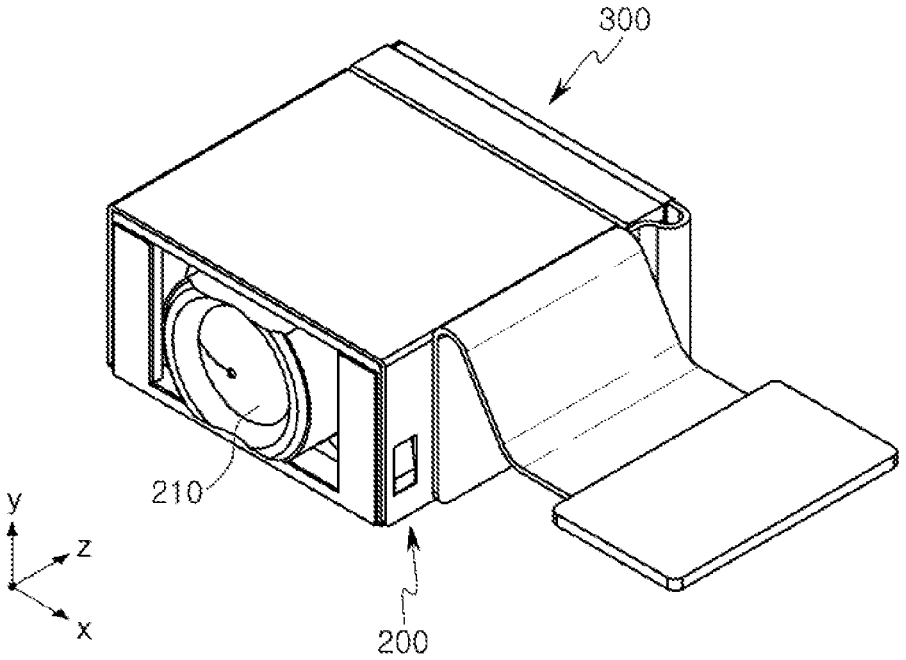

FIG. 18

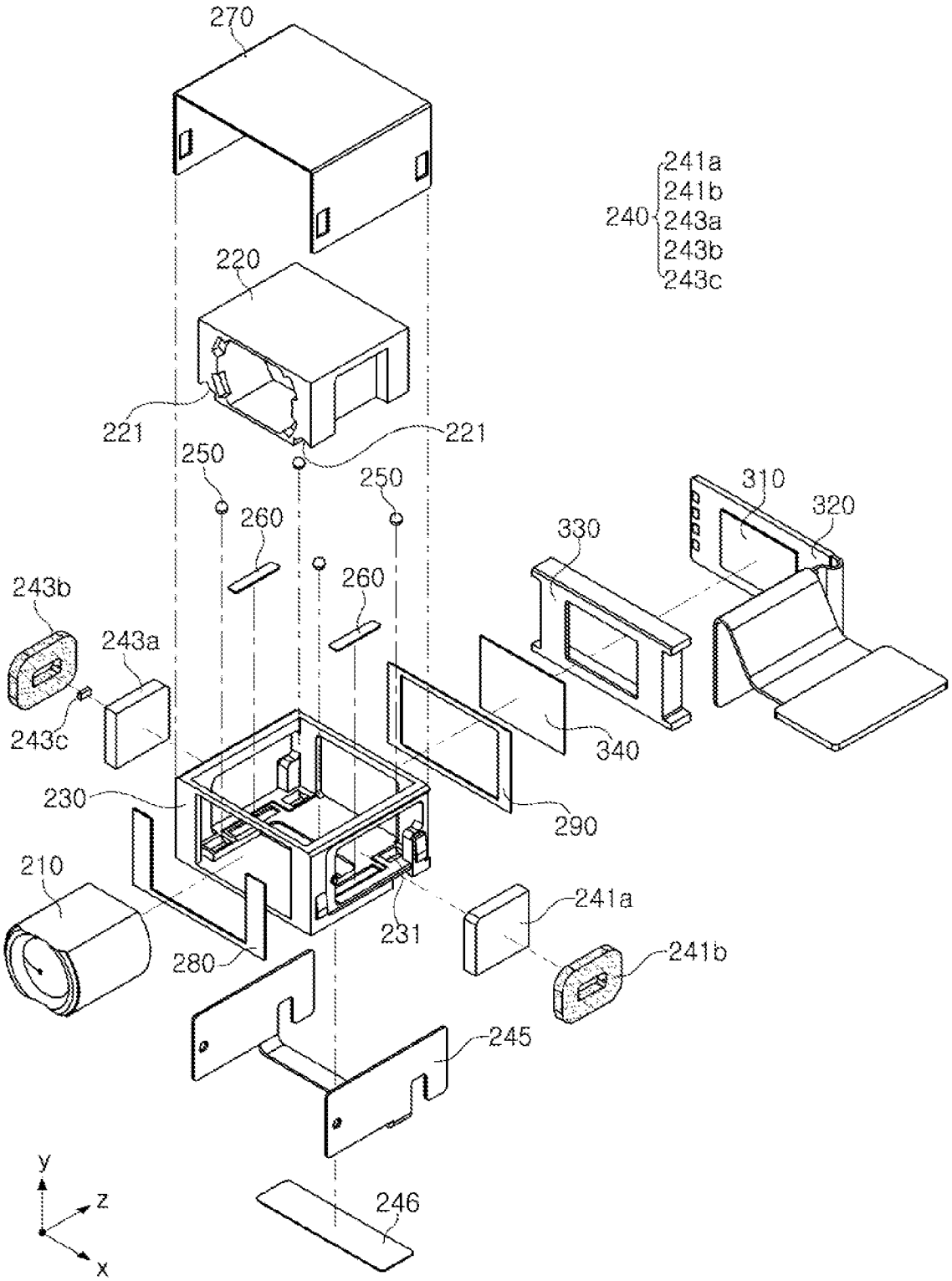
270
220
221
221
250
250
260
260
240
241a
241b
243a
243b
243c
310
320
330
340
290
243b
243a
243c
230
210
280
231
241a
241b
245
246
y
z
x

FIG. 19

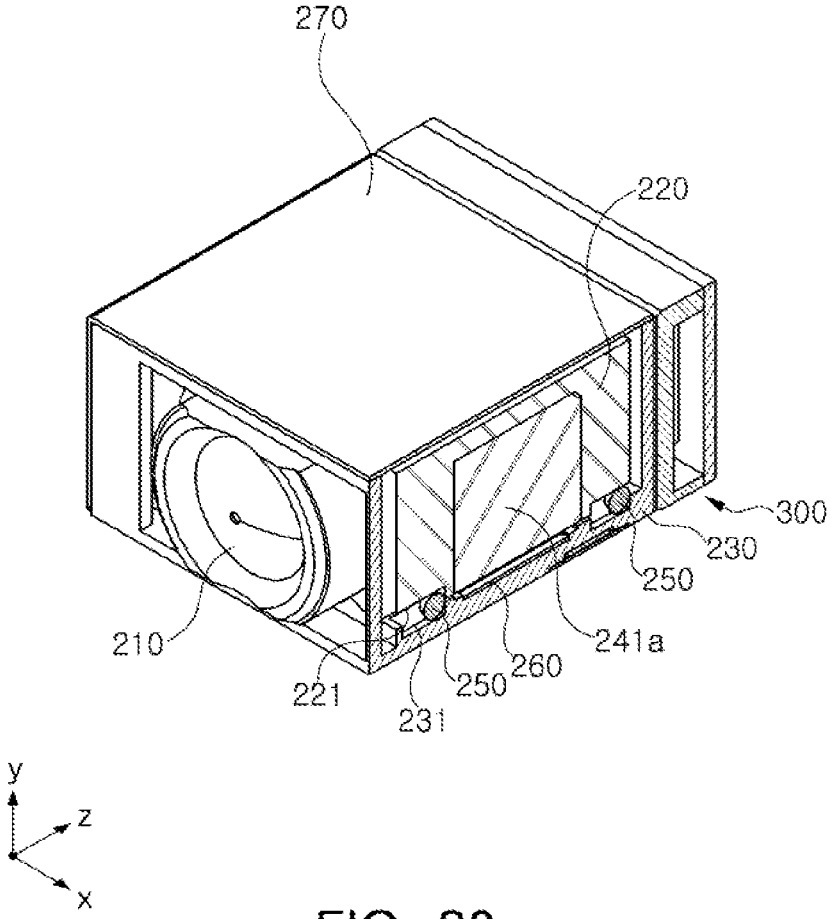

FIG. 20

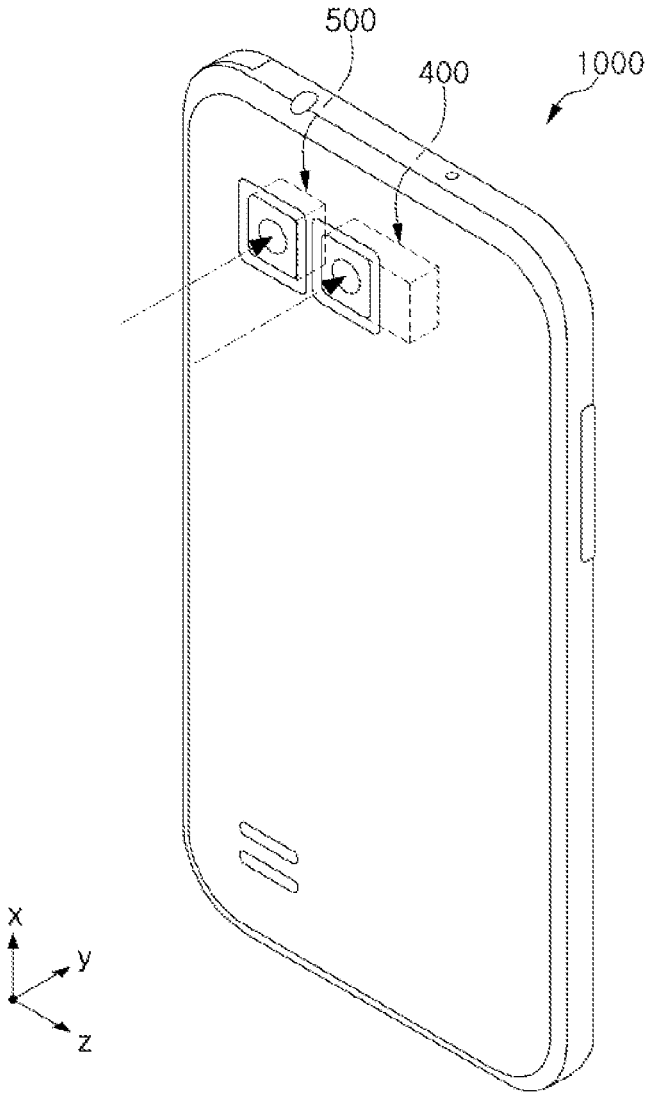

FIG. 21

CAMERA MODULE AND PORTABLE ELECTRONIC DEVICE INCLUDING THE SAME

CROSS-REFERENCE TO RELATED APPLICATIONS

This application is a continuation of U.S. patent application Ser. No. 15/667,658 filed on Aug. 3, 2017, now U.S. Pat. No. 10,516,773 issued on Dec. 24, 2019, which claims the benefit under 35 U.S.C. § 119(a) of Korean Patent Application Nos. 10-2016-0133159 filed on Oct. 13, 2016, 10-2016-0142310 filed on Oct. 28, 2016, and 10-2017-0024505 filed on Feb. 24, 2017, in the Korean Intellectual Property Office, the entire disclosures of which are incorporated herein by reference for all purposes.

BACKGROUND

1. Field

The following description relates to a camera module and a portable electronic device including the same.

2. Description of Related Art

Recently, it has been common to adopt camera modules for use in portable electronic devices, such as smartphones, tablet PCs, laptop computers, and the like. Likewise, auto focusing (AF) functions, optical image stabilization (01S) functions, and zoom functions have been added to camera modules. However, in order to implement various additional functions, the structure of camera modules becomes complicated as a consequence, and their size increases. Thus, the corresponding size of portable electronic devices, including camera modules, may also increase.

In addition, in cases in which lenses or image sensors are directly moved to correct the shaking of a user's hand, the weight of lenses or image sensors and the weight of other members, including mounted lenses or image sensors, should all be considered. Thus, more than a single, specific level of driving power is required, which in turn causes power consumption to increase.

SUMMARY

This Summary is provided to introduce a selection of concepts in a simplified form that are further described below in the Detailed Description. This Summary is not intended to identify key features or essential features of the claimed subject matter, nor is it intended to be used as an aid in determining the scope of the claimed subject matter.

In a general aspect, a camera module includes a lens module having lenses and a reflecting module disposed in front of the lens module and configured to change a path of light to direct the light toward the lens module. The reflecting module includes a holder in which a reflecting member configured to change the path of the light is mounted and includes a first housing supporting the holder. The holder is configured to slide with respect to the first housing in order to enable rotation of the reflecting member with respect to a first axis and a second axis.

The holder of the camera module may be configured to be pressed toward the first housing. The camera module may include a first yoke disposed on one surface of facing surfaces of the holder and the first housing, and a magnet disposed on the other surface, where the first yoke and the

magnet are configured to magnetically attract each other. The camera module may include a convex portion and a concave portion. The convex portion may protrude in a direction in which the holder is pressed. The convex portion may be disposed on one surface of facing surfaces of the holder and the first housing. The concave portion may be formed to be concave in the direction in which the holder is pressed and be disposed on the other surface.

The convex portion of the camera module may include support protrusions, and the concave portion of the camera module may include support grooves. The support grooves may include an inclined surface, and the support protrusions may be configured to be in point contact with the inclined surface of the support grooves. The support protrusions may be configured to slide along the inclined surface of the support grooves, thereby enabling rotation of the holder.

The convex portion of the camera module may be disposed to be spaced apart from the concave portion, with a support portion disposed between the convex portion and the concave portion. Each of the convex portion and the concave portion may include inclined surfaces, and the support portion may be disposed between respective inclined surfaces of the convex portion and inclined surfaces of the concave portion. The support portion may include ball members. A center point of the reflecting member may be formed at a meeting position at which extended lines of conceptual lines connecting a contact point of the ball members and the inclined surface of the convex portion meet with a contact point between the ball members and the inclined surface of the concave portion.

The magnets may be mounted in the holder and coils, respectively facing the magnets, may be disposed in the first housing. The lens module may further include a lens barrel having the lenses, a carrier with the lens barrel mounted inside, a second housing accommodating the carrier, and a driving portion configured to change a distance between the carrier and the reflecting module by moving the carrier.

The ball members guiding movement of the carrier may be disposed between the carrier and the second housing. The guide grooves in which the ball members are disposed may be formed on one or a combination of surfaces of facing surfaces of the carrier and the second housing. The guide grooves may be elongated in an optical axis direction of the lenses. The driving portion may include magnets mounted in the carrier and coils disposed in the second housing to face the magnets, as well as a second yoke mounted in the second housing, where the second yoke is configured to attract the magnets.

In a general aspect, a camera module includes a lens module including lenses, and a reflecting module disposed in front of the lens module. The reflecting module is configured to change a path of light to direct the light toward the lens module. The reflecting module also includes a holder and a first housing. A reflecting member configured to change the path of light is mounted on the holder. A first housing supports the holder. The holder is configured to slide with respect to the first housing, in order for the reflecting member to enable rotation with respect to a first axis and a second axis. The lens module comprises a lens barrel having the lenses and including a second housing accommodating the lens barrel. The lens barrel is configured to be pressed toward the second housing. The lens barrel is configured to slide in a direction different from a direction in which the lens barrel is pressed.

In a general aspect, a reflector is configured to direct incident light toward a lens module of an imaging component in an apparatus. The reflector includes a reflecting

member configured to change a path of incident light, a holder in which the reflecting member is disposed, and a housing supporting the holder. The holder is configured to slide with respect to the housing to rotate the reflecting member, the rotation with respect to a first axis and a second axis.

The holder may further include a protrusion and the housing may further include a recess. The protrusion and the recess may be shaped to enable the sliding configuration. The protrusion and the recess may each be circular, triangular, rectangular, or polygonal. Support bearings may be disposed between the protrusion and the recess to enable the sliding configuration.

In a general aspect, an apparatus includes an outer housing configured to house components of the apparatus; and a first camera module disposed inside the outer housing. The first camera module is configured to image light incident on the apparatus on an axis perpendicular to an axis of incidence to the outer housing. The first camera module further includes a lens module including lenses, a reflecting member configured to change a path of incident light at a 90° angle, a holder in which the reflecting member is disposed, and an inner housing supporting the holder. The holder is configured to slide with respect to the inner housing to rotate the reflecting member, the rotation with respect to a first axis and a second axis.

The axis of incidence of the apparatus may be in a thickness direction of the apparatus, while the axis perpendicular to the axis of incidence may be in a width direction or a length direction. The camera module may further include a second camera module, where the second camera module is configured to image light incident on an axis of incidence. The apparatus may be a smartphone, a tablet, a personal computer (PC), a PC monitor, a laptop computer, a virtual reality (VR) apparatus, an augmented reality (AR) apparatus, or a mixed reality (MR) apparatus.

Other features and aspects will be apparent from the following detailed description, the drawings, and the claims.

BRIEF DESCRIPTION OF THE DRAWINGS

FIG. **1** is a perspective view of a portable electronic device according to an example.

FIGS. **2**A and **2**B are perspective views of a camera module according to an example.

FIG. **3** is a schematic cross-sectional view of a camera module according to an example.

FIG. **4** is a perspective view of a reflecting module according to an example.

FIG. **5** is an exploded perspective view of the reflecting module according to an example.

FIG. **6** is a schematic cross-sectional view of the reflecting module according to an example.

FIG. **7** is a schematic top view of the reflecting module according to an example.

FIG. **8** is a perspective view of a holder of the reflecting module according to an example.

FIG. **9** is a perspective view of a first housing of the reflecting module according to an example.

FIG. **10** is a schematic perspective view illustrating a combined structure of the holder and the first housing of the reflecting module according to an example.

FIGS. **11**A to **110** are schematic views illustrating a state in which the holder of the reflecting module is rotated with respect to a first axis according to an example.

FIGS. **12**A to **12**C are schematic views illustrating a state in which the holder of the reflecting module is rotated with respect to a second axis according to an example.

FIG. **13** is a conceptual view illustrating a rotational axis of the reflecting member according to an example.

FIG. **14** is an exploded perspective view of the reflecting module according to an example.

FIGS. **15**A to **15**C are schematic perspective views illustrating a combined structure of the holder and the first housing of the reflecting module according to an example.

FIG. **16**A is a schematic side view of the reflecting module according to an example.

FIGS. **16**B to **16**C are schematic views illustrating a state in which the holder of the reflecting module is rotated with respect to a first axis according to an example.

FIG. **17**A is a schematic top view of the reflecting module according to an example.

FIGS. **17**B and **17**C are schematic views illustrating a state in which the holder of the reflecting module is rotated with respect to a second axis according to an example.

FIG. **18** is a perspective view of a lens module and an image sensor module, included in a camera module, according to an example.

FIG. **19** is an exploded perspective view of the lens module and the image sensor module, included in a camera module, according to an example.

FIG. **20** is a partially cutaway perspective view of the lens module and the image sensor module included in a camera module according to an example.

FIG. **21** is a perspective view of a portable electronic device according to an example.

Throughout the drawings and the detailed description, the same reference numerals refer to the same elements, where applicable. The drawings may not be to scale, and the relative size, proportions, and depiction of elements in the drawings may be exaggerated for clarity, illustration, or convenience.

DETAILED DESCRIPTION

The following detailed description is provided to assist the reader in gaining a comprehensive understanding of the methods, apparatuses, and/or systems described herein. However, various changes, modifications, and equivalents of the methods, apparatuses, and/or systems described herein will be apparent after an understanding of the disclosure. The sequences of operations described herein are merely examples, and are not limited to those set forth herein, but may be changed as will be apparent to one skilled in the art, with the exception of operations necessarily occurring in a certain order. Also, descriptions of functions and constructions that are well known may be omitted for increased clarity or conciseness.

The features described herein may be embodied in different forms, and are not to be construed as being limited to the examples described herein. Rather, the examples described herein have been provided so that this disclosure will be thorough and complete, and will convey the full scope of the disclosure after an understanding of the application.

Throughout the specification, it will be understood that when an element, such as a layer, region or wafer (substrate), is referred to as being "on," "connected to," or "coupled to" another element, it can be directly "on," "connected to," or "coupled to" the other element, or other elements intervening therebetween may be present. In contrast, when an element is referred to as being "directly on," "directly

connected to," or "directly coupled to" another element, there may be no elements or layers intervening therebetween. As used herein, the term "and/or" includes any and all combinations of one or more of the associated listed items.

The articles "a," "an," and "the" are intended to include the plural forms as well, unless the context clearly indicates otherwise. The terms "comprises," "includes," and "has" specify the presence of stated features, numbers, operations, members, elements, and/or combinations thereof, but do not preclude the presence or addition of one or more other features, numbers, operations, members, elements, and/or combinations thereof.

Due to manufacturing techniques and/or tolerances, variations of the shapes shown in the drawings may occur. Thus, the examples described herein are not limited to the specific shapes shown in the drawings, but include changes in shape that occur during manufacturing.

Subsequently, examples are described in further detail with reference to the accompanying drawings. Examples provide a camera module and a portable electronic device including the same, implementing a function, such as an auto focusing (AF) function, a zoom function, an optical image stabilization (01S) function, and the like, and having a relatively simple structure and a relatively small size. In addition, a camera module minimizing power consumption and a portable electronic device including the same are provided.

FIG. **1** is a perspective view of a portable electronic device according to an example. With reference to FIG. **1**, a portable electronic device **1000** according to an example is provided as a portable electronic device, such as a mobile communications terminal, a smartphone, a tablet PC, or the like. As illustrated in FIG. **1**, the portable electronic device **1000** includes a camera module **400** mounted therein, in order to image a subject. The camera module **400** includes a plurality of lenses.

In the example, the camera module **400** is configured to allow an optical axis (a Z axis) of the plurality of lenses to be disposed in a direction perpendicular to a thickness direction (a Y-axis direction, a direction from a front surface of a portable electronic device toward a rear surface thereof or the opposite direction) of the portable electronic device **1000**. For example, the optical axis (the Z axis) of the plurality of lenses may be formed in a width direction or in a length direction of the portable electronic device **1000**. Thus, even in cases where the camera module **400** includes a function, such as an AF function, a zoom function, or an OIS function, a thickness of the portable electronic device **1000** does not increase. Accordingly, the portable electronic device **1000** may be miniaturized.

The camera module **400** according to an example includes at least one among the AF function, the zoom function, and the OIS function. Thus, there is a limitation in miniaturizing the portable electronic device **1000**. In more detail, in order to implement the zoom function, a length of a lens group of the camera module is relatively long. However, in a case in which an optical axis (the Z axis) of the lens group is formed in the thickness direction of a portable electronic device, the thickness of the portable electronic device also increases according to the length of the lens group. In a case in which the thickness of the portable electronic device is not increased, the length of the lens group is not sufficiently long, thereby degrading the zoom function.

In addition, in order to implement the AF function and the OIS function, an actuator is disposed to move the lens group in an optical axis direction or in a direction perpendicular to the optical axis. However, in a case in which the optical axis (the Z axis) of the lens group is formed in the thickness direction of the portable electronic device, the actuator to move the lens group is also disposed in the thickness direction of the portable electronic device. Thus, the thickness of the portable electronic device is increased. However, because the optical axis (the Z axis) of the plurality of lenses in camera module **400** is disposed in a direction perpendicular to the thickness direction of the portable electronic device **1000**, the portable electronic device **1000** including additional functions may be miniaturized.

FIGS. **2**A and **2**B are perspective views of a camera module according to an example, while FIG. **3** is a schematic cross-sectional view of a camera module according to an example. With reference to FIGS. **2**A, **2**B, and **3**, a camera module **400** according to an example includes a reflecting module **100**, a lens module **200**, and an image sensor module **300**.

The reflecting module **100** is configured to change a direction of light emissions. For example, in the case of light incident through an opening (see **171** of FIG. **3**) of the reflecting module **100**, an emission direction thereof is changed to be toward the lens module **200** by the reflecting module **100**. To this end, the reflecting module **100** includes a reflecting member **110** reflecting light. By the reflecting member **110**, a path of light incident on the reflecting module **100** may be changed. Thus, the emission direction of the light incident through the opening **171** is changed to be directed toward the lens module **200** by the reflecting module **100**. For example, the direction of light emissions is changed to be the same as the optical axis (the Z axis) direction by the reflecting module **100**.

The lens module **200** includes a plurality of lenses through which the light travels, where the emission direction of the light has been changed by the reflecting module **100**. The image sensor module **300** includes an image sensor **310** and a printed circuit board **320**, in order to convert light having travelled through the plurality of lenses into an electrical signal.

A first joining member (see **280** of FIG. **19**) is interposed between the reflecting module **100** and the lens module **200**. The reflecting module **100** and the lens module **200** are combined by the first joining member **280**. In addition, a second joining member (see **290** of FIG. **19**) is interposed between the lens module **200** and the image sensor module **300**. The lens module **200** and the image sensor module **300** are combined by the second joining member **290**.

FIG. **4** is a perspective view of a reflecting module according to an example, while FIG. **5** is an exploded perspective view of the reflecting module according to an example. FIG. **6** is a schematic cross-sectional view of the reflecting module according to an example, while FIG. **7** is a schematic top view of the reflecting module according to an example. With reference to FIGS. **4** to **7**, a reflecting module **100** includes a reflecting member **110**, a holder **120** including the reflecting member **110** mounted therein, a first housing **130** supporting the holder **120**, a cover **170**, and a first driving portion **140** moving the holder **120**.

The reflecting member **110** is configured to change a direction of light emissions. In more detail, the reflecting member **110** is provided as a mirror or a prism reflecting light. The reflecting member **110** is fixed to the holder **120**. The holder **120** includes a mounting surface (see **123** of FIG. **6**) on which the reflecting member **110** is mounted. The mounting surface **123** of the holder **120** may be provided as an inclined surface. For example, the mounting surface **123** is provided as an inclined surface tilted at an angle of 45° to an optical axis (a Z axis) of a plurality of lenses.

The holder **120** including the reflecting member **110** mounted therein is accommodated in the first housing **130**, in order to be moved therein. In more detail, the holder **120** is free to rotate with respect to a first axis (an X axis) and a second axis (a Y axis), in the first housing **130**. Thus, the reflecting member **110** mounted in the holder **120** is also free to rotate, with respect to the first axis (the X axis) and the second axis (the Y axis). The holder **120** is configured to move with respect to the first housing **130** so that the reflecting member **110** may be rotated, with respect to the first axis (the X axis) and the second axis (the Y axis).

In an embodiment, the first axis (the X axis) and the second axis (the Y axis) refer to axes perpendicular to the optical axis (the Z axis). The first axis (the X axis) and the second axis (the Y axis) may refer to axes perpendicular to each other. In the example, the holder **120** including the reflecting member **110** is configured to be moved when an image or video footage is captured, in order to correct blurriness of an image or shakiness of video footage caused by factors, such as user-introduced shaking.

In more detail, in a case in which movement occurs because of shaking by a user's hand, when an image or video footage is captured, movement is compensated for by providing relative displacement corresponding to the movement to the holder **120**. In other words, in the example, in order to implement the OIS function, the plurality of lenses or an image sensor **310** is not directly moved. Instead, the holder **120** including the reflecting member **110** mounted therein is moved, changing the direction of light emissions. Because the holder **120**, which is relatively light, is moved to implement the OIS function, power consumption may be minimized.

The driving portion **140** generates driving power so that the holder **120** may be rotated, with respect to two axes. In further detail, the first driving portion **140** includes magnets **141***a*, **143***a*, and **145***a*, and coils **141***b*, **143***b*, and **145***b*, disposed to face magnets **141***a*, **143***a*, and **145***a*. In a case in which power is applied to coils **141***b*, **143***b*, and **145***b*, the holder **120** including magnets **141***a*, **143***a*, and **145***a* mounted therein may be rotated with respect to the first axis (the X axis) and the second axis (the Y axis). The rotation is performed as a result of electromagnetic force between the magnets **141***a*, **143***a*, and **145***a*, and the coils **141***b*, **143***b*, and **145***b*.

The magnets **141***a*, **143***a*, and **145***a* are mounted in the holder **120**. For example, a magnet **141***a* among the magnets **141***a*, **143***a*, and **145***a* is mounted on a lower surface of the holder **120**, while the other magnets **143***a* and **145***a* are mounted on a side surface of the holder **120**. The plurality of coils **141***b*, **143***b*, and **145***b* are mounted in the first housing **130**. For example, the coils **141***b*, **143***b*, and **145***b* are mounted in the first housing **130** by a medium of an OIS substrate **161**. The coils **141***b*, **143***b*, and **145***b* are disposed in the OIS substrate **161**, while the OIS substrate **161** is mounted in the first housing **130**.

A reinforced plate **167** is mounted below the OIS substrate **161** to reinforce strength of the OIS substrate **161**. In the example, a closed loop control method used to detect a position of the holder **120** and provide notice of the position is used, when the holder **120** is rotated. Thus, position sensors **141***c* and **143***c* control a closed loop. The position sensors **141***c* and **143***c* are provided as a hall sensor. The position sensors **141***c* and **143***c* are disposed on an internal side or an external side of each of coils **141***b* and **143***b*. The position sensors **141***c* and **143***c* may be mounted on the OIS substrate **161** including each of the coils **141***b* and **143***b*.

Also as shown in FIG. **5**, a gyro sensor **165** is disposed on the OIS substrate **161**. The gyro sensor **165** is used for detecting instances of shakiness, such as shaking by a user's hand. A driver integrated circuit (IC) **163** providing a driving signal to the plurality of coils **141***b*, **143***b*, and **145***b* is also disposed on the OIS substrate **161**.

FIG. **8** is a perspective view of a holder of the reflecting module according to an example, FIG. **9** is a perspective view of a first housing of the reflecting module according to an example, and FIG. **10** is a schematic perspective view illustrating a combined structure of the holder and the first housing of the reflecting module according to an example. In addition, FIGS. **11**A to **110** are schematic views illustrating a state in which the holder of the reflecting module is rotated with respect to a first axis according to an example, while FIGS. **12**A to **12**C are schematic views illustrating a state in which the holder of the reflecting module is rotated with respect to a second axis according to an example.

A holder **120** is supported by a first housing **130**. As a support structure, a convex portion and a concave portion are disposed on facing surfaces of the holder **120** and the first housing **130**. For example, the holder **120** includes support protrusions **121** as a convex portion, while the first housing **130** includes support grooves **131** in contact with the support protrusions **121** as a concave portion. Positions of the support protrusions **121** and the support grooves **131** may be interchangeable.

Each of the support protrusions **121** may have a ball shape or a hemispherical shape. In the example, three support protrusions are disposed to have a triangular shape, but the example is not limited thereto. In the case of a structure in which the holder **120** may be rotated, with respect to two axes, the number of support protrusions or the form of those protrusions may be changed.

Each of the support grooves **131** includes an inclined surface, while the support protrusions **121** are in contact with the inclined surface disposed in the support grooves **131**. For example, the plurality of support protrusions **121** are configured to be in point contact with the inclined surface disposed in the support grooves **131**.

In an embodiment, in order to maintain a state of contact between the support grooves **131** and the support protrusions **121**, the holder **120** is pressed toward the first housing **130**. The support grooves **131** are formed to be concave in a direction in which the holder **120** is pressed. The support protrusions **121** are formed to be convex in the direction in which the holder **120** is pressed.

On facing surfaces of the holder **120** and the first housing **130**, a first yoke **153** and a magnet **151**, which are magnetically attracted to each other, are disposed. For example, the magnet **151** is mounted on a surface in which the support protrusions **121** are formed, among surfaces of the holder **120** (see magnet **151** of FIG. **5**). The first yoke **153** is mounted on a surface in which the support grooves **131** are formed, among surfaces of the first housing **130** (see yoke **153** of FIG. **5**).

The first yoke **153** is provided as a magnetic material, while mounting positions of the magnet **151** and the first yoke **153** may be interchangeable. In a different example, the magnet **151** may also be mounted in an entirety of the holder **120** and the first housing **130**. The first yoke **153** and the magnet **151** are magnetically attractive. Thus, the holder **120** may be rotated, with respect to the first axis (an X axis) and/or the second axis (a Y axis) by driving power of a first driving portion **140** while the holder **120** is in contact with the first housing **130**.

With reference to FIGS. **11**A to **11**C, in a case in which driving power is generated in a direction of the second axis (the Y axis), the holder **120** is rotated with respect to the first axis (the X axis). In this case, the support protrusions **121** are configured to slide along the inclined surface disposed in the support grooves **131** while the support protrusions **121** are in contact with the support grooves **131**.

In a case in which power is not applied to coils **141***b*, **143***b*, and **145***b* of the first driving portion **140**, the holder **120** is disposed in a reference position (e.g., a state in which a mounting surface **123** of the holder **120** is tilted at an angle of about 45° to an optical axis (a Z axis) of the lenses). This position results from the magnetic attraction between the first yoke **153** and the magnet **151** (see FIG. **11**A).

In a case in which instances of shaking occurs, such as the shaking of a user's hand, the holder **120** may be rotated, with respect to the first axis (the X axis) to correct movement as illustrated in FIGS. **11**B and **11**C. In an embodiment, driving power is generated in the direction of the second axis (the Y axis) in cases in which power is applied to a coil **141***b* disposed to face a magnet **141***a* mounted on a lower surface of the holder **120** among the coils **141***b*, **143***b*, and **145***b* of the first driving portion **140**. As a result, the holder **120** is rotated with respect to the first axis (the X axis).

In this case, the support protrusions **121** are configured to slide while the support protrusions **121** are in contact with the support grooves **131**. In a case in which the holder **120** is rotated counterclockwise (see FIG. **11**B) or clockwise (see FIG. **11**C) with respect to the first axis (the X axis), the plurality of support protrusions **121** are configured to slide along the inclined surface disposed in the plurality of support grooves **131**.

With reference to FIGS. **12**A to **12**C, in a case in which driving power is generated in a direction of the first axis (the X axis), the holder **120** is rotated with respect to the second axis (the Y axis). In this case, the support protrusions **121** are configured to slide along the inclined surface disposed in the support grooves **131** while the support protrusions **121** are in contact with the support grooves **131**.

In a case in which power is not applied to coils **141***b*, **143***b*, and **145***b* of the first driving portion **140**, the holder **120** is disposed in the reference position (e.g., a state in which the mounting surface **123** of the holder **120** is tilted at an angle of about 45° to the optical axis (the Z axis) of the plurality of lenses). This is a result of the magnetic attraction between the first yoke **153** and the magnet **151** (see FIG. **12**A).

In a case in which shaking of a user's hand occurs, the holder **120** may be rotated with respect to the second axis (the Y axis) to correct movement as illustrated in FIGS. **12**B and **12**C. In an embodiment, in cases in which power is applied to coils **143***b* and **145***b* disposed to face magnets **143***a* and **145***a* mounted on a side surface of the holder **120** among the plurality of coils **141***b*, **143***b*, and **145***b* of the first driving portion **140**, driving power is generated in the direction of the first axis (the X axis). Accordingly, the holder **120** is rotated with respect to the second axis (the Y axis).

In this case, the support protrusions **121** are configured to slide while the support protrusions **121** are in contact with the support grooves **131**. In a case in which the holder **120** is rotated counterclockwise (see FIG. **12**B) or clockwise (see FIG. **12**C) with respect to the second axis (the Y axis), the support protrusions **121** are configured to slide along the inclined surface disposed in the support grooves **131**. In order to reduce friction between the support protrusions **121** and the support grooves **131**, a lubricant may be provided between the support protrusions **121** and the support grooves **131**.

FIG. **13** is a conceptual view illustrating a rotational axis of the reflecting member according to an example. FIG. **13** illustrates a form in which positions of support protrusions **121** and support grooves **131** described above are changed inversely for the sake of convenience of explanation. FIG. **13** schematically illustrates forms of a holder **120**, a first housing **130**, and a reflecting member **110**. With reference to FIG. **13**, in a reflecting module **100** according to an example, a center point C of the reflecting member **110** may be provided as a rotational axis. Thus, because the reflecting member **110** is rotated with respect to the center point C of the reflecting member **110**, the center point C of the reflecting member **110** is configured not to be moved when the reflecting member **110** is rotated with respect to a first axis (an X axis) and/or a second axis (a Y axis).

In a case in which the center point C of the reflecting member **110** does not match the rotational axis, the reflecting member **110** is rotated with respect to the rotational axis. Thus, whenever the reflecting member **110** is rotated, the center point C of the reflecting member **110** is also moved. In other words, an amount of movement of the reflecting member **110** is increased, thereby causing a limitation in reducing a total size of the reflecting module **100** including the reflecting member **110** mounted therein.

However, in the example, because the center point C of the reflecting member **110** is provided as the rotational axis, the center point C of the reflecting member **110** is not moved when the reflecting member **110** is rotated. Thus, the total size of the reflecting module **100** including the reflecting member **110** mounted therein may be minimized.

FIG. **14** is an exploded perspective view of the reflecting module according to an example. With reference to FIG. **14**, a reflecting module **100** includes a reflecting member **110**, a holder **120'** including the reflecting member **110** mounted therein, a first housing **130'** supporting the holder **120'**, and a first driving portion **140** generating driving power to move the holder **120'**.

The reflecting member **110** is configured to change a direction of light emissions. For example, the reflecting member **110** is provided as a mirror or a prism reflecting light. The reflecting member **110** is fixed to the holder **120'**. The holder **120'** includes a mounting surface **129** on which the reflecting member **110** is mounted. The mounting surface **129** of the holder **120'** may include an inclined surface. For example, the mounting surface **129** is an inclined surface tilted at an angle of about 45° to an optical axis (a Z axis) of a plurality of lenses.

The holder **120'** including the reflecting member **110** mounted therein is accommodated in the first housing **130'**, in order to move therein. For example, the holder **120'** may be rotated with respect to a first axis (an X axis) and a second axis (a Y axis) in the first housing **130'**. Here, the first axis (the X axis) and the second axis (the Y axis) may refer to an axis perpendicular to the optical axis (the Z axis). The first axis (the X axis) and the second axis (the Y axis) may refer to axes perpendicular to each other.

In the example, in order to correct blurriness of an image or shakiness of video footage caused by the shaking of a user's hand or the like, the holder **120'** including the reflecting member **110** mounted therein is configured to be moved when an image or video footage is captured. In more detail, in a case in which a user's hand shakes, movement is compensated for by providing relative displacement corresponding to the movement of the holder **120'** when an image

or video footage is taken. In other words, in order to implement the OIS function in the example, the plurality of lenses or an image sensor **310** is not directly moved, but the holder **120'** (including the reflecting member **110** mounted therein) is moved, changing the direction of light emissions. Thus, because the holder **120'** that is relatively light in weight may be moved to implement the OIS function, power consumption may be minimized.

The driving portion **140** generates driving power so that the holder **120'** may be rotated with respect to two axes. In further detail, the first driving portion **140** includes magnets **141***a*, **143***a*, and **145***a*, and coils **141***b*, **143***b*, and **145***b*, disposed to face the plurality of magnets **141***a*, **143***a*, and **145***a*. In a case in which power is applied to coils **141***b*, **143***b*, and **145***b*, the holder **120'** (including the plurality of magnets **141***a*, **143***a*, and **145***a* mounted therein) may be rotated with respect to the first axis (the X axis) and the second axis (the Y axis). The rotation is enabled by electromagnetic force between the magnets **141***a*, **143***a*, and **145***a*, and the coils **141***b*, **143***b*, and **145***b*.

The magnets **141***a*, **143***a*, and **145***a* are mounted in the holder **120'**. For example, a magnet **141***a* among the magnets **141***a*, **143***a*, and **145***a* is mounted on a lower surface of the holder **120'**, while the other magnets **143***a* and **145***a* are mounted on a side surface of the holder **120'**. The coils **141***b*, **143***b*, and **145***b* are mounted in the first housing **130'**. For example, the plurality of coils **141***b*, **143***b*, and **145***b* are mounted in the first housing **130'** by a medium of an OIS substrate **161**. The coils **141***b*, **143***b*, and **145***b* are mounted in the OIS substrate **161**, while the OIS substrate **161** is mounted in the first housing **130'**.

A reinforced plate **167** is mounted below the OIS substrate **161** to reinforce strength of the OIS substrate **161**. In the example, a closed loop control method is performed to detect a position of the holder **120'** and provide notice of the position, when the holder **120'** is rotated. Thus, position sensors **141***c* and **143***c* control a closed loop. The position sensors **141***c* and **143***c* are provided as a hall sensor. The position sensors **141***c* and **143***c* are disposed on an internal side or an external side of each of coils **141***b* and **143***b*. The position sensors **141***c* and **143***c* are mounted on the OIS substrate **161**, including each of the coils **141***b* and **143***b* mounted therein.

A gyro sensor **165** is disposed in the OIS substrate **161**, which is configured to detect instances of shaking, such as shaking of a user's hand. A driver integrated circuit (IC) **163** providing a driving signal to the coils **141***b*, **143***b*, and **145***b* may also be disposed in the OIS substrate **161**.

FIGS. **15**A to **15**C are schematic perspective views illustrating a combined structure of a holder and a first housing of a reflecting module according to an example. With reference to FIGS. **15**A to **15**C, a holder **120'** is accommodated in a first housing **130'** and may be rotated. A convex portion **123'** is disposed on a surface **121'** of the holder **120'** facing a surface **131'** of the first housing **130'**, while a concave portion **133** is disposed on a surface **131'** of the first housing **130'**. Conversely, a concave portion is disposed on the surface **121'** of the holder **120'**, while a convex portion is disposed on the surface **131'** of the first housing **130'**.

In this case, the convex portion **123'** and the concave portion **133** may be formed to have a polygonal shape or a circular shape. In examples, the convex portion **123'** and the concave portion **133** are formed to have a triangular shape (FIG. **15**A), a rectangular shape (FIG. **15**B), or a circular shape (FIG. **15**C), but are not limited thereto. In a case in which the convex portion **123'** and the concave portion **133** have a structure in which the holder **120'** may be rotated with respect to a second axis, forms of the convex portion **123'** and the concave portion **133** may be changed.

A portion of the convex portion **123'** of the holder **120'** is configured to be inserted into the concave portion **133** of the first housing **130'**. The convex portion **123'** and the concave portion **133** are disposed to be spaced apart from each other. In other words, the convex portion **123'** and the concave portion **133** are configured to be in a state of non-contact with each other.

In an embodiment, in order to allow the convex portion **123'** and the concave portion **133** to be in a state of non-contact with each other, a support portion **150** is disposed between the convex portion **123'** and the concave portion **133**. The support portion **150** may include ball members **150***a*, **150***b*, and **150***c* (**150***a*, **150***b*, **150***c*, and **150***d* in an example of FIG. **15**B). The ball members **150***a*, **150***b*, and **150***c* may have a ball shape or a hemispherical shape.

The convex portion **123'** and the concave portion **133** include inclined surfaces **125** and **135**. While a portion of the convex portion **123'** is inserted into the concave portion **133**, an inclined surface **125** of the convex portion **123'** is disposed to be parallel with an inclined surface **135** of the concave portion **133**.

The support portion **150** is interposed between the inclined surface **125** of the convex portion **123'** and the inclined surface **135** of the concave portion **133**. The support portion **150** is in contact with each of the inclined surface **125** of the convex portion **123'** and the inclined surface **135** of the concave portion **133**.

In further detail, side surfaces of the convex portion **123'** and the concave portion **133** include inclined surfaces **125** and **135**, while the support portion **150** is disposed to be fixed to the inclined surfaces **125** and **135** of the convex portion **123'** and the concave portion **133**. Thus, in a case in which a portion of the convex portion **123'** of the holder **120'** is inserted into the concave portion **133** of the first housing **130'**, the support portion **150** is in contact with each of the inclined surface **125** of the convex portion **123'** and the inclined surface **135** of the concave portion **133**. The convex portion **123'** and the concave portion **133** are in a state of non-contact with each other due to the support portion **150**.

In order to maintain a state in which the support portion **150** is in contact with each of the inclined surface **125** of the convex portion **123'** and the inclined surface **135** of the concave portion **133**, the holder **120'** is pressed toward the first housing **130'**. To this end, a magnet **127** is mounted on the convex portion **123'** of the holder **120'**, while a first yoke **137** is mounted on the concave portion **133** of the first housing **130'**.

The first yoke **137** may be formed of a magnetic material, while mounting positions of the magnet **127** and the first yoke **137** may be interchangeable. In a different example, the magnet **127** is also mounted in an entirety of the convex portion **123'** and the concave portion **133**.

There is a magnetic attraction between the first yoke **137** and the magnet **127**. Thus, the support portion **150** maintains a state in which the support portion **150** is in contact with each of the inclined surface **125** of the convex portion **123'** and the inclined surface **135** of the concave portion **133**. The holder **120'** may be rotated with respect to a first axis (an X axis) and/or a second axis (a Y axis) in the first housing **130'** by driving power of a first driving portion **140** while the holder **120'** is supported by the support portion **150**.

FIG. **16**A is a schematic side view of a reflecting module according to an example, while FIGS. **16**B to **16**C are schematic views illustrating a state in which the holder of the reflecting module is rotated with respect to a first axis

according to an example. In addition, FIG. **17**A is a schematic top view of the reflecting module according to an example, while FIGS. **17**B and **17**C are schematic views illustrating a state in which the holder of the reflecting module is rotated with respect to a second axis according to examples. With reference to FIGS. **16**A to **16**C, a state in which a holder **120'** of a reflecting module **100** according to an example is rotated with respect to a first axis (an X axis) will be described.

In a case in which power is not applied to coils **141***b*, **143***b*, and **145***b* of a first driving portion **140**, the holder **120'** may be disposed in a reference position (e.g., a state in which a mounting surface **129** of the holder **120'** is inclined at an angle of about 45° to an optical axis (a Z axis) of a plurality of lenses). This is a result of magnetic attraction between a first yoke **137** disposed in a concave portion **133** and a magnet **127** disposed in a convex portion **123'** (see FIG. **16**A). In a case of shaking, the holder **120'** may be rotated with respect to the first axis (the X axis) to correct movement as illustrated in FIGS. **16**B and **16**C.

In further detail, in a case in which power is applied to a coil **141***b* disposed to face a magnet **141***a* mounted on a lower surface of the holder **120'** among the plurality of coils **141***b*, **143***b*, and **145***b* of the first driving portion **140**, driving power is generated in the direction of the second axis (the Y axis). Thus, the holder **120'** is rotated with respect to the first axis (the X axis). In this case, an inclined surface **125** of the convex portion **123'** is configured to slide while a support portion **150** is in contact therewith. In a case in which the holder **120'** is rotated counterclockwise (see FIG. **16**B) or clockwise (see FIG. **16**C) with respect to the first axis (the X axis), the inclined surface **125** of the convex portion **123'** slides along a surface of the support portion **150**.

Subsequently, with reference to FIGS. **17**A to **17**C, a state is described in which the holder **120'** of the reflecting module **100** according to an example is rotated with respect to the second axis (the Y axis). In a case in which power is not applied to coils **141***b*, **143***b*, and **145***b* of the first driving portion **140**, the holder **120'** is disposed in the reference position (e.g., a state in which the mounting surface **129** of the holder **120'** is inclined at an angle of about 45° to the optical axis (the Z axis) of the plurality of lenses). This is a result of magnetic attraction between the first yoke **137** disposed in the concave portion **133** and the magnet **127** disposed in the convex portion **123'** (see FIG. **17**A).

In a case in which shaking occurs (e.g., due to shaking of a user's hand), the holder **120'** may be rotated with respect to the second axis (the Y axis) to correct movement as illustrated in FIGS. **17**B and **17**C. In more detail, in a case in which power is applied to coils **143***b* and **145***b* disposed to face magnets **143***a* and **145***a* mounted on a side surface of the holder **120'** among the plurality of coils **141***b*, **143***b*, and **145***b* of the first driving portion **140**, driving power is generated in the direction of the first axis (the X axis). As a result, the holder **120'** is rotated with respect to the second axis (the Y axis). In this case, the inclined surface **125** of the convex portion **123'** is configured to slide while the support portion **150** is in contact therewith.

In a case in which the holder **120'** is rotated counterclockwise (see FIG. **17**B) or clockwise (see FIG. **17**C) with respect to the second axis (the Y axis), the inclined surface **125** of the convex portion **123'** is configured to slide along the surface of the support portion **150**. In order to reduce frictional force between the inclined surface **125** of the convex portion **123'** and the support portion **150**, a lubricant is provided between the inclined surface **125** of the convex portion **123'** and the support portion **150**.

In the same manner as the example described with reference to FIG. **13**, in another example, a center point C of a reflecting member **110** may be provided as a rotational axis. Thus, because the reflecting member **110** is rotated with respect to the center point C of the reflecting member **110**, the center point C of the reflecting member **110** is configured not to be moved when the reflecting member **110** is rotated with respect to the first axis (the X axis) and/or the second axis (the Y axis).

With reference to FIG. **17**A, the center point C of the reflecting member **110** provided as the rotational axis is formed in a meeting position in which extended lines of conceptual lines connecting a contact point between a plurality of ball members **150***a*, **150***b*, and **150***c* and the inclined surface **125** of the convex portion **123'** meet a contact point between the plurality of ball members **150***a*, **150***b*, and **150***c* and the inclined surface **135** of the concave portion **133**.

In a case in which the center point C of the reflecting member **110** does not match the rotational axis, the reflecting member **110** is rotated with respect to the rotational axis, rather than with respect to the center point C of the reflecting member **110**. Thus, whenever the reflecting member **110** is rotated, the center point C of the reflecting member **110** is also moved. In other words, an amount of movement of the reflecting member **110** is increased, thereby causing a limitation in reducing a total size of the reflecting module **100** including the reflecting member **110** mounted therein.

However, in the example, because the center point C of the reflecting member **110** is provided as the rotational axis, the center point C of the reflecting member **110** is not moved when the reflecting member **110** is rotated. Thus, the total size of the reflecting module **100** including the reflecting member **110** mounted therein may be minimized.

FIG. **18** is a perspective view of a lens module and an image sensor module, included in a camera module according to an example, while FIG. **19** is an exploded perspective view of the lens module and the image sensor module, included in the camera module according to an example. In addition, FIG. **20** is a partially cutaway perspective view of the lens module and the image sensor module included in the camera module according to an example. With reference to FIGS. **18** to **20**, a lens module **200** includes a lens barrel **210** including lenses, a carrier **220** including the lens barrel **210** mounted therein, a second housing **230** accommodating the lens barrel **210** and the carrier **220**, a cover **270**, and a second driving portion **240** moving the carrier **220**.

An image sensor module **300** includes an image sensor **310**. A printed circuit board **320** including the image sensor **310** is mounted in the sensor module **300**. The image sensor module **300** also includes a sensor housing **330** in which a window is formed to allow light to be received in the image sensor **310** and on which the printed circuit board **320** is mounted. The image sensor module **300** further includes an infrared light cut off filter **340** mounted in the sensor housing **330**.

The lens barrel **210** accommodates the plurality of lenses capturing a subject. The lenses are mounted in the lens barrel **210** in a direction of an optical axis. An external shape of the lens barrel **210** may generally have a cylindrical shape, while a surface of a cylinder and an opposing surface thereof may have a planar shape (see FIG. **12**). Thus, a distance of the lens barrel **210** in an X-axis direction may be shorter than that in a Y-axis direction. In addition, an internal shape of the lens barrel **210** may correspond to the external shape thereof.

In an embodiment, a shape of the lenses accommodated in the lens barrel **210** may also correspond to the internal shape of the lens barrel **210**. In other words, the lenses may

generally have a circular shape, but may have a shape, a portion of which is cut away. Thus, a distance (a diameter) of each of the lens in the X-axis direction may be shorter than that in the Y-axis direction. Since the Y-axis direction is provided as a thickness direction of a portable electronic device **1000**, minimization of a thickness of the portable electronic device **1000** is possible in the example.

Light having an emission direction changed by a reflecting module **100** is refracted while travelling through the lenses. The optical axis (a Z axis) of the lenses is formed to be perpendicular to a thickness direction (the Y axis direction) of the lens module **100**. The lens barrel **210** is inserted into the carrier **220** and fixed thereto, while the carrier **220** is configured to be moved in an optical axis (the Z axis) direction together with the lens barrel **210** to implement an AF function. For example, the carrier **220** is configured to move in a direction in which light having an emission direction changed by the reflecting module **100** travels through the lenses (including the opposite direction).

The second driving portion **240** generates driving power to move the carrier **220** in the optical axis (the Z axis) direction. In other words, the second driving portion **240** moves the carrier **220** in order to change a distance between the carrier **220** and the reflecting module **100**. In further detail, the second driving portion **240** includes magnets **241***a* and **243***a* and includes coils **241***b* and **243***b* disposed to face the magnets **241***a* and **243***a*. In a case in which power is applied to the coils **241***b* and **243***b*, the carrier **220** (including the magnets **241***a* and **243***a* mounted therein) are moved in the optical axis (the Z axis) direction by electromagnetic force between the magnets **241***a* and **243***a* and the coils **241***b* and **243***b*.

The magnets **241***a* and **243***a* are mounted in the carrier **220**. In greater detail, the magnets **241***a* and **243***a* are mounted on a side surface of the carrier **220**. The coils **241***b* and **243***b* are mounted in the second housing **230**. For example, the coils **241***b* and **243***b* are mounted in the second housing **230** by a medium of an AF substrate **245**. The coils **241***b* and **243***b* are mounted in the AF substrate **245**, while the AF substrate **245** is mounted in the second housing **230**. A reinforced plate **246** is mounted below the AF substrate **245** to reinforce strength of the AF substrate **245**.

In the example, a closed loop control method is performed to detect a position of the carrier **220** and provide notice of the position, when the carrier **220** is moved. Thus, a position sensor **243***c* is needed to control a closed loop. The position sensor **243***c* may be provided as a hall sensor. The position sensor **243***c* is disposed on an internal side or an external side of a coil **243***b*. The position sensor **243***c* may be mounted on the AF substrate **245** including the coil **243***b* mounted therein.

The carrier **220** is supported by the second housing **230** to be moved in the optical axis (the Z axis) direction. In further detail, ball members **250** are interposed between the carrier **220** and the second housing **230**. The ball members **250** play a role in guiding the carrier **220** in a process of AF. In addition, the ball members **250** also play a role in maintaining an interval between the carrier **220** and the second housing **230**. The ball members **250** are configured to roll in the optical axis (the Z axis) direction, in a case in which driving power is generated in the optical axis (the Z axis) direction. Thus, the ball members **250** guide movement of the carrier **220** in the optical axis (the Z axis) direction.

Guide grooves **221** and **231** accommodating ball members **250** are formed on one or a combination of surfaces of facing surfaces of the carrier **220** and the second housing **230**. The ball members **250** are accommodated in the guide grooves **221** and **231** to be inserted between the carrier **220** and the second housing **230**. The guide grooves **221** and **231** may be elongated in the optical axis (the Z axis) direction.

While the ball members **250** are accommodated in the guide grooves **221** and **231**, the ball members **250** may not be moved in a first axis (an X axis) and a second axis (a Y axis) direction. The ball members **250** may only be moved in the optical axis (the Z axis) direction. To this end, a planar shape of each of the guide grooves **221** and **231** may be rectangular and elongated in the optical axis (the Z axis) direction.

In an embodiment, in order to maintain a state in which the ball members **250** are in contact with the carrier **220** and the second housing **230**, the carrier **220** is pressed toward the second housing **230**. Because the lens barrel **210** is inserted into the carrier **220** and fixed thereto, the lens barrel **210** is also pressed toward the second housing **230**. To this end, the second housing **230** includes a second yoke **260** mounted therein, in order to face the magnets **241***a* and **243***a* mounted in the carrier **220**. The second yoke **260** is a magnetic material.

The second yoke **260** and the magnets **241***a* and **243***a* are magnetically attractive. Thus, the carrier **220** may be moved in the optical axis (the Z axis) direction by driving power of the second driving portion **240** while the carrier **220** is in contact with the ball members **250**. In addition, the lens barrel **210** fixed to the carrier **220** is configured to move in a direction different from a direction in which the lens barrel **210** is pressed (e.g., the Y-axis direction). In other words, the lens barrel **210** is pressed in the Y-axis direction and is configured to move in the optical axis (the Z axis) direction.

FIG. **21** is a perspective view of a portable electronic device according to an example. With reference to FIG. **21**, a portable electronic device **1000** according to an example may be provided as a portable electronic device, such as a mobile communications terminal, a smartphone, a personal computer (PC), a PC monitor, a tablet PC, a laptop computer, a virtual reality (VR) apparatus, an augmented reality (AR) apparatus, or a mixed reality (MR) apparatus. Portable electronic device **1000** includes camera modules **400** and **500** mounted therein.

In the case of a camera module (**400**, hereinafter referred to as "a first camera module") among the camera modules **400** and **500**, an optical axis (a Z axis) is disposed to be perpendicular to a thickness direction. As described in this case, the thickness direction is a Y-axis direction, a direction from a front surface of a portable electronic device to a rear surface thereof, or the opposite direction, of the portable electronic device **1000** as described with reference to FIGS. **2**A to **20**. In an embodiment, a first camera module **400** may include a telescopic lens having a relatively long focal length. In addition, the telescopic lens of the first camera module **400** may satisfy $TTL/f<1$. In this expression, TTL is a distance from an object-side surface of a lens disposed closest to an object among a plurality of lenses to an imaging surface of an image sensor with respect to the optical axis (the Z axis). Further, f is a total focal length of the telescopic lens (plurality of lenses) in the expression.

In the case of the other camera module (**500**, hereinafter referred to as "a second camera module") among the plurality of camera modules **400** and **500**, the optical axis (the Y axis) is disposed in the thickness direction (i.e., the Y-axis direction) of the portable electronic device **1000**. In an embodiment, a second camera module **500** may include a wide-angle lens having a relatively short focal length. In addition, the wide-angle lens of the second camera module **500** may satisfy the expression $TTL/f>1$ (where again TTL

is a distance from an object-side surface of a lens disposed closest to the object to an imaging surface and f is a total focal length of the plurality of lens).

A back focal length (BFL) of the first camera module **400** may be longer than that of the second camera module **500**. As described here, BFL is a distance from an image-side surface of a lens disposed closest to an image sensor among a plurality of lenses to an imaging surface of the image sensor (with respect to the optical (Z) axis).

In the meantime, the optical axis (the Z axis) of the first camera module **400** may be disposed to be perpendicular to the optical axis (the Y axis) of the second camera module **500**. Because, in the case of a camera module having a telescopic function, a focal length thereof is formed to be relatively long, a size thereof may be greater than that of a camera module having a wide-angle function. Thus, a total size of the portable electronic device **1000** may be undesirably increased (e.g., a thickness of the portable electronic device **1000**). However, in the example above, the optical axis (the Z axis) of the first camera module **400** having a telescopic function is disposed to be perpendicular to the thickness direction (the Y-axis direction) of the portable electronic device **1000**. Thus, an unwanted increase in the size of the portable electronic device **1000** may be prevented.

An angle of view of the first camera module **400** may be formed to be different from that of the second camera module **500**. For example, the angle of view of the second camera module **500** is wider than that of the first camera module **400**. By designing different angles of view of a plurality of camera modules, an image of a subject may be captured at various depths. For example, in a case in which a subject disposed at an equal distance is captured by the first camera module **400** and the second camera module **500**, the first camera module **400** having a relatively narrow angle of view captures an image having a relatively shallow depth, while the second camera module **500** having a relatively wide angle of view captures a relatively deeper image.

In addition, a zoom function may be implemented using a plurality of images, while a three-dimensional image may also be implemented. Furthermore, an image having high resolution may be generated using two images of a single subject (i.e., synthesis of the images) or a bright image may be generated. Thus, a clear image of a subject may be captured even in low luminance environments.

As set forth above, according to examples of the disclosure, a camera module and a portable electronic device including the same implementing a function, such as an AF function, a zoom function, an OIS function, and the like, and having a relatively simple structure and a relatively small size may be provided. In addition, power consumption of the camera module may be minimized.

While this disclosure includes specific examples, it will be apparent after an understanding of the application that various changes in form and details may be made in these examples without departing from the spirit and scope of the claims and their equivalents. The examples described herein are to be considered in a descriptive sense only, and not for purposes of limitation. Descriptions of features or aspects in each example are to be considered as being applicable to similar features or aspects in other examples. Suitable results may be achieved if the described techniques are performed in a different order, and/or if components in a described system, architecture, device, or circuit are combined in a different manner, and/or replaced or supplemented by other components or their equivalents. Therefore, the scope of the disclosure is defined not by the detailed description, but by the claims and their equivalents, and all variations within the scope of the claims and their equivalents are to be construed as being included in the disclosure.

What is claimed is:

1. A camera module, comprising:

a lens module comprising lenses; and

a reflecting module disposed in front of the lens module and configured to change a path of light to direct light incident on the reflecting module toward the lens module,

wherein the reflecting module comprises

a reflecting member configured to change the path of light,

a holder in which the reflecting member is mounted,

a first housing accommodating the holder, and

a first driving portion providing driving force to the holder,

wherein the holder is configured to be rotated with respect to two axes by the first driving portion,

wherein the first driving portion comprises:

a first magnet disposed on a side surface of the holder;

a second magnet disposed on a surface perpendicular to the side surface of the holder;

a first coil disposed to face the first magnet; and

a second coil disposed to face the second magnet, and

wherein the holder is configured to be pressed toward the first housing.

2. The camera module of claim **1**, wherein a magnetic material is disposed on one of the holder and the first housing, and a magnet is disposed on the other thereof.

3. The camera module of claim **1**, wherein ball members are disposed between the holder and the first housing.

4. The camera module of claim **1**, wherein a substrate is disposed in the first housing, and the first coil and the second coil are disposed on the substrate.

5. The camera module of claim **1**, wherein the reflecting module further comprises a first position sensor and a second position sensor, the first position sensor is disposed on an internal side or an external side of the first coil, and the second position sensor is disposed on an internal side or an external side of the second coil.

6. The camera module of claim **1**, wherein the reflecting member is a mirror or a prism.

7. The camera module of claim **1**, wherein the holder comprises a mounting surface on which the reflecting member is mounted, and the mounting surface is an inclined surface.

8. The camera module of claim **1**, wherein the two axes are perpendicular to each other.

9. The camera module of claim **1**, wherein the lens module further comprises a lens barrel accommodating the lenses, the lens barrel has a shorter length in a second axis direction than in a first axis direction, the first axis direction is perpendicular to an optical axis direction of the lenses, and the second axis direction is perpendicular to both the first axis direction and the optical axis direction.

10. The camera module of claim **1**, wherein the lenses have a shorter length in a second axis direction than in a first axis direction, the first axis direction is perpendicular to an optical axis direction of the lenses, and the second axis direction is perpendicular to both the first axis direction and the optical axis direction.

11. The camera module of claim **1**, wherein the lens module further comprises:

a lens barrel including the lenses;

a carrier in which the lens barrel is mounted; a second housing accommodating the carrier; and

a second driving portion configured to change a distance between the carrier and the reflecting module by moving the carrier.

12. The camera module of claim **11**, wherein ball members configured to guide movement of the carrier are disposed between the carrier and the second housing.

13. The camera module of claim **12**, wherein guide grooves in which the ball members are disposed are formed on one or a combination of surfaces of facing surfaces of the carrier and the second housing, and the guide grooves are elongated in an optical axis direction of the lenses.

14. The camera module of claim **11**, wherein the second driving portion comprises magnets mounted in the carrier and coils disposed in the second housing to face the magnets, and a second yoke is mounted in the second housing, the second yoke configured to attract the magnets.

15. A reflector comprising:

a reflecting member configured to change a path of incident light;

a holder in which the reflecting member is disposed;

a housing accommodating the holder; and

a driving portion providing driving force to the holder,

wherein the holder is configured to be rotated with respect to a first axis and a second axis,

wherein the driving portion comprises:

a first magnet disposed on a side surface of the holder;

a second magnet disposed on a surface perpendicular to the side surface of the holder;

a first coil disposed to face the first magnet; and

a second coil disposed to face the second magnet, and

wherein ball members are disposed between the holder and the housing.

16. The reflector of claim **15**, wherein a substrate is disposed in the housing, and the first coil and the second coil are disposed on the substrate.

17. The reflector of claim **15**, further comprising a first position sensor and a second position sensor,

wherein the first position sensor is disposed on an internal side or an external side of the first coil, and the second position sensor is disposed on an internal side or an external side of the second coil.

18. The reflector of claim **15**, wherein the first axis and the second axis are perpendicular to each other.

* * * * *