US 20190353455A1

(19) United States

(12) Patent Application Publication

McHale et al.

(10) Pub. No.: US 2019/0353455 A1

(43) Pub. Date: Nov. 21, 2019

(54) **OPTICAL DEVICE WITH DAY VIEW AND SELECTIVE NIGHT VISION FUNCTIONALITY**

(71) Applicant: **Trackingpoint, inc.**, Pflugerville, TX (US)

(72) Inventors: **John Francis McHale**, Austin, TX (US); **Douglas Richard Hammond**, Austin, TX (US)

(73) Assignee: **Trackingpoint, inc.**, Pflugerville, TX (US)

(21) Appl. No.: **15/939,601**

(22) Filed: **Mar. 29, 2018**

Publication Classification

(51) **Int. Cl.**

F41G 1/34	(2006.01)
H04N 5/335	(2006.01)
G02B 23/02	(2006.01)
G02B 23/12	(2006.01)
F41G 1/38	(2006.01)

(52) **U.S. Cl.**

CPC ***F41G 1/345*** (2013.01); ***H04N 5/335*** (2013.01); ***F41G 1/38*** (2013.01); ***G02B 23/12*** (2013.01); ***G02B 23/02*** (2013.01)

(57) **ABSTRACT**

In some embodiments, an apparatus can include an optical device configured to provide a day view image mode and a night view image mode. The optical device may include an optics assembly configured to receive light from a view area and a control circuit including one or more sensors and a display interface. The control circuit may be configured to receive a mode selection input and to selectively enable at least one of the display interface and the one or more sensors in response to the mode selection input indicating a night view image mode. The optical device may also include an optical element responsive to a signal from the control circuit to direct at least a portion of the light toward the one or more sensors.

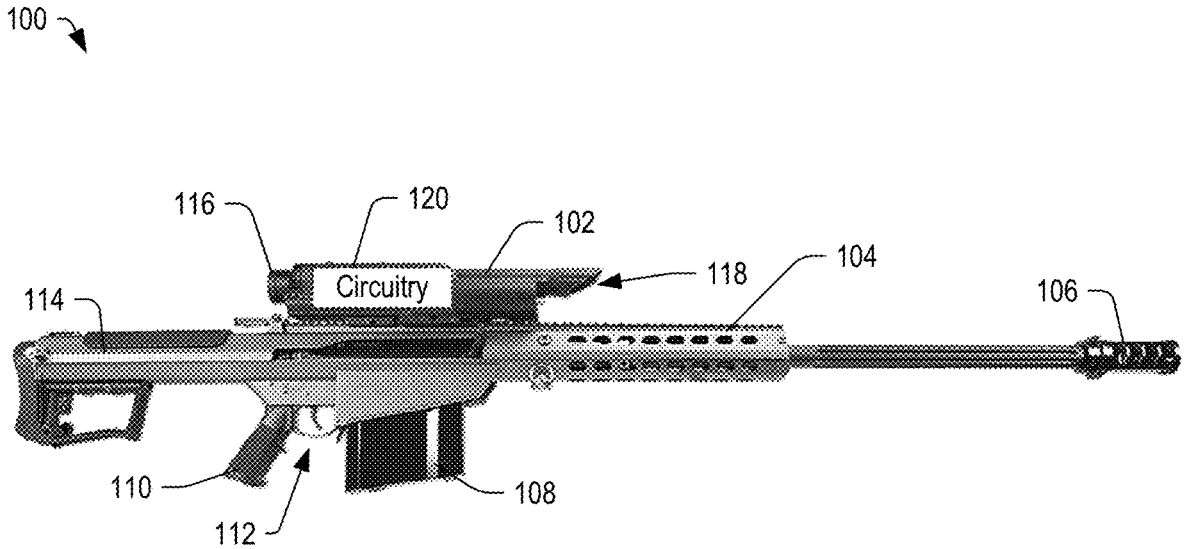

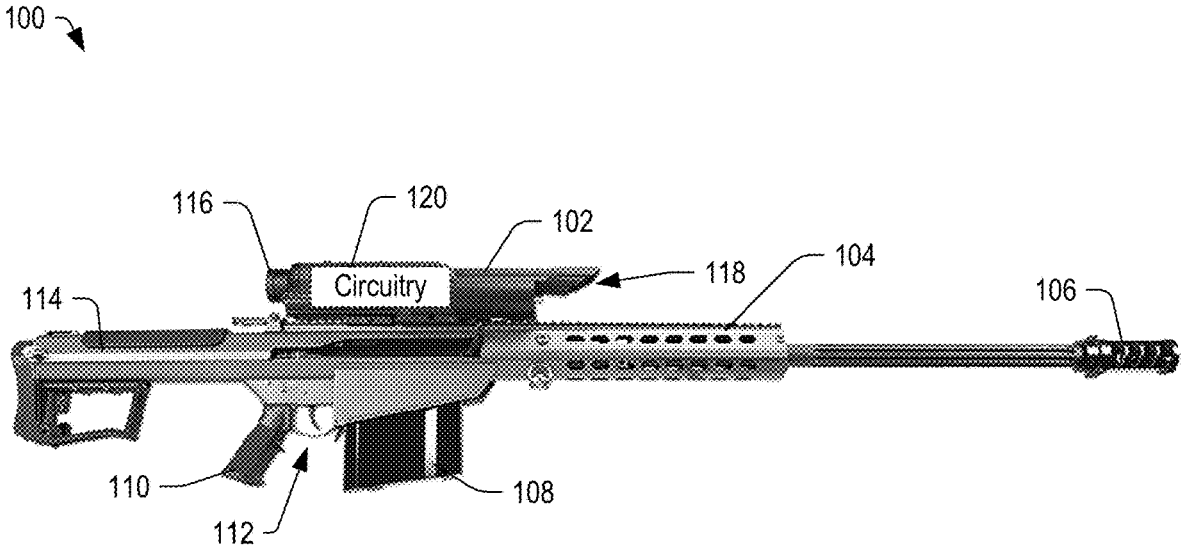

FIG. 1

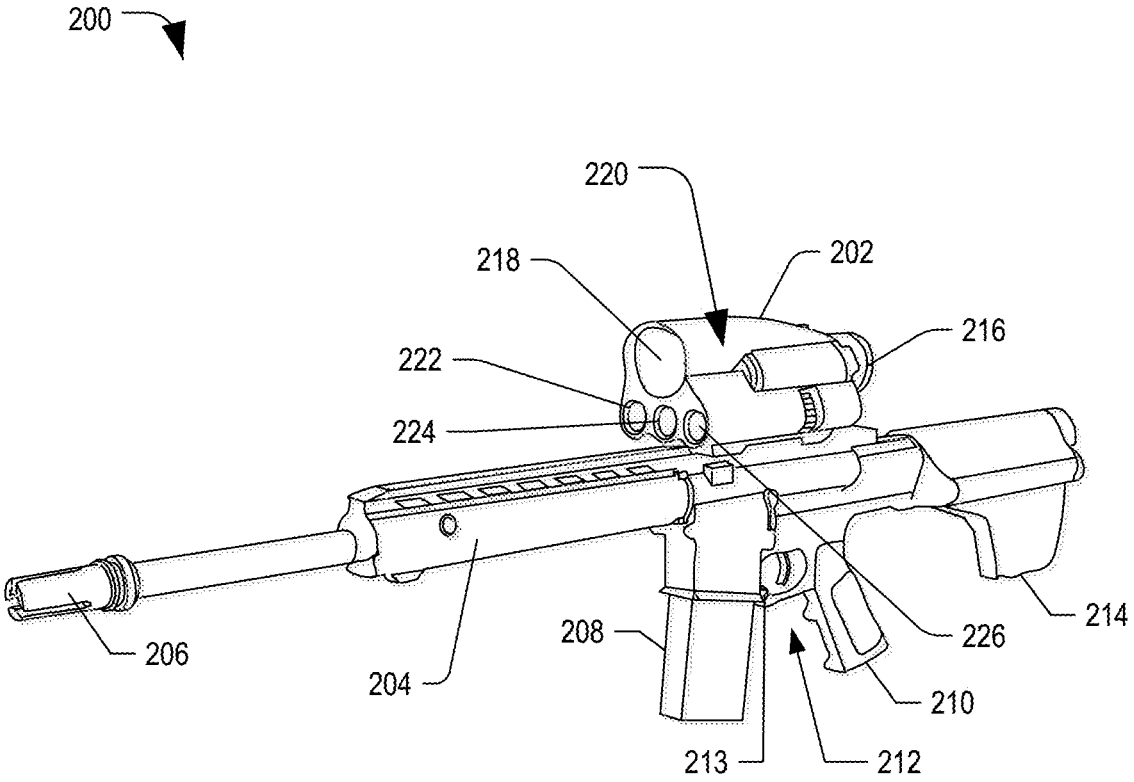

FIG. 2

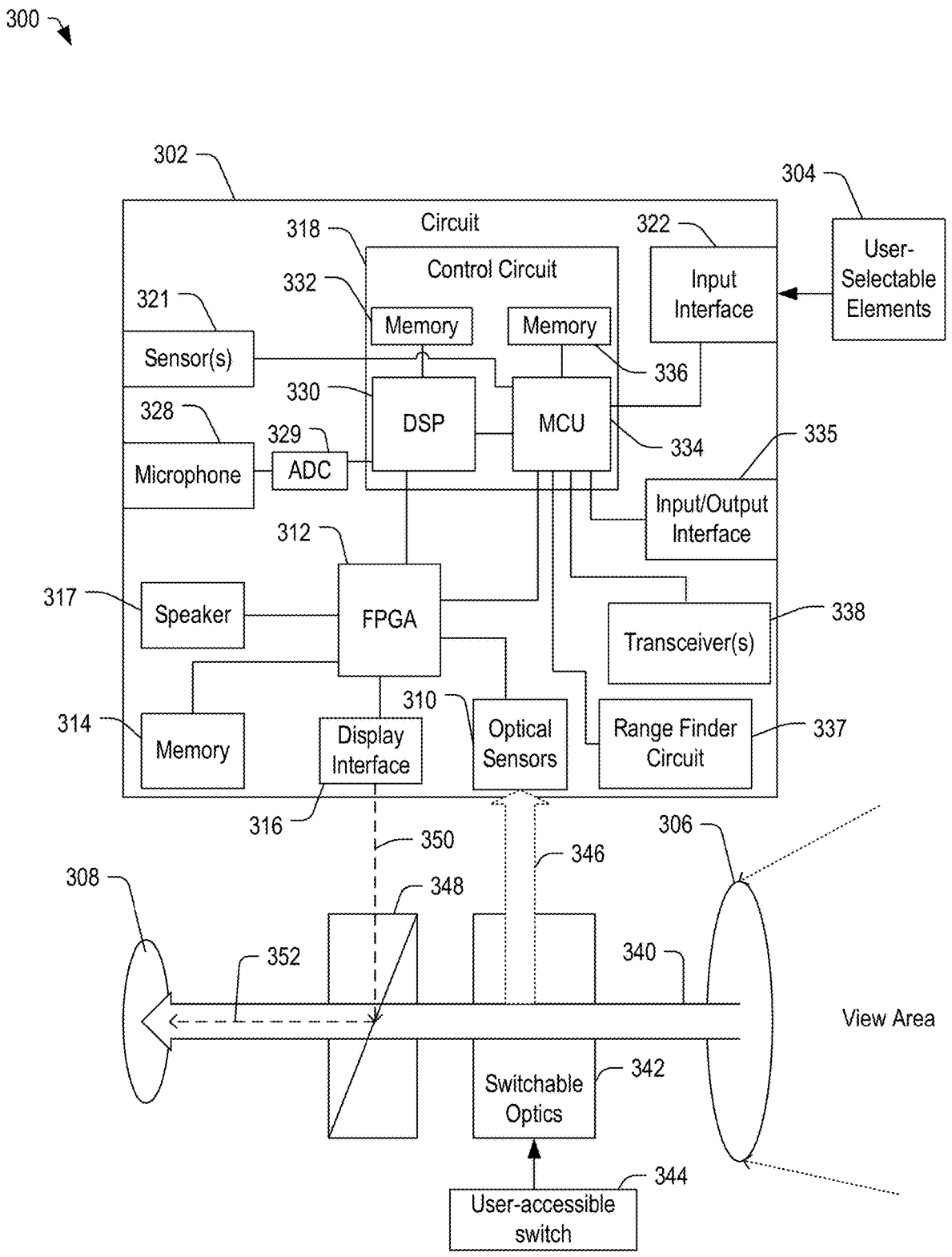
300
302
304
Circuit
318
322
Control Circuit
User-Selectable Elements
Input Interface
332
321
Memory
Memory
Sensor(s)
336
330
DSP
MCU
328
329
334
335
Microphone
ADC
Input/Output Interface
312
317
Speaker
FPGA
338
Transceiver(s)
310
314
Memory
Display Interface
Optical Sensors
Range Finder Circuit
337
316
350
346
306
308
348
352
340
View Area
342
Switchable Optics
344
User-accessible switch

FIG. 3

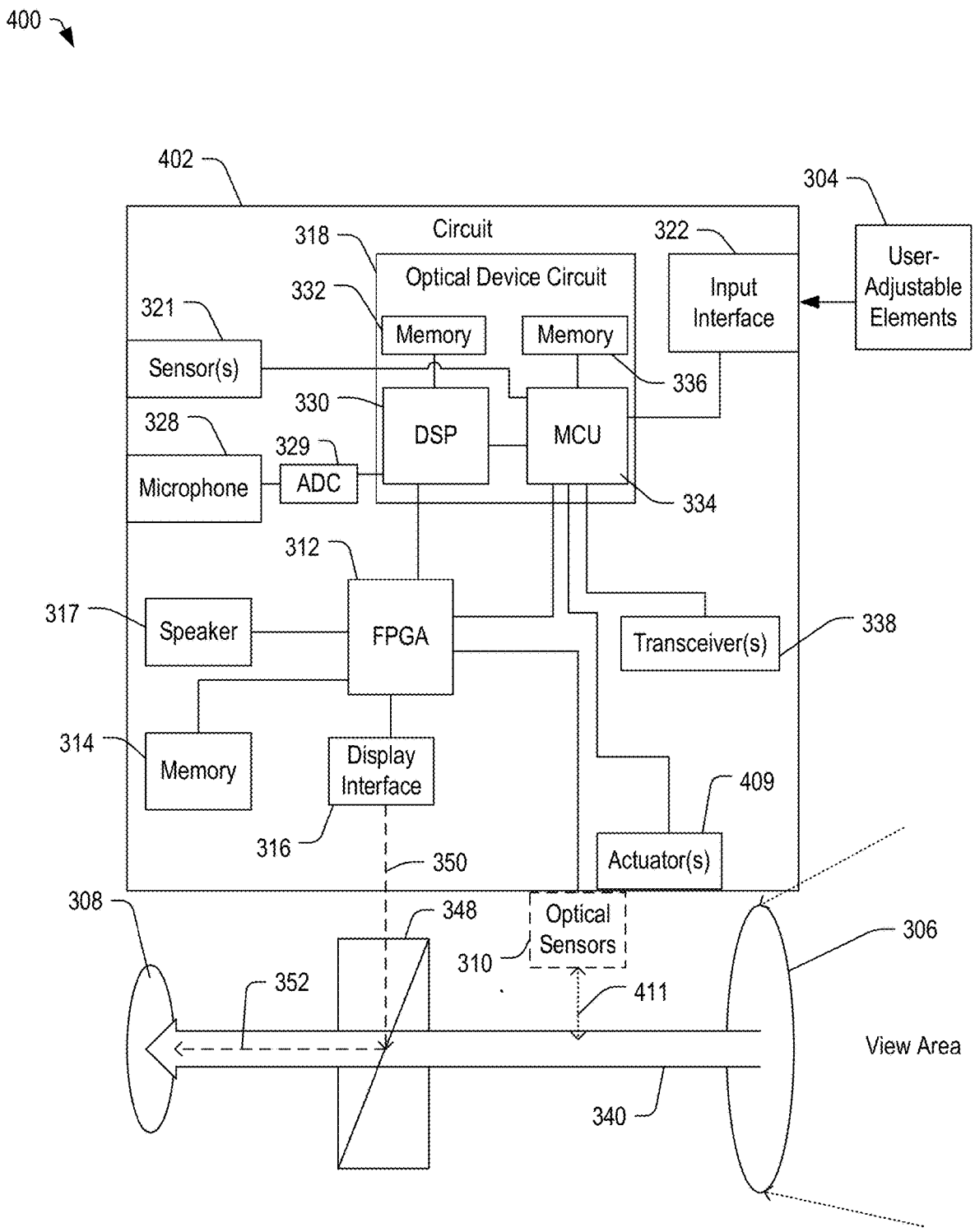
400
402
Circuit
318
Optical Device Circuit
322
Input Interface
304
User-Adjustable Elements
332
Memory
Memory
336
321
Sensor(s)
330
DSP
MCU
328
329
Microphone
ADC
334
312
317
Speaker
FPGA
Transceiver(s)
338
314
Memory
Display Interface
409
316
350
Actuator(s)
308
348
Optical Sensors
306
310
352
411
View Area
340

FIG. 4

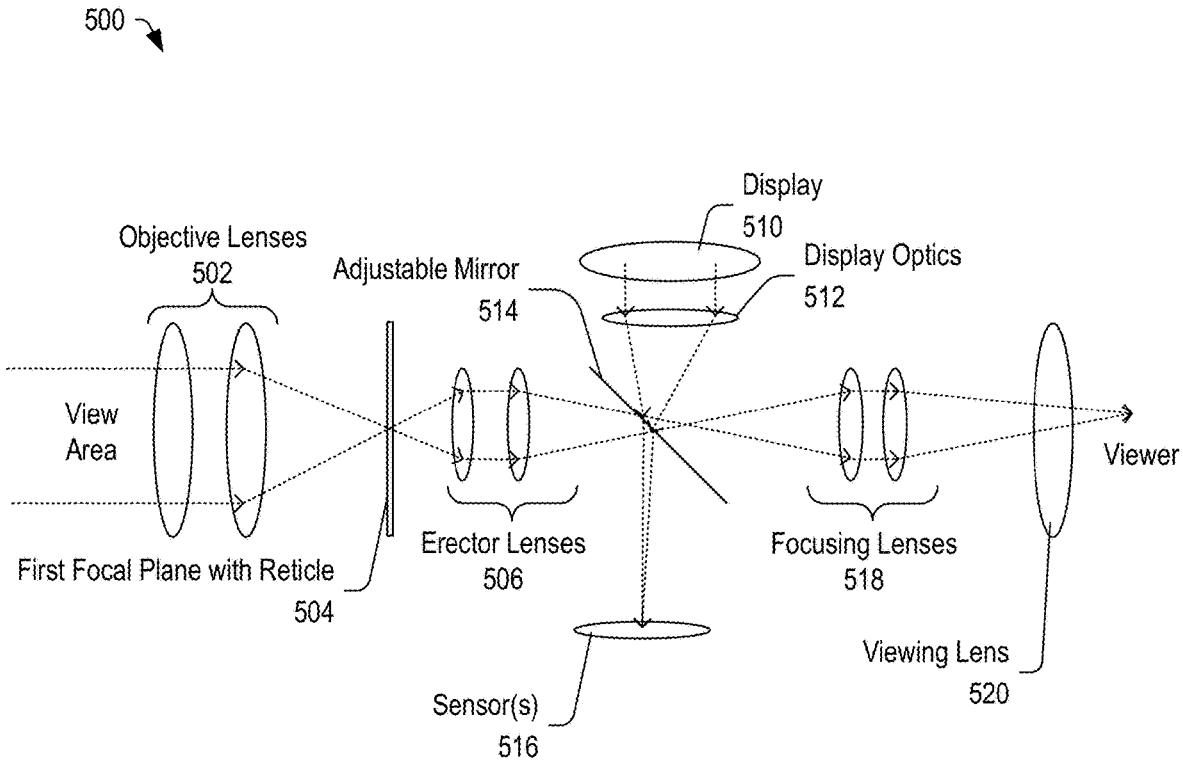
500
Objective Lenses
502
Adjustable Mirror
514
Display
510
Display Optics
512
View
Area
Viewer
First Focal Plane with Reticle
504
Erector Lenses
506
Focusing Lenses
518
Viewing Lens
520
Sensor(s)
516

FIG. 5

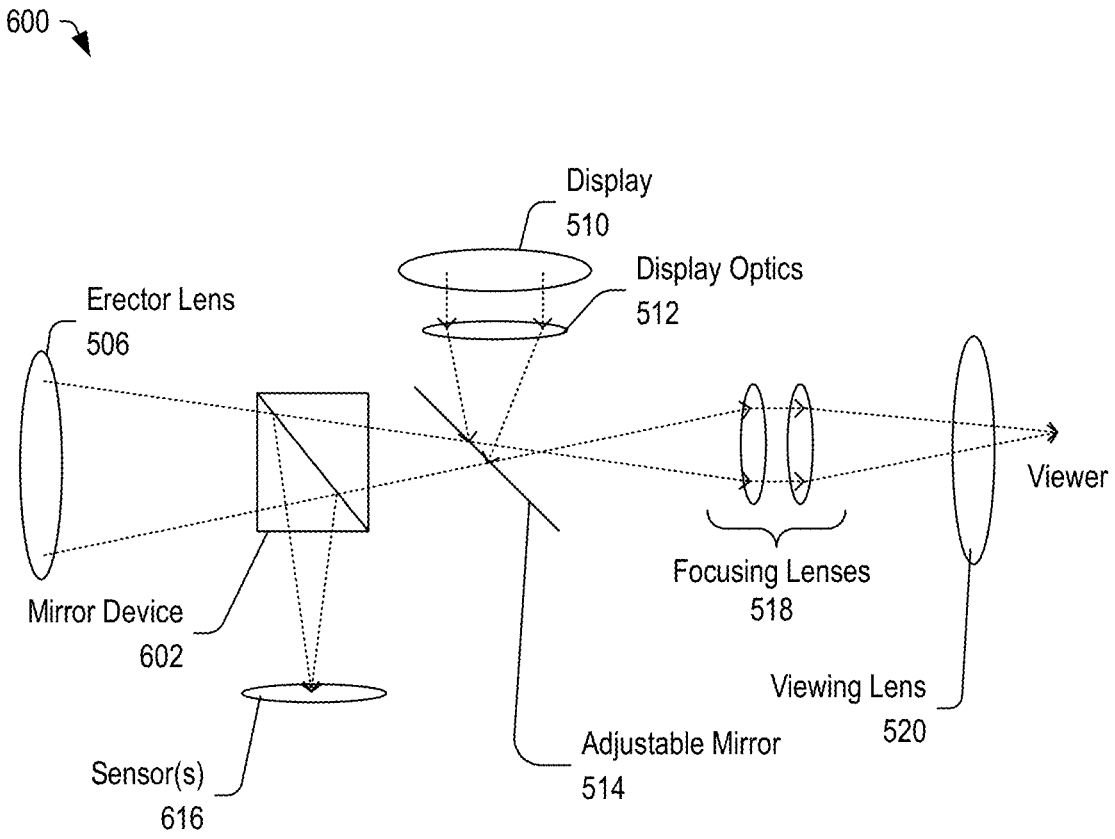
600
Display
510
Display Optics
512
Erector Lens
506
Viewer
Focusing Lenses
518
Mirror Device
602
Viewing Lens
520
Adjustable Mirror
514
Sensor(s)
616

FIG. 6

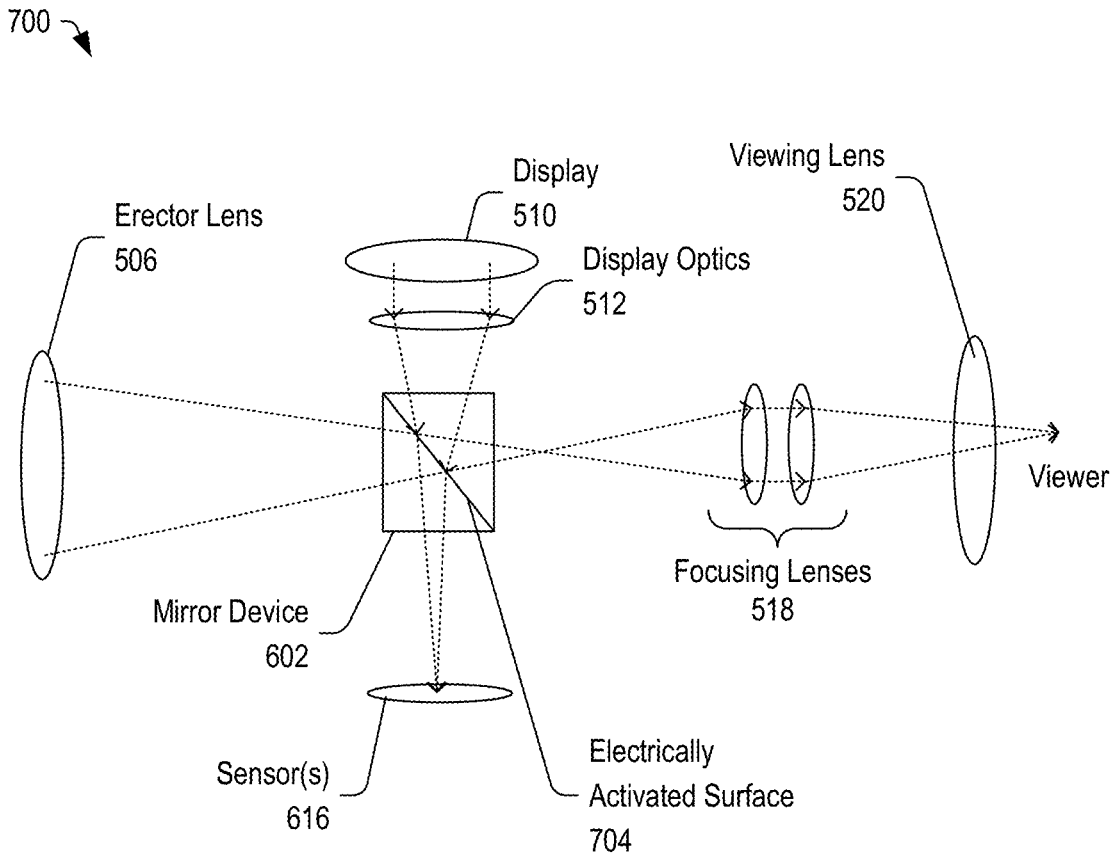
700
Display
510
Viewing Lens
520
Erector Lens
506
Display Optics
512
Viewer
Focusing Lenses
518
Mirror Device
602
Sensor(s)
616
Electrically
Activated Surface
704

FIG. 7

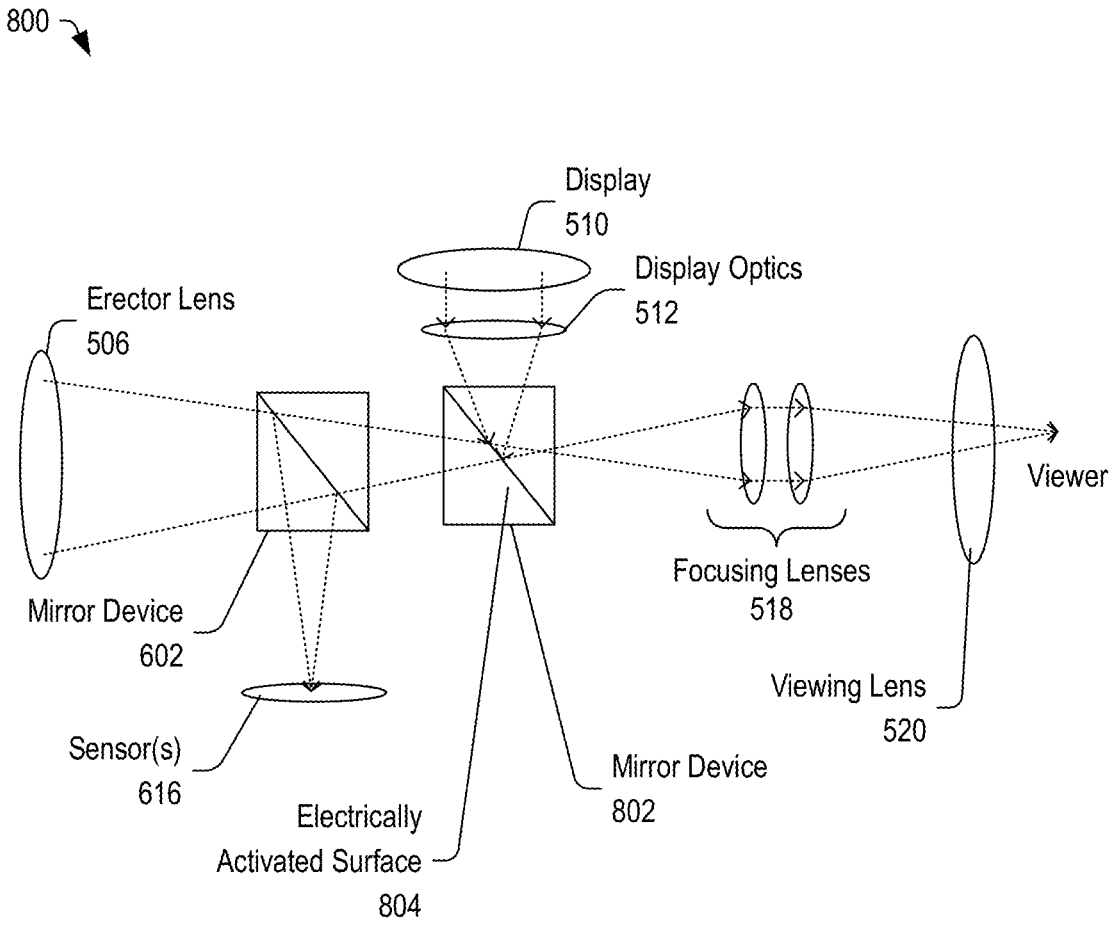
800
Display
510
Display Optics
512
Erector Lens
506
Viewer
Focusing Lenses
518
Mirror Device
602
Viewing Lens
520
Sensor(s)
616
Mirror Device
802
Electrically
Activated Surface
804

FIG. 8

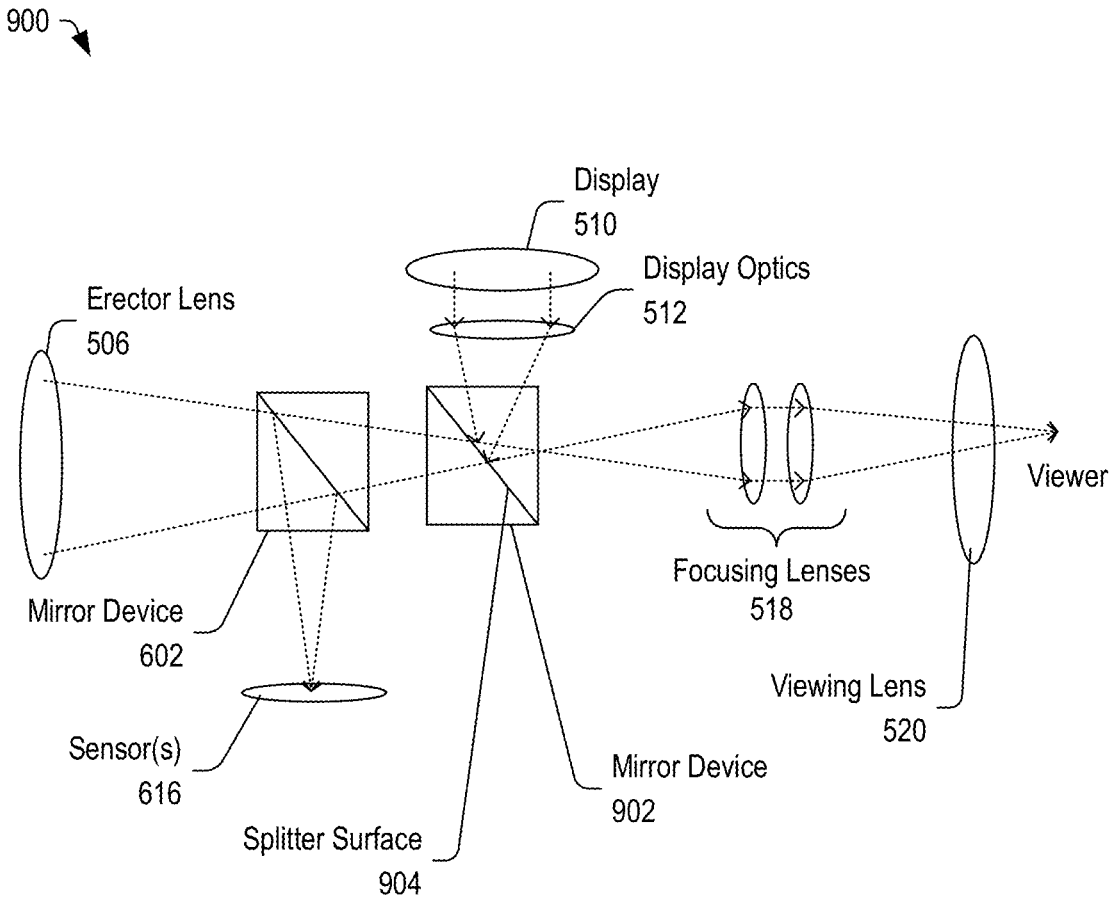
900
Display
510
Display Optics
512
Erector Lens
506
Viewer
Focusing Lenses
518
Mirror Device
602
Viewing Lens
520
Sensor(s)
616
Mirror Device
902
Splitter Surface
904

FIG. 9

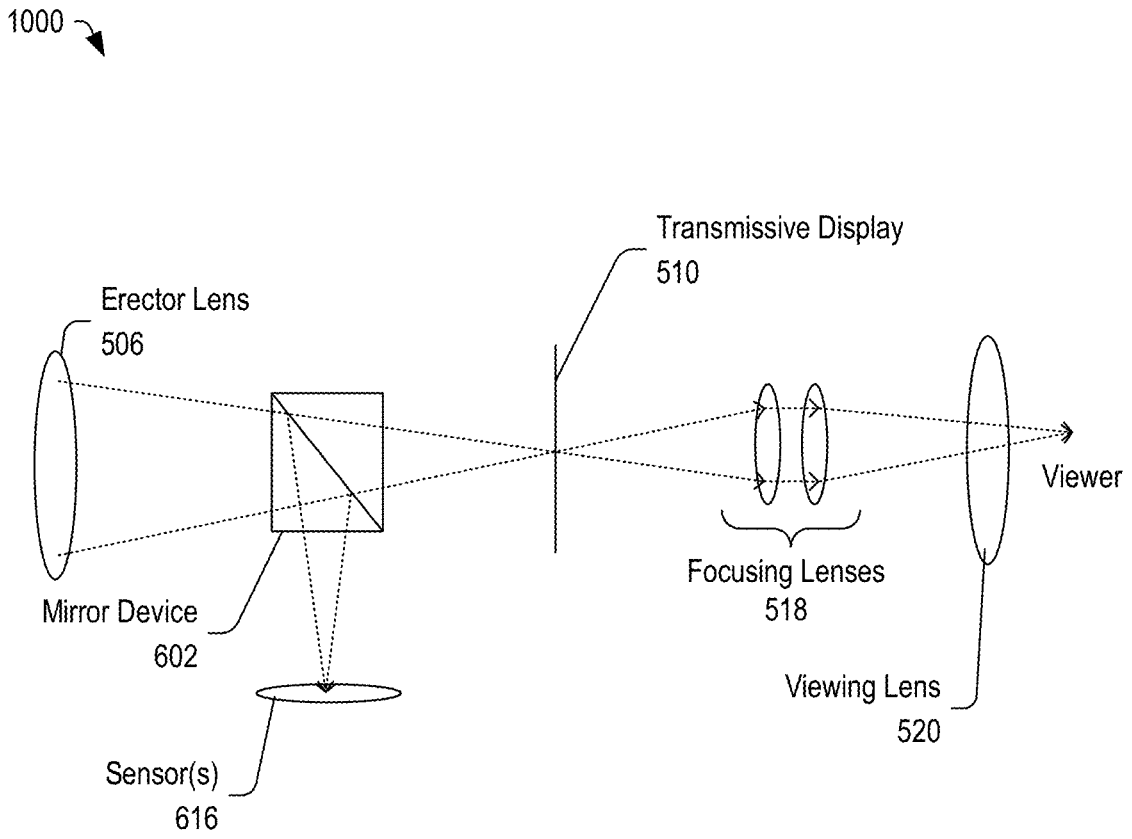
1000
Transmissive Display
510
Erector Lens
506
Viewer
Focusing Lenses
518
Mirror Device
602
Viewing Lens
520
Sensor(s)
616

FIG. 10

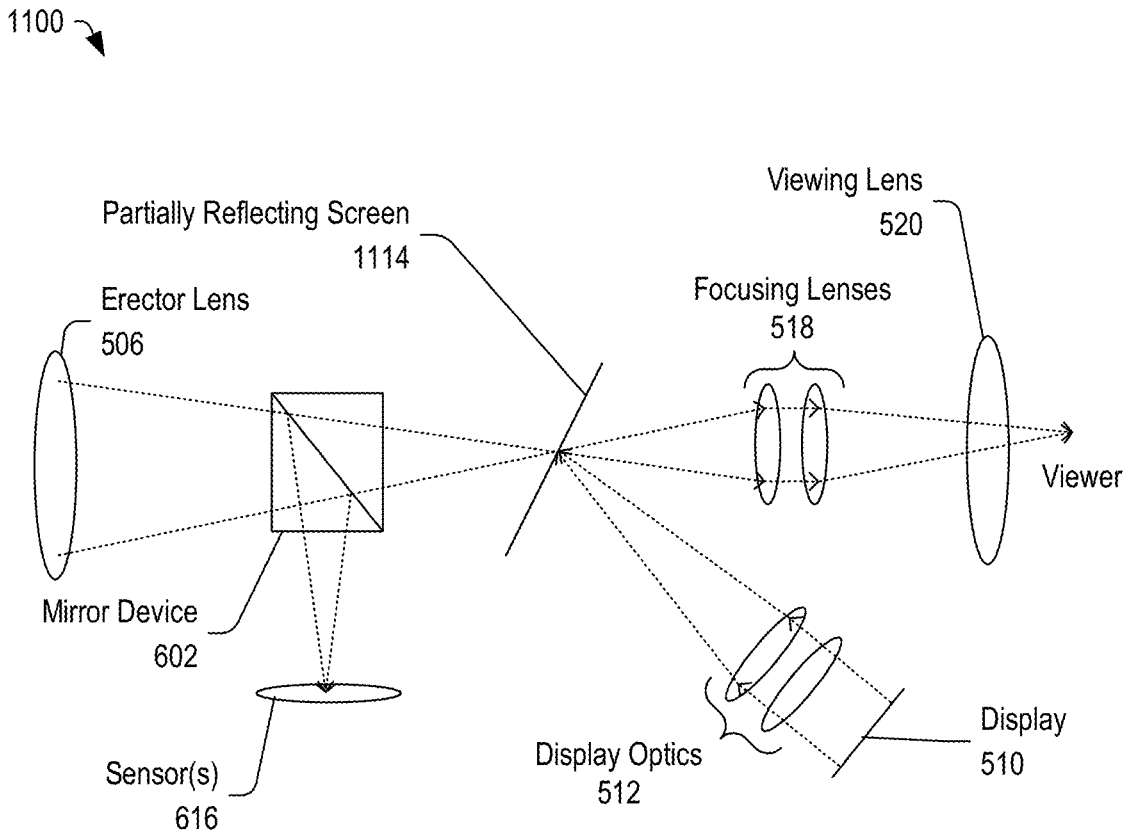
1100
Partially Reflecting Screen
1114
Viewing Lens
520
Erector Lens
506
Focusing Lenses
518
Viewer
Mirror Device
602
Sensor(s)
616
Display Optics
512
Display
510

FIG. 11

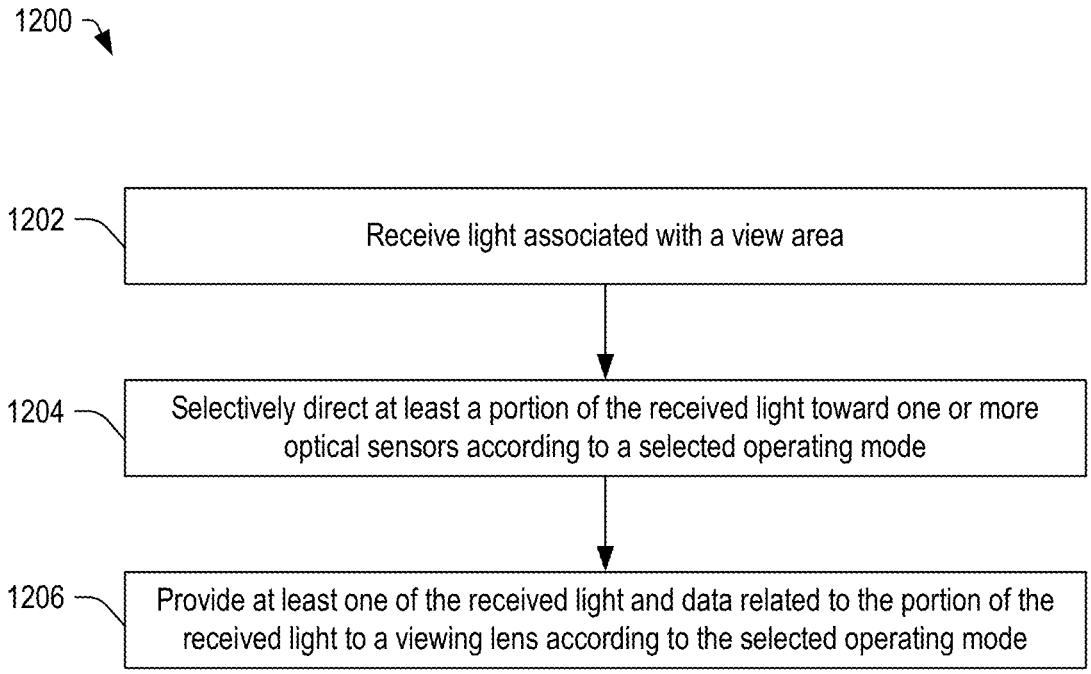
1200
1202
Receive light associated with a view area
1204
Selectively direct at least a portion of the received light toward one or more optical sensors according to a selected operating mode
1206
Provide at least one of the received light and data related to the portion of the received light to a viewing lens according to the selected operating mode

FIG. 12

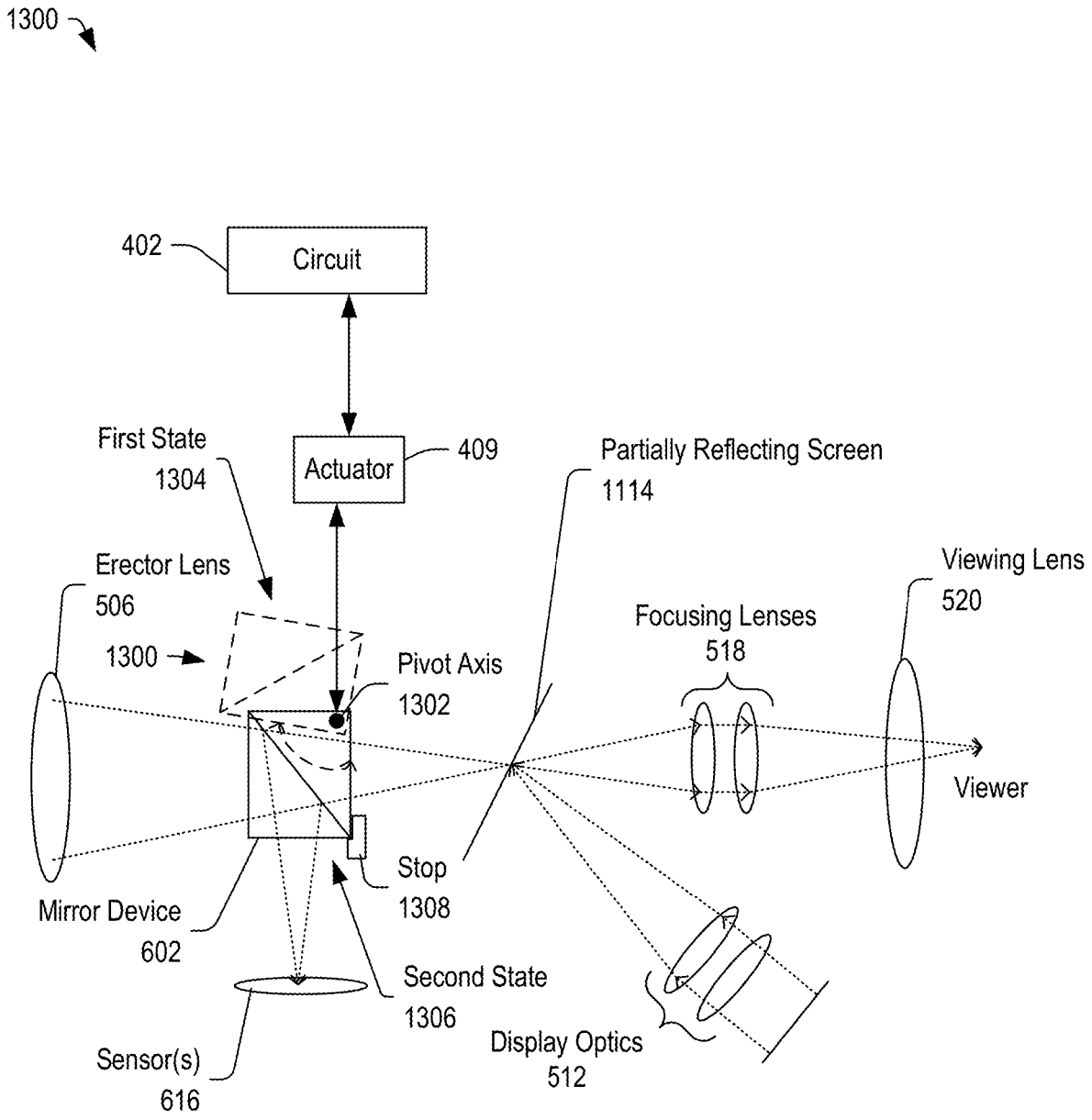
1300
402
Circuit
Actuator
409
First State
1304
Partially Reflecting Screen
1114
Erector Lens
506
Viewing Lens
520
Focusing Lenses
518
1300
Pivot Axis
1302
Viewer
Stop
1308
Mirror Device
602
Second State
1306
Display Optics
512
Sensor(s)
616

FIG. 13

OPTICAL DEVICE WITH DAY VIEW AND SELECTIVE NIGHT VISION FUNCTIONALITY

FIELD

[0001] The present disclosure is generally related to optical devices, such as rifle scopes and telescopes, and more particularly to an optical device with day view and selective night vision functionality.

BACKGROUND

[0002] Portable optical devices, such as spotting scopes, binoculars, monoculars, cameras, and telescopes may provide increased magnification, but are typically limited to daytime use. In some examples, portable optical devices may be configured to mount to a firearm, such as a rifle or other firearm, and may be configured to include a reticle.

SUMMARY

[0003] In some embodiments, an apparatus can include an optical device configured to provide a day view image mode and a night view image mode. The optical device may include an optics assembly configured to receive light from a view area and a control circuit including one or more sensors and a display interface. The control circuit may be configured to receive a mode selection input and to selectively enable at least one of the display interface and the one or more sensors in response to the mode selection input indicating a night view image mode. The optical device may also include an optical element responsive to a signal from the control circuit to direct a portion of the light toward the one or more sensors.

[0004] In some other embodiments, an apparatus may include an optical device configured to provide a day view image mode and a night view image mode. The optical device may include a plurality of lenses including an objective lens to receive light from a viewing area and including a viewing lens through which a user may perceive at least a portion of the received light. The plurality of lenses may be configured to focus the received light along a light path from the objective lens to the viewing lens. The optical device may further include an optical element disposed between the aperture and the viewing lens and configured to selectively redirect a portion of the light from the light path. The optical device may also include a control circuit including one or more sensors, at least one processor circuit, and a display interface. The control circuit may be configured to selectively disable at least one of the display interface and the one or more sensors in the day view image mode and to selectively enable at least one of the display interface and the one or more sensors in a night view image mode.

[0005] In still other embodiments, an apparatus can include an optical device including an optics assembly configured to receive light from a view area through an objective lens and to focus the light toward a viewing lens. The optical device may include one or more optical sensors, an optical element configured to selectively direct a portion of the light toward the one or more optical sensors, and a control circuit configured to receive a mode selection input. When the mode selection input indicates a day view image mode, the control circuit may be configured to selectively disable the one or more sensors and to control the optical element to not direct the portion. When the mode selection input indicates a night view image mode, the control circuit may be configured to selectively enable the one or more sensors and to control the optical element to direct the portion toward the one or more optical sensors.

BRIEF DESCRIPTION OF THE DRAWINGS

[0006] FIG. **1** depicts a side view of a firearm system including an optical device with selective night vision functionality, in accordance with certain embodiments of the present disclosure.

[0007] FIG. **2** depicts a perspective view of a firearm system including an optical device with selective night vision functionality, in accordance with certain embodiments of the present disclosure.

[0008] FIG. **3** depicts a block diagram of a portion of an optical device with selective night vision functionality accessible by a user-accessible mechanical switch, in accordance with certain embodiments of the present disclosure.

[0009] FIG. **4** depicts a block diagram of a portion of an optical device with selective night vision functionality accessible by a user-accessible button, in accordance with certain embodiments of the present disclosure.

[0010] FIG. **5** depicts a diagram of a portion of an optical device with a single actuatable element configured to enable selective night vision functionality, in accordance with certain embodiments of the present disclosure.

[0011] FIG. **6** depicts a diagram of a portion of an optical device with a pair of light splitting elements configured to enable selective night vision functionality, in accordance with certain embodiments of the present disclosure.

[0012] FIG. **7** depicts a diagram of a portion of an optical device with an electrically controllable light splitting element configured to enable selective night vision functionality, in accordance with certain embodiments of the present disclosure.

[0013] FIG. **8** depicts a diagram of a portion of an optical device with a pair of light splitting elements, at least one of which may be an electrically controllable light splitting element, configured to enable selective night vision functionality, in accordance with certain embodiments of the present disclosure.

[0014] FIG. **9** depicts a diagram of a portion of an optical device with a pair of light splitting elements configured to enable selective night vision functionality, in accordance with certain embodiments of the present disclosure.

[0015] FIG. **10** depicts a diagram of a portion of an optical device with a light splitting element and including a transmissive display, in accordance with certain embodiments of the present disclosure.

[0016] FIG. **11** depicts a diagram of a portion of an optical device with a light-splitting element and including a partially reflective screen, in accordance with certain embodiments of the present disclosure.

[0017] FIG. **12** depicts a block diagram of a method of switching between an optical device having a day view optical functionality and selectable a night vision functionality, in accordance with certain embodiments of the present disclosure.

[0018] FIG. **13** depicts a diagram of a portion of an optical device including a light-splitting element that can be mechanically adjusted into and out of a light path, in accordance with certain embodiments of the present disclosure.

[0019] In the following drawings, reference numbers may be reused to indicate the same or similar elements.

DETAILED DESCRIPTION OF ILLUSTRATIVE EMBODIMENTS

[0020] In the following detailed description of the embodiments, reference is made to the accompanying drawings which form a part hereof, and in which are shown by way of illustration of specific embodiments. It is to be understood that other embodiments may be utilized and structural changes may be made without departing from the scope of the present disclosure.

[0021] Day view optical scopes rely on ambient light to illuminate the view area, and the user may perceive the view area of the optical device according to the available ambient light. In low light conditions, the day view optical scope may be less useful.

[0022] Embodiments of an optical device are described below that may be configured to provide two or more viewing modes. In a day view mode, the optical device may provide a direct view image to a viewing lens of the optical device. In a night view mode, the optical device may provide a digital image to the viewing lens, where the digital image is derived from data determined from one or more optical sensors configured to receive light from the viewing area. In a fused image mode, the optical device may be configured to fuse the digital image with the direct view image and provide the fused image to the viewing lens. Other viewing modes are also possible.

[0023] In some embodiments, the reticle may be etched on a surface placed at a focal plane. In other embodiments, the reticle may be digitally generated and superimposed over the scene by a light-emitting diode (LED) display, a liquid crystal display (LCD), an organic light-emitting diode (OLED) display, a liquid crystal on silicon (LCoS) display, a laser simulated hologram display, another display, or any combination thereof.

[0024] The optical device may include one or more optical sensors configured to capture light from the view area. The optical sensors may include a complementary metal oxide semiconductor (CMOS) array, a charge-coupled device (CCD) array, an avalanche photodiode (APD) array, a cooled or uncooled infrared detector array, a short-wave infrared (SWIR) array, a midwave infrared (MWIR) sensor, a long wave infrared sensor (LWIR), another optical sensor circuit, or any combination thereof.

[0025] In the night view mode or in the fused image mode, the sensor data can be provided to a processor of the optical device, which may be configured to provide display data to the same display that may be used to generate the reticle. The display data may be provided to the viewing lens via a combination of a collimating lens, a beam splitter, a collimating half-silvered mirror, a polished metal mirror, a dielectric mirror, a coated glass mirror, a switchable mirror, an IR mirror, another optical element, or any combination thereof.

[0026] In some embodiments, when the display is activated and the one or more beam splitter elements are activated, image data captured by the sensor and optionally the reticle may be provided to the viewing lens to provide a fused optical view. In one possible example, if the reflecting device is a beam splitter or collimating half silvered/dichroic mirror, and if the display is activated to project the image data received from the sensor (and optionally the reticle), the optical device may be in a fused viewing mode in which the image data from the display (including the reticle) may be fused with the direct view image to provide a fused image to the viewing lens. In a particular example, the digital image data from the display may be superimposed on the direct view image to produce the fused image.

[0027] In another particular embodiment, if the reflecting device is a polished metal mirror, a dielectric mirror, an infrared mirror, a coated glass mirror, a mechanically or electrically switchable mirror, an IR mirror, and another light splitting element and if the display is activated to project the image data received from the optical sensor (and optionally to project the reticle), the optical device may be in a night view mode. In some embodiments, the mirrors and beam splitters can be electrically or mechanically switched in and out of the optical path to enable the different viewing modes.

[0028] In some embodiments, a switchable mirror can be switched in and out of the optical path to receive light from the objective lens system. When switched into the optical path the mirror reflects the received light toward the sensor (Night Vision). When the mirror is switched out of the optical path received light passes optically to the human eye (Day Vision). The switchable mirror can be mechanically switched or can also be comprised of a liquid crystal (LC) or other material that can be electrically switched from reflective to transparent. The mirror can be polished metal mirror, dielectric mirror, coated glass mirror, or IR mirror. When in night vision mode the sensor image is transmitted to a single display which could be an LCD, OLED, or LCoS display. When in night vision mode a second switchable mirror is switched into the optical path to receive light from the display. The light received from the display is reflected through the ocular lens system to the human eye.

[0029] Embodiments of an optical device, such as a telescope, spotting scope, or a rifle scope, are described below that may be configured to operate in a day view mode, a night view mode, and a fused image mode. In some embodiments, the optical device includes one or more light-splitting elements configured to direct at least a portion of the received light toward one or more optical sensors. The portion of the light may include all of the received light (less a fraction that may be lost due), light of certain frequencies, a percentage of the received light, or any combination thereof. In some embodiments, the one or more optical sensors may be configured to sense light in a particular range of frequencies, such as an infrared frequency range. One example of an optical device is described below with respect to FIG. **1**.

[0030] FIG. **1** depicts a side view of a firearm system **100** including an optical device **102** with selective night vision functionality, in accordance with certain embodiments of the present disclosure. The optical device **102** may be coupled to a firearm **104**. While the firearm **104** is depicted as a semiautomatic rifle, the firearm **104** is illustrative only, and the optical device **102** may be used with other types of rifles and other projectile weapons, such as an airsoft gun, a pistol, a bow, or another type of projectile weapon.

[0031] In the illustrated example, the firearm **104** includes a muzzle **106**, a magazine **108**, a grip **110**, a trigger assembly **112**, and a stock **114**. In some embodiments, batteries may be included within the stock **114**. Further, in some embodiments, the trigger assembly **112** may be electronically coupled to the optical device **102**, and the discharge of the

firearm **104** may be selectively controlled by a microprocessor within the optical device **102**. In a particular implementation, the microprocessor may be configured to process optical data from a view area of the optical device and to control the timing of discharge of the firearm **104** (such as by selectively restricting and allowing release of the firing pin) based on a determination of the alignment of the aim point of the firearm **104** relative to a selected target within the view area.

[0032] The optical device **102** may include an objective lens system **118**, which may receive light from the view area of the optical device **102** and which may focus the received light toward a viewing lens **116** along a direct view optical path. The optical device **102** may also include circuitry **120**, which may include sensors (optical, environmental, tilt, motion, and so on), processing circuitry, a display, control circuitry, other circuitry, or any combination thereof. In some embodiments, the optical device **102** may include optical components that can be selectively activated (mechanically or electrically moved into and out of the light path) to selectively direct at least a portion of received light toward one or more sensors of the circuitry **120**.

[0033] In some embodiments, the objective lens system **118** may include one or more apertures configured to receive light associated with the view area. In one possible embodiment, light from a view area may be received through a single aperture and provided as a direct view image to the viewing lens **116**. In a night view mode or in a fused image mode, at least a portion of the received light (such as received light within a particular range of frequencies) may be directed toward an optical sensor by moving a splitter or mirror device into the light path to redirect the portion of the received light from the light path toward the optical sensor. Other embodiments are also possible.

[0034] In an alternative embodiment, the objective lens system **118** may include multiple apertures. In this embodiment, the light received by a first aperture may be directed toward a first sensor (such as a sensor configured to receive reflected laser light for a laser range finder circuit). The light received by a second aperture may be provided to the viewing lens **116** through a direct view optical path and at least a portion of the received light through the second aperture may be selectively directed toward a sensor, such as a low-light or infrared sensor, by moving a splitter or mirror into the direct view optical path. In a particular embodiment, the splitter or mirror may be moved into the direct view optical path in response to an input received from a user-selectable element (such as a button), or automatically in response to ambient light measurements falling below a low light threshold. Other embodiments are also possible.

[0035] In the illustrated embodiment of FIG. **1**, the optical device **102** is implemented as a firearm scope. However, it should be appreciated that the multiple modes (day view, night view, and optionally fused image view modes) can be implemented in any type of optical device, including a firearm scope, a spotting scope, a telescope, a camera, a pair of binoculars, or another optical device.

[0036] While the optical device **102** has a narrow and elongate profile, it should be appreciated that other form factors and other implementations are also possible. An example of an optical device with a different form factor is described below with respect to FIG. **2**.

[0037] FIG. **2** depicts a perspective view of a firearm system **200** including an optical device **202** with selective night vision functionality, in accordance with certain embodiments of the present disclosure. The optical device **202** may be an alternative embodiment (alternative form factor) of the optical device **102** in FIG. **1**. In this example, the optical device **202** may be mounted to a firearm **204**, which may include a muzzle **206**, a magazine **208**, a grip **210**, a trigger assembly **212**, and a stock **214**. In this example, the trigger assembly **212** may include at least one user-selectable button **213**, which may be accessed by the user to initiate and optionally control one or more functions, such as a target selection and tagging function. In a particular embodiment, the trigger assembly **212** and the user-selectable button **213** may be electrically coupled to the optical device **202**.

[0038] In the illustrated example, the optical device **202** may include a plurality of apertures **218**, **220**, **224**, and **226**, at least some of which may be configured to receive light associated with a view area of the optical device **202**. The optical device **202** may include various optical components configured to provide a direct image view. Further, the optical device **202** may include circuitry, generally indicated at **220**, which may be configured to selectively provide a digital image view in a night view mode or a combination of a direct view image and a digital image in a fused image view mode. In an example, in response to selecting the user-selectable button on the optical device **202**, a splitter or mirror element may be moved into the direct view light path to direct at least a portion of the received light toward one or more optical sensors. In one embodiment, the circuitry **220** may control an actuator to move the splitter or mirror into the light path. In another embodiment, the user-selectable element may include a lever or switch that may be coupled to the mirror or splitter and that may cause the mirror or splitter to move into the direct view light path. Other embodiments are also possible.

[0039] In the illustrated example, the optical device **202** may include a first aperture **218** to receive light associated with a view area. The first aperture **218** may be aligned with one or more optical components configured to focus and direct the received light toward the viewing lens **216**. The optical device **202** may also include a second aperture **224** that is transparent to a focused beam (such as a laser beam), allowing the focused beam to be directed toward the view area. The optical device **202** may include at least one additional aperture **222** and **226** to receive light reflected by one or more objects within the view area. The circuitry **220** may include a laser rangefinder circuit including driver circuitry configured to control the laser range finder to direct the focused beam toward the view area, optical sensors configured to receive the reflected light, and processing circuitry configured to determine a range to an object within the view area. The circuitry **220** may also include one or more optical sensors configured to receive light within a selected frequency range via one of the first aperture **218** or the other apertures **222** and **226**.

[0040] In some embodiments, the optical device **202** may include one or more optical elements, which may be mechanically or electrically controlled to move into or out of a direct view light path in order to selectively direct the received light from the first aperture **218** toward an optical sensor, to selectively direct image data from a display toward the viewing lens **216**, to superimpose a reticle onto the direct view image within a first focal plane, or any combination thereof.

[0041] FIG. **3** depicts a block diagram of a system **300** including a portion of an optical device with selective night vision functionality accessible by a user-accessible mechanical switch, in accordance with certain embodiments of the present disclosure. The system **300** may represent an implementation of the optical device **102** of FIG. **1** or the optical device **202** of FIG. **2**. The system **300** may include a circuit **302** coupled to one or more user-selectable elements **304**, which may include mechanical buttons, levers, knobs, or electrical buttons, bi-stable switches, rocker switches, other elements, or any combination thereof. The circuit **302** may be an embodiment of the circuit **120** in FIG. **1** or the circuit **220** in FIG. **2**.

[0042] The system **300** may further include an objective lens **306** configured to receive and focus light along an optical path **340** toward a viewing lens **308**. The system **300** may also include switchable optics **342** that can be controlled by a user-accessible switch **344** to move into or out of the optical path **340** to direct at least a portion of the light from the optical path **340** toward one or more optical sensors **310** of the circuit **302**. The system **300** can also include a light-splitting element **348** configured to direct image data **350** from a display interface **316** toward the viewing lens **308** as indicated by the dashed line **352**.

[0043] The circuit **302** can include one or more optical sensors **310** configured to receive light from the optical path **340** (or optionally directly from the view area). The circuit **302** can further include a field programmable gate array (FPGA) **312** or other data processing circuit coupled to the optical sensors **310**. The circuit **302** may further include a memory **314** that is coupled to the FPGA **312** and configured to store data and instructions. The circuit **302** may also include a speaker **317** and a display interface **316**, both of which are coupled to the FPGA **312**. Further, the circuit **302** may include a control circuit **318** coupled to the FPGA **312**.

[0044] The control circuit **318** may include a digital signal processor (DSP) **330** and an associated memory **332**. The DSP **330** may be coupled to the FPGA **312** and may also be coupled to a microphone **328** through an analog-to-digital converter **329** to receive audio data. Further, the DSP **330** may be coupled to a microcontroller unit (MCU) **334**.

[0045] The control circuit **318** may also include the MCU **334** and an associated memory **336**. The MCU **334** may be coupled to the FPGA **312** and to an input interface **322**, which may be configured to receive signals from the one or more user-selectable elements **304**. The MCU **334** may also be coupled to one or more sensors **321**, such as environmental sensors (temperature, air pressure, altitude, humidity, wind, and so on), orientation sensors (incline, direction, motion, and so on), other sensors, or any combination thereof. Additionally, the MCU **334** may be coupled to one or more transceivers **338** to send and receive data, sound, images, or any combination thereof to a remote device through a network communications link. In some embodiments, the circuit **302** may also include one or more interfaces, such as Universal Serial Bus (USB) ports configured to receive a USB connector and to communicate with an external device through a USB cable. The MCU **334** may also be coupled to an input/output (I/O) interface **335**, which may be coupled to an external circuit, such as a circuit within the trigger assembly **112** of FIG. **1** or the trigger assembly **212** of FIG. **2**. Further, the MCU **334** may be coupled to a range finder circuit **337** (such as a laser range finder circuit, light detection and ranging (LIDAR) circuit, or another range finder circuit).

[0046] In some embodiments, the speaker **317** and microphone **328** may be incorporated in a headset that is coupled to circuitry **120** through an input/output interface (not shown). The headset may be worn by a user during operation.

[0047] In some embodiments, FPGA **312** may be configured to process image data and other data from optical sensors **122**. FPGA **312** can process the image data to enhance image quality through digital focusing and gain control. Further, FPGA **312** can perform image registration and stabilization. Additionally, the FPGA **312** may integrate information received from the DSP **330**, the MCU **334**, or both to produce image data, which may be projected toward the light-splitting element **348**, which may superimpose or otherwise direct the image data toward the viewing lens **308**.

[0048] DSP **330** may execute instructions stored in memory **332** to process audio data from microphone **328** or image data from FPGA **312**. In an example embodiment of an optical device that is a firearm scope, as a target moves within the view area, DSP **330** and the FPGA **312** may cooperate to perform target tracking and to apply a visual marker to a selected target within the image data. At least a portion of the image data and the visual marker may be provided to the display interface **316**, which may be configured to project image data toward a light-splitting element **348** (or other optical element) configured to provide image data that is visible to the viewing lens **308**.

[0049] In some embodiments, the DSP **330**, the FPGA **312**, or both may be configured to combine image data obtained from multiple optical sensors **310** and to provide the combined images to display interface **316**. For example, if the system **300** is focused on a dark environment with isolated lighting, direct image data may be combined with information from the optical sensors **310** to provide night vision enhancements for the low-light portions of the view area. Image data from different types of optical sensors **310** (such as infrared sensors, low-light sensors, and other sensors) may be combined, fused, or otherwise processed to improve image quality or achieve a desired characteristic or look for an image that may be presented to the viewing lens **308**. In a particular example, the FPGA **312** may cooperate with at least one of the DSP **330** and the MCU **334** to generate a heads-up display (HUD) that can be projected by the display interface **316** to be superimposed over a view area image directed toward the viewing lens **308**. The HUD may display information such as a target range, ambient conditions (such as temperature, incline, wind speed, wind direction, humidity, other information, or any combination thereof), image data, other data, or any combination thereof.

[0050] In some embodiments, the FPGA **312** may be configured to cooperate with MCU **334** to mix the video data with reticle information and target tracking information (from DSP **330**) and provide the resulting image data to the display interface **316**. In some embodiments, the MCU **334** may select one or more of the optical sensors **310**, to receive data associated with a particular visible frequency, which data may be processed to produce image data for presentation via the display interface **316**.

[0051] In some embodiments, the FPGA **312** or the MCU **334** may compare illumination data from optical sensors **122** to a threshold value, and if the illumination data falls below

a threshold, the FPGA **312** or the MCU **334** may alter the operating mode of the optical device, such as switching from a day view image mode to a night view image mode or from either a day view image or night view image mode to a fused image mode. For example, in a day view image mode, the optical sensors **310** may be disabled, or the switchable optics **342** may be switched out of the light path **340** or otherwise disabled so as to not direct light from the view area toward the optical sensors **310**.

[0052] In some embodiments, if the measured light falls below a threshold or in response to an input received from the user-selectable element **304**, the user-accessible switch **344**, or any combination thereof, the MCU **334** may be configured to receive light **346** from the view area at the optical sensors **310**. In an example, the user-accessible switch **344** may be configured to mechanically move the switchable optics **342** into the light path **340**, causing at least a portion of the light to be redirected toward the optical sensors **310**. In another example, the user-accessible switch **344** may be coupled to the MCU **334**, which may be configured to control an actuator to move the switchable optics **342** into the light path **340** (or out of the light path **340** when in a day view mode). The optical sensors **310** may generate signal data that is proportional to the received light, and may provide the signal data to the FPGA **312**. In one mode, the FPGA **312** may cooperate with the DSP **330** and the MCU **334** to provide image data to the viewing lens **308** instead of or combined with the direct view provided by the light path **340**.

[0053] In the illustrated example, the user-accessible switch **344** may be accessed by a user to mechanically switch the switchable optics **342** into or out of the light path **340**. The user-accessible switch **344** may include a lever accessible by a user to mechanically adjust the switchable optics **342**. In an example, the switchable optics **342** may include a mirror element that can be pivoted into or out of alignment with the light path **340** based on a position of the user-accessible switch **344**. Other embodiments are also possible.

[0054] While FIG. **3** depicts an example embodiment of a circuit **302**, at least some of the operations of circuit **302** may be controlled using one or more general purpose controllers or processors executing programmable instructions. Further, the circuit **302** may include additional or fewer elements, certain elements may be combined or separated into additional modules or circuits, and processes attributed to one component may be executed by another component without departing from the present disclosure. Other variations are also possible.

[0055] FIG. **4** depicts a block diagram of a system **400** including a portion of an optical device with selective night vision functionality that can be activated by a user-accessible button, in accordance with certain embodiments of the present disclosure. The system **400** includes a circuit **402**, which may include all of the elements of the circuit **302** in FIG. **3**, and which may include may include one or more actuators **409**. The one or more actuators **409** may be responsive to at least one signal from the MCU **334** to move one or more optical sensors **310** into the optical path **340** along a movable path, generally indicated at **411**. Alternatively, the actuators **409** may be configured to pivot a switchable element **342** (such as a mirror or a light splitting element) into or out of the light path.

[0056] In a particular embodiment, the optical sensors **310** may be selectively activated by mechanically moving the optical sensors **310** into the light path **340** or by moving the switchable element **342** into the light path **340** to redirect at least a portion of the received light toward the optical sensors **310**. In other embodiments, rather than moving the optical sensors **310**, a light-splitting element may be moved along the path **411** into and out of the light path **340**. Additionally, in other embodiments, the sensor could remain stationary, and the display or the mirror or light-splitting element for the display could be moved.

[0057] In a day view image mode, the optical sensors **310** or the light-splitting element may be moved by the actuators **409** to a position that is removed from the light path **340**. In a nigh view image mode or a fused image mode, the optical sensors **310** or the light-splitting element may be moved by the actuators **409** to a position to receive at least a portion of the light from the view area.

[0058] It should be appreciated that the optical device can be configured to provide a night view image mode or a fused image mode based on received light. The mechanical structure that can be selectively enabled, actuated, or otherwise adjusted to enable the night view or fused image modes can include a variety of different configurations and component elements. FIGS. **5-11** depict some of the possible configurations of the optical elements of an optical scope. The reference numbers are reused in the following figures to indicate the same or similar elements.

[0059] FIG. **5** depicts a diagram of a portion of an optical device **500** with a single actuatable element configured to enable selective night vision functionality, in accordance with certain embodiments of the present disclosure. The optical device **500** may be an embodiment of the optical device **102** in FIG. **1**, the optical device **202** in FIG. **2**, the optical device of the system **300** in FIG. **3**, or the optical device of the system **400** in FIG. **4**.

[0060] The optical device **500** may include objective lenses **502** configured to receive light from a view area and to focus the received light toward a first focal plane **504**, which may include a mechanical wire, printed, etched, or display-projected reticle. The optical device **500** may further include erector lenses **506**, which receive the focused light from the objective lenses **502** and which reorient the focused light. The optical device **500** may further include a display **510** (or display interface) configured to provide image data toward an adjustable mirror **514** through display optics **512**. The adjustable mirror **514** may be configured to direct the image data from the display **510** toward the viewing lens **520** through the focusing lenses **518**. The adjustable mirror **514** may also direct light from the view area toward one or more sensors **516**. In some embodiments, the adjustable mirror **514** may be pivoted into or out of the light path using the actuator **409** or in response to selection of a user-selectable element **344**. Other embodiments are also possible.

[0061] It should be appreciated that the adjustable mirror **514** may be rotated or otherwise moved into or out of the focal plane, depending on the operating mode. Further, the adjustable mirror **514** could be partially transmissive to certain light frequencies and may be configured to direct light from the display **510** to superimpose the display data onto the direct view image. In a night view image mode or a fused image mode, a processor circuit (such as an FPGA, a DSP, an MCU, or any combination thereof) may process image data captured by the one or more sensors **516** to

produce image data, which may be projected by the display **510** through the display optics **512** and onto the surface of the adjustable mirror **514**.

[0062] In some embodiments, in a day view image mode, the adjustable mirror **514** may be rotated or moved out of the light path (either mechanically based on the user-selectable switch **344** or electrically via actuator **409**). In other embodiments, in the day view image mode, the adjustable mirror **514** may be rotated or moved (either mechanically based on the user-selectable switch **344** or electrically via actuator **409**) so that light projected by the display **510** is not reflected toward the focusing lenses **518**. Other embodiments are also possible.

[0063] The one or more sensors **516** may include optical sensors configured to generate an electrical signal proportional to the received light at particular frequencies. For example, the sensors **516** can include low-light sensors, infrared sensors, other types of optical sensors, or any combination thereof.

[0064] It should be appreciated that the objective lenses **502** may be examples of the object lens **118** of FIG. **1**, **218** of FIG. **2**, **306** of FIG. **3**, or **406** of FIG. **4**. Further, the viewing lens **520** may be an example of the viewing lens **116** of FIG. **1**, **216** of FIG. **2**, **308** of FIG. **3**, or **408** of FIG. **4**. Other embodiments are also possible.

[0065] FIG. **6** depicts a diagram of a portion of an optical device **600** with a pair of light splitting elements configured to enable selective night vision functionality, in accordance with certain embodiments of the present disclosure. The optical device **600** may be an embodiment of the optical device **102** in FIG. **1**, the optical device **202** in FIG. **2**, the optical device of the system **300** in FIG. **3**, or the optical device of the system **400** in FIG. **4**. The optical device **600** includes a light-splitting element (mirror device **602** between the erector lenses **506** and the adjustable mirror **514**. The mirror device **602** may direct light from the erector lenses **506** toward one or more sensors **616**, and may be partially transmissive to some frequencies of light.

[0066] In this example, in a day view image mode, the one or more sensors **616** may be turned off (or signals from the sensors **616** may be ignored by the processing circuitry). In a night view image mode or a fused image mode, the sensors **616** may be activated to convert light from the view area into an electrical signal proportional to the received light.

[0067] In the illustrated example, the mirror device **602** may include a mirror surface (such as a prismatic surface) to direct light toward the sensors **616**. In some embodiments, the mirror surface may be electrically activated.

[0068] FIG. **7** depicts a diagram of a portion of an optical device **700** with an electrically controllable light splitting element configured to enable selective night vision functionality, in accordance with certain embodiments of the present disclosure. In this example, the mirror device **602** includes an electrically activated surface **704**, which may be responsive to a signal from at least one of the FPGA or MCU of the optical device **700** to electrically activate the surface **704** to selectively reflect light toward the sensors **616** and to direct light from the display **510** toward the viewing lens **520**.

[0069] In a day view image mode, the electrically activated surface **704** may be disabled such that light from the display **510** is not reflected toward the viewing lens **520**. Further, when the surface is disabled or inactive, light from the viewing area is not reflected toward the sensors **616**. In a night view image mode or a fused image mode, the FPGA or MCU of the optical device **700** may process data received from the one or more sensors **616** and may produce image data that can be projected onto the electrically activated surface **704** of the mirror device **602**. Other embodiments are also possible.

[0070] FIG. **8** depicts a diagram of a portion of an optical device **800** with a pair of light splitting elements, at least one of which may be an electrically controllable light splitting element, configured to enable selective night vision functionality, in accordance with certain embodiments of the present disclosure. In this embodiment, a first mirror device **602** may be partially transmissive to some frequencies of light and may be positioned between the erector lenses **506** and the viewing lens **520** to direct a portion of the received light toward the sensors **616**. The optical device **800** may further include a second mirror device **802** with an electrically activated surface **804** may be positioned between the first mirror device **802** and the view lens **520**. The second mirror device **802** may be configured to direct light projected by the display **510** toward the viewing lens **520**.

[0071] FIG. **9** depicts a diagram of a portion of an optical device **900** with a pair of light splitting elements configured to enable selective night vision functionality, in accordance with certain embodiments of the present disclosure. The optical device **900** includes a first mirror device **602** between the erector lenses **506** and the viewing lens **520**. The first mirror device **602** may direct light toward one or more sensors **616**. The optical device **900** may further include a second mirror device **902** between the mirror device **602** (which may be partially transmissive to some frequencies of light) and the viewing lens **520**. The second mirror device **902** may include a light-splitting surface **904**, which may be configured to direct image data from the display **510** toward the viewing lens **520** in conjunction with the light from the view area. This light-splitting surface is partially transmissive to certain frequencies of light.

[0072] FIG. **10** depicts a diagram of a portion of an optical device **1000** with a light splitting element and including a transmissive display, in accordance with certain embodiments of the present disclosure. The optical device **1000** may include a mirror device **602** (which may be partially transmissive to some frequencies of light) between the erector lens **506** and the viewing lens **520**. The mirror device **602** may direct a portion of the light from the view area toward the one or more sensors **616**. The optical device **1000** may also include a transmissive display between the mirror device **602** and the viewing lens **520**. The display could be a liquid crystal display (LCD), organic light-emitting diode (OLED) display, or another type of display.

[0073] In a particular example, the transmissive display may be configured to selectively superimpose image data on the direct view image of the field of view. Other embodiments are also possible.

[0074] FIG. **11** depicts a diagram of a portion of an optical device **1100** with a light-splitting element (mirror device **602**) and including a partially reflective screen **1114**, in accordance with certain embodiments of the present disclosure. The mirror device **602** (which may be partially transmissive to some frequencies of light) may direct a portion of the light from a view area toward the one or more sensors **616**. A partially reflecting screen **1114** may be positioned between the mirror device **602** and the viewing lens **520**. The display **510** may project image data through display optics

512 onto the partially reflecting screen **1114**. Thus, the projected image data and the direct view image can be presented to the viewing lens **520**.

[0075] In the above discussion, the reflective surfaces of the mirror devices may be configured to reflect light of selected frequencies and to allow light of other frequencies to pass through. In some embodiments, the reflective surfaces may be electrically controlled to selectively reflect light toward the sensors or to direct light from the display to the viewing lens. Further, in some embodiments, the reflective surfaces may be actuated into the light path. In other embodiments, the sensors and the display may be selectively activated, depending on the operating mode. In this example, the sensors and the display may be inactive in a day view image mode, and the sensors and the display may be active in a night view image mode or a fused image mode.

[0076] FIG. **12** depicts a block diagram of a method **1200** of switching between an optical device having a day view optical functionality and selectable a night vision functionality, in accordance with certain embodiments of the present disclosure. At **1202**, the method **1200** may include receiving light associated with a view area. The light may be received through a single aperture or through multiple apertures.

[0077] At **1204**, the method **1200** can include selectively directing at least a portion of the received light toward one or more of the optical sensors according to a selected operating mode. The light may be selectively directed toward the optical sensors using electrically controlled mirror elements, fixed mirror elements, partially reflective mirror elements, other types of mirror elements, or any combination thereof. In a particular example, the mirror elements or light-splitting elements may be switched into or out of a light path, depending on the operating mode. In another example, a mirror element may be electrically controlled to be at least partially transmissive or reflective in response to an electrical signal. Other embodiments are also possible.

[0078] At **1206**, the method **1200** may be configured to provide at least one of the received light and data related to the portion of the received light to a viewing lens according to the selected operating mode. In a day view image mode, the received light may or may not be directed toward one or more sensors. Electrically controlled surfaces may be inactive, allowing direct view image light to pass through without reflection. In some embodiments, the mirror elements may be moved so that they do not reflect the light. In other embodiments, the sensor elements and a display element may be controlled to selectively capture optical data and to selectively provide image data from the FPGA to a surface that can direct the image data toward a viewing lens.

[0079] In a night image view or a fused image view mode, the mirror elements may direct light toward sensors that are active, and the display may project image data, which may be directed toward the viewing lens. Other embodiments are also possible.

[0080] FIG. **13** depicts a diagram of a portion of an optical device **1300** including a light-splitting element that can be mechanically adjusted into and out of a light path, in accordance with certain embodiments of the present disclosure. The optical device **300** may include the circuit **402** coupled to an actuator **409** that may be configured to adjust the mirror device **602** from a first state **1304** to a second state **1306** by causing the mirror device **602** to pivot about the axis **1302**. The optical device **1300** may further include a stop **1308** configured to engage a portion of the mirror device **602** to ensure that the mirror device **602** is positioned correctly in the second state **1306**. Other embodiments are also possible.

[0081] In some embodiments, the circuit **402** may cause the mirror device **602** to pivot about the axis **1302**. In an example, in a day view mode, the circuit **402** may control the actuator **409** to maintain the mirror device **602** in the first state **1304** (as shown in phantom). In a night view for second mode, the circuit **402** may control the actuator **409** to pivot the mirror device **602** about the axis **1302** into a second position or second state **1306** against the stop **1308**, causing the mirror device **602** (which may be partially transmissive to at least some frequencies of light) to direct at least a portion of the light toward the sensors **616**.

[0082] The above circuits, systems, devices, and methods may be directed to firearm scopes, spotting scopes, telescopes, binoculars, cameras, other optical devices, or any combination thereof. Similarly, steps of the methods may be performed by other device elements than those described, or some elements may be combined or eliminated without departing from the scope of the present disclosure.

[0083] In conjunction with the systems, methods, and devices described above, an optical device may include at least one light-splitting element (such as a mirror, a prism, and the like) configured to selectively direct a portion of received light from a view area toward one or more optical sensors. The light-splitting element may be electrically actuated, mechanically actuated, or otherwise adjusted to selectively direct light toward the sensors according to a selected mode of operation.

[0084] While the present invention has been described with reference to preferred embodiments, workers skilled in the art will recognize that changes may be made in form and detail without departing from the scope of the present disclosure. In accordance with various embodiments, the methods described herein may be implemented as one or more software programs running on a computer processor or controller. Dedicated hardware implementations including, but not limited to, application specific integrated circuits, programmable logic arrays, and other hardware devices can likewise be constructed to implement the methods described herein. Further, the methods described herein may be implemented as a computer readable storage device or memory device including instructions that, when executed, cause a processor to perform the methods.

[0085] The illustrations of the embodiments described herein are intended to provide a general understanding of the structure of the various embodiments. The illustrations are not intended to serve as a complete description of all of the elements and features of apparatus and systems that utilize the structures or methods described herein. Many other embodiments may be apparent to those of skill in the art upon reviewing the disclosure. Other embodiments may be utilized and derived from the disclosure, such that structural and logical substitutions and changes may be made without departing from the scope of the disclosure. Moreover, although specific embodiments have been illustrated and described herein, it should be appreciated that any subsequent arrangement designed to achieve the same or similar purpose may be substituted for the specific embodiments shown.

[0086] This disclosure is intended to cover any and all subsequent adaptations or variations of various embodi-

ments. Combinations of the above embodiments, and other embodiments not specifically described herein, will be apparent to those of skill in the art upon reviewing the description. Additionally, the illustrations are merely representational and may not be drawn to scale. Certain proportions within the illustrations may be exaggerated, while other proportions may be reduced. Accordingly, the disclosure and the figures are to be regarded as illustrative and not restrictive.

What is claimed is:

1. An apparatus comprising:

an optical device configured to provide a day view image mode and a night view image mode, the optical device including:

a plurality of lenses including an objective lens to receive light from a viewing area and including a viewing lens through which a user may perceive at least a portion of the received light, the plurality of lenses configured to focus the received light along a light path from the objective lens to the viewing lens;

an optical element disposed between the aperture and the viewing lens and configured to selectively redirect at least a portion of the light from the light path;

a control circuit including one or more sensors, at least one processor circuit, and a display interface, the control circuit configured to selectively disable at least one of the display interface and the one or more sensors in the day view image mode and to selectively enable at least one of the display interface and the one or more sensors in a night view image mode.

2. The apparatus of claim **1**, wherein the optical element comprises an electrically controllable reflective surface configured to redirect the portion of the light toward the one or more sensors in response to an electrical signal.

3. The apparatus of claim **1**, wherein the optical element comprises an adjustable mirror configured to mechanically switch into the light path to redirect the portion of the light toward the one or more sensors.

4. The apparatus of claim **3**, wherein the optical element is further configured to direct image data from the display interface toward the view lens in line with a direct image view from the objective lens.

5. The apparatus of claim **1**, wherein the one or more optical sensors are configured to generate an electrical signal proportional to selected light frequencies within the at least the portion.

6. The apparatus of claim **5**, wherein the one or more optical sensors include at least one of a complementary metal oxide semiconductor (CMOS) array, a charge-coupled device (CCD) array, an avalanche photodiode (APD) array, a cooled or uncooled infrared detector array, a short-wave infrared (SWIR) array, a midwave infrared (MWIR) sensor, and a long wave infrared sensor (LWIR).

7. The apparatus of claim **1**, further comprising a first focal plane including a reticle.

8. The apparatus of claim **1**, further comprising a firearm coupled to the optical device, the firearm including a trigger assembly electrically coupled to the at least one processor circuit.

9. An apparatus comprising:

an optical device configured to provide a day view image mode and a night view image mode, the optical device including:

an optics assembly configured to receive light from a view area;

a control circuit including one or more sensors and a display interface, the control circuit configured to receive a mode selection input and to selectively enable at least one of the display interface and the one or more sensors in response to the mode selection input indicating a night view image mode; and

an optical element responsive to a signal from the control circuit to direct at least a portion of the light toward the one or more sensors.

10. The apparatus of claim **9**, wherein the one or more sensors are configured to generate an electrical signal proportional to selected light frequencies within the at least the portion of the light.

11. The apparatus of claim **9**, wherein the optical element comprises an electrically controllable reflective surface configured to redirect the at least the portion of the light toward the one or more sensors in response to the signal.

12. The apparatus of claim **9**, wherein the optical element comprises an adjustable mirror configured to mechanically switch into a light path to redirect the at least the portion of the light toward the one or more sensors in response to the signal.

13. The apparatus of claim **12**, wherein:

the optics assembly includes an objective lens and a viewing lens; and

the optical element is further configured to direct image data from the display interface toward the view lens in line with a direct image view from the objective lens in the night view image mode.

14. The apparatus of claim **9**, wherein the one or more optical sensors are configured to generate an electrical signal proportional to selected light frequencies within the at least the portion.

15. The apparatus of claim **14**, wherein the one or more optical sensors include at least one of a complementary metal oxide semiconductor (CMOS) array, a charge-coupled device (CCD) array, an avalanche photodiode (APD) array, a cooled or uncooled infrared detector array, a short-wave infrared (SWIR) array, a midwave infrared (MWIR) sensor, and a long wave infrared sensor (LWIR).

16. The apparatus of claim **9**, further comprising a firearm coupled to the optical device, the firearm including a trigger assembly electrically coupled to the at least one processor circuit.

17. An apparatus comprising:

an optical device including:

an optics assembly configured to receive light from a view area through an objective lens and to focus the light toward a viewing lens;

one or more optical sensors;

an optical element configured to selectively direct at least a portion of the light toward the one or more optical sensors; and

a control circuit configured to receive a mode selection input and, when the mode selection input indicates a day view image mode, to selectively disable the one or more sensors and to control the optical element to not redirect the at least the portion to the one or more optical sensors, and, when the mode selection input indicates a night view image mode, the control circuit configured to selectively enable the one or more sensors and to control the optical element to

direct the at least the portion of the light toward the one or more optical sensors.

18. The apparatus of claim **17**, wherein the optical element comprises an electrically controllable reflective surface configured to redirect the at least the portion of the light toward the one or more sensors in response to the signal.

19. The apparatus of claim **17**, wherein the optical element comprises an adjustable mirror configured to mechanically switch into a light path to redirect the at least the portion of the light toward the one or more sensors in response to the signal.

20. The apparatus of claim **17**, further comprising:

a processor coupled to the one or more sensors and configured to generate image data based on signals from the one or more sensors;

a second optical element in a focal plane of the viewing lens; and

a display interface coupled to the processor and configured to provide the image data to the second optical element.

* * * * *