US 20230365280A1

(19) United States
(12) Patent Application Publication
Deemyad et al.

(10) Pub. No.: US 2023/0365280 A1
(43) Pub. Date: Nov. 16, 2023

(54) **LIGHTWEIGHT FOLDABLE ROBOTIC ARM FOR DRONES**

(71) Applicant: **IDAHO STATE UNIVERSITY**, Pocatello, ID (US)

(72) Inventors: **Taher Deemyad**, POCATELLO, ID (US); **Parker Wegrowski**, POCATELLO, ID (US); **Jacob Lemrick**, POCATELLO, ID (US); **Wesley Thomas**, POCATELLO, ID (US); **Kyler Bingham**, POCATELLO, ID (US); **Anish Sebastian**, Idaho Falls, ID (US)

(21) Appl. No.: **18/316,532**

(22) Filed: **May 12, 2023**

Related U.S. Application Data

(60) Provisional application No. 63/341,759, filed on May 13, 2022, provisional application No. 63/341,756, filed on May 13, 2022, provisional application No. 63/341,744, filed on May 13, 2022.

Publication Classification

(51) **Int. Cl.**

B64U 20/70	(2006.01)
B64U 10/14	(2006.01)
B25J 18/02	(2006.01)
B25J 9/12	(2006.01)
B25J 9/10	(2006.01)

(52) **U.S. Cl.**
CPC ***B64U 20/70*** (2023.01); ***B25J 9/107*** (2013.01); ***B25J 9/123*** (2013.01); ***B25J 9/126*** (2013.01); ***B25J 18/025*** (2013.01); ***B64U 10/14*** (2023.01)

(57) **ABSTRACT**

An unmanned aerial vehicle includes a body with an arm mounted to a side of the body. The unmanned aerial vehicle also includes an actuator coupled to the arm. The actuator is configured to move the arm between a retracted position and an extended position. The actuator moves within a single degree of freedom to move the arm between the retracted position and the extended position.

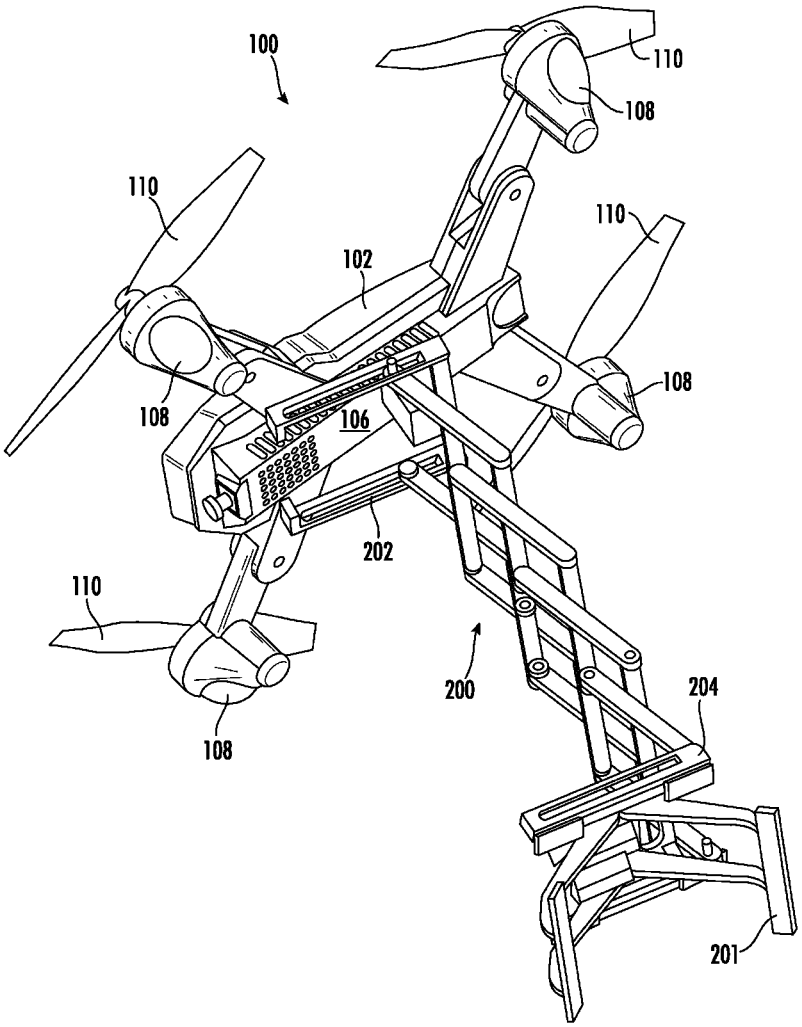

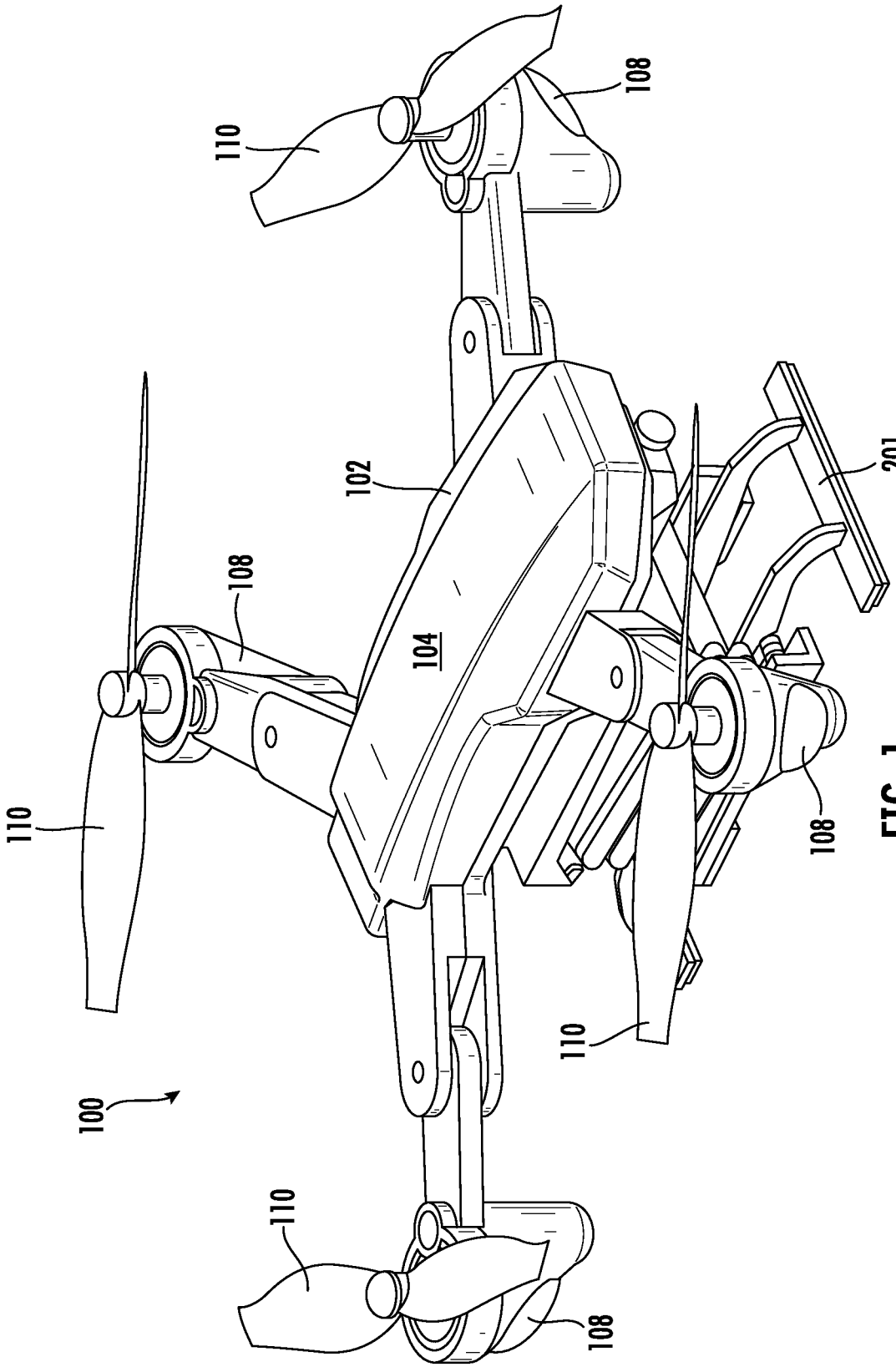

FIG. 1

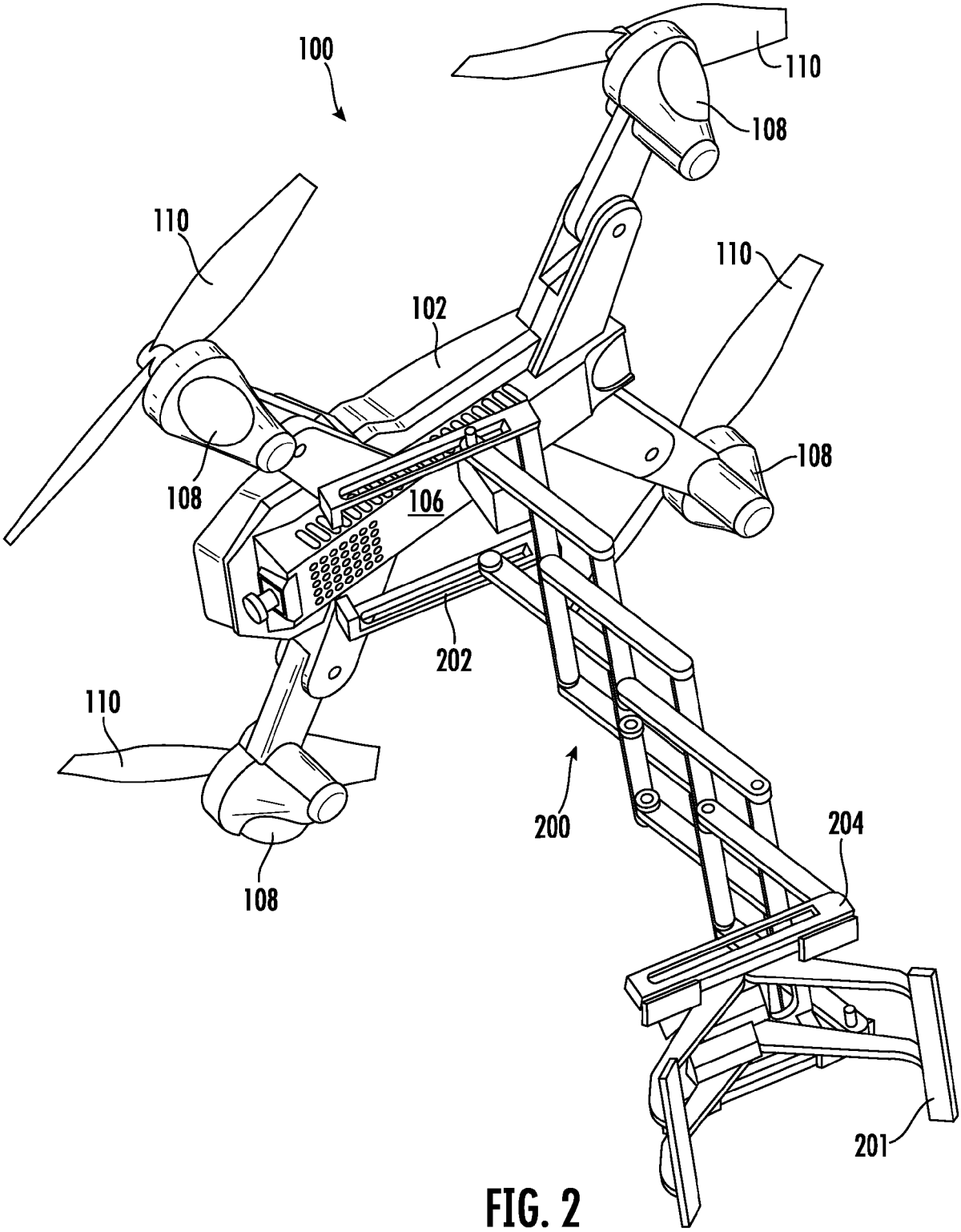

FIG. 2

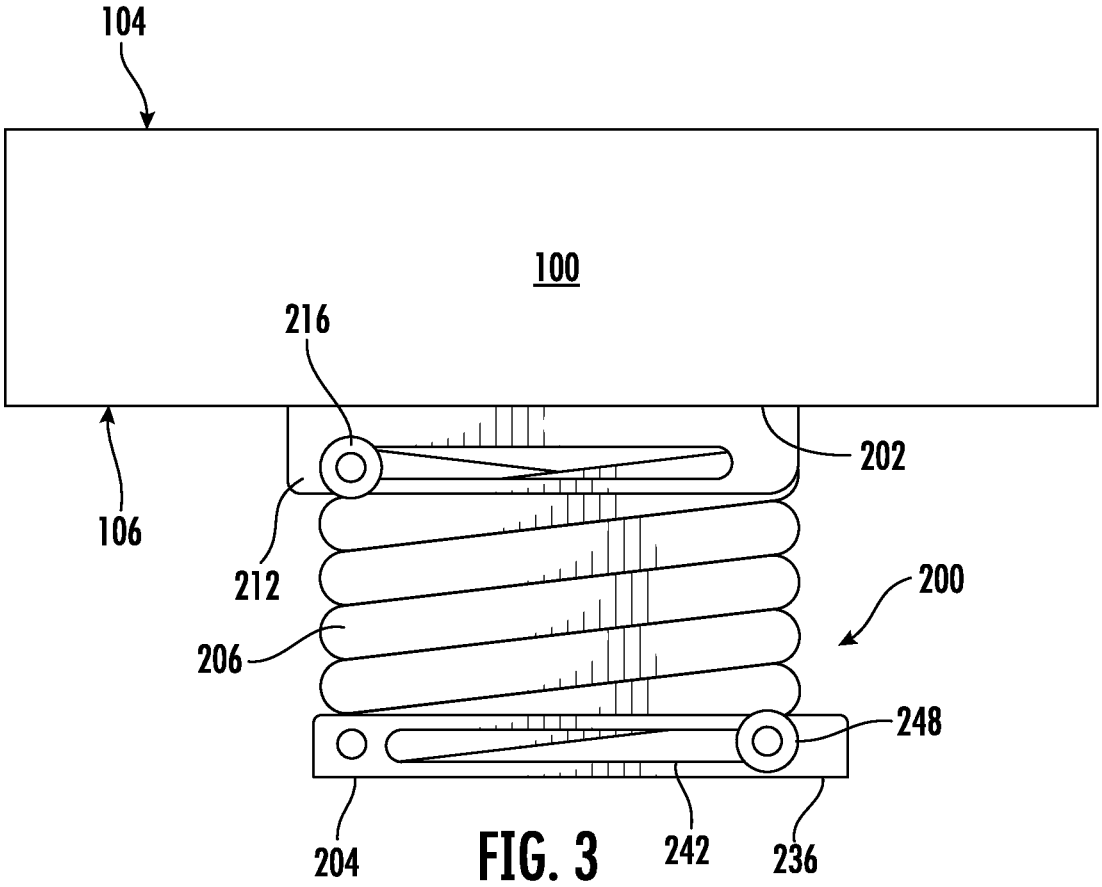

FIG. 3

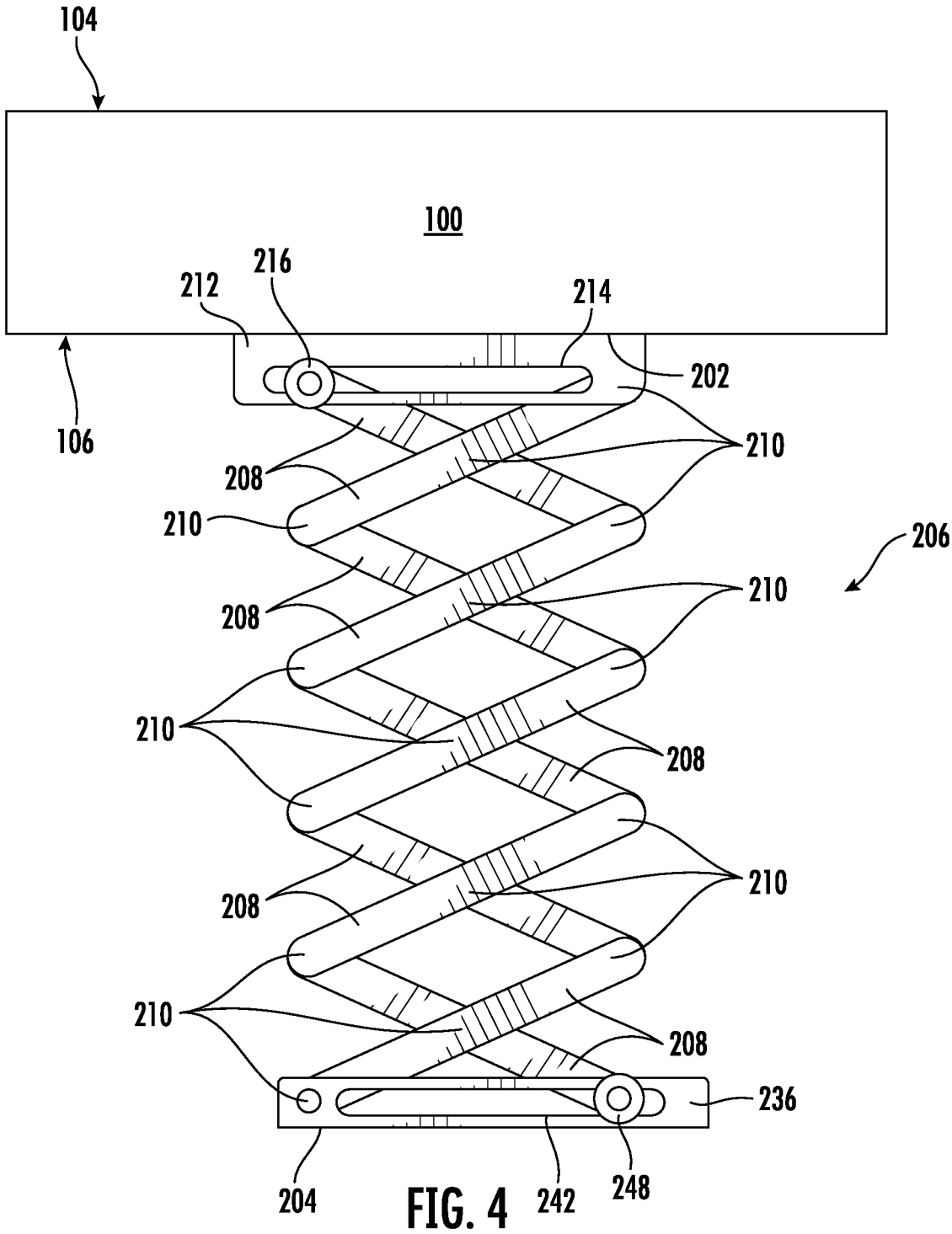
104
100
216
212
214
202
106
210
208
210
206
208
210
210
208
208
210
210
208
236
204
242
248

FIG. 4

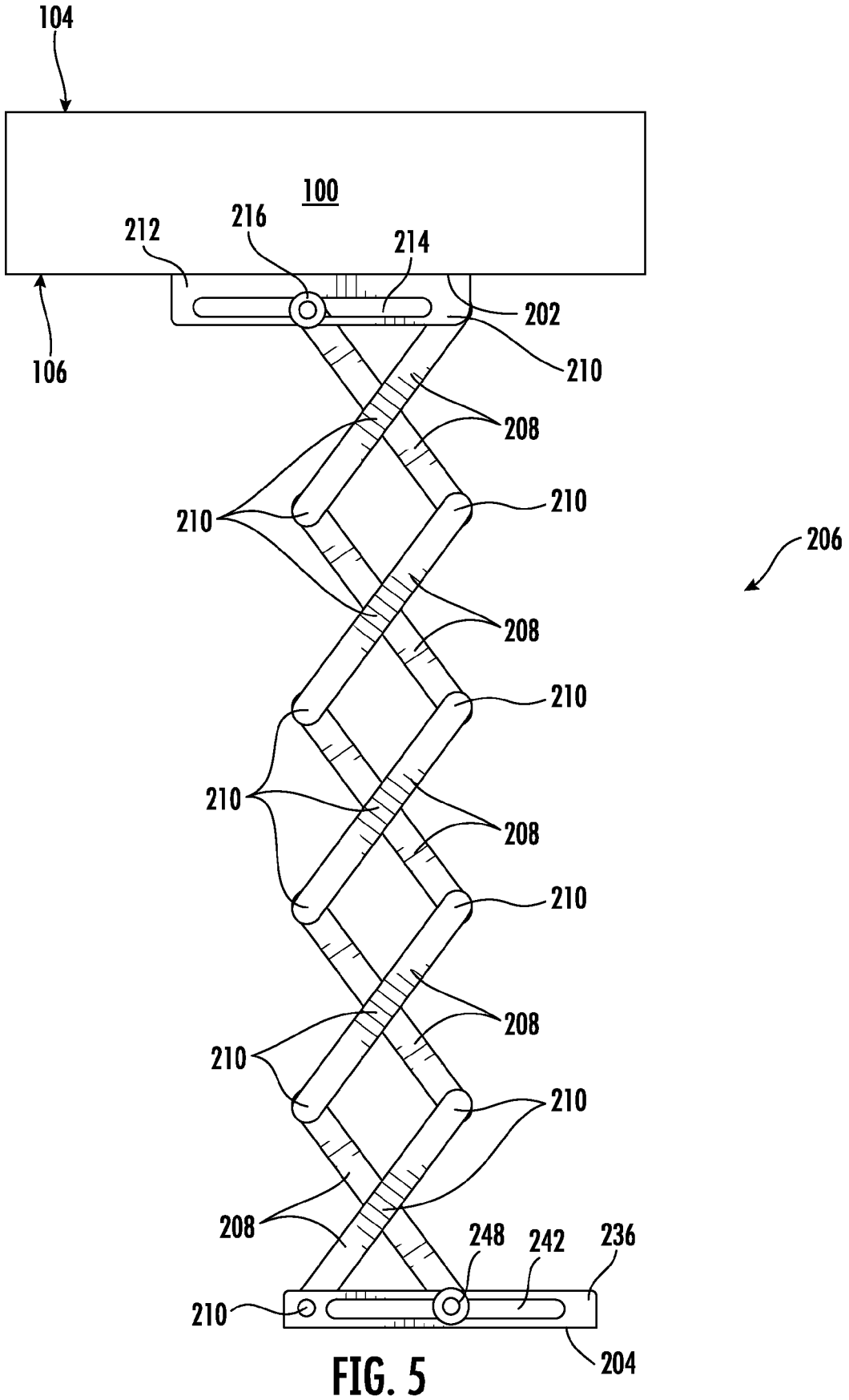
104
100
212
216
214
202
106
210
208
210
210
206
208
210
210
208
210
208
210
210
208
248
242
236
210
204

FIG. 5

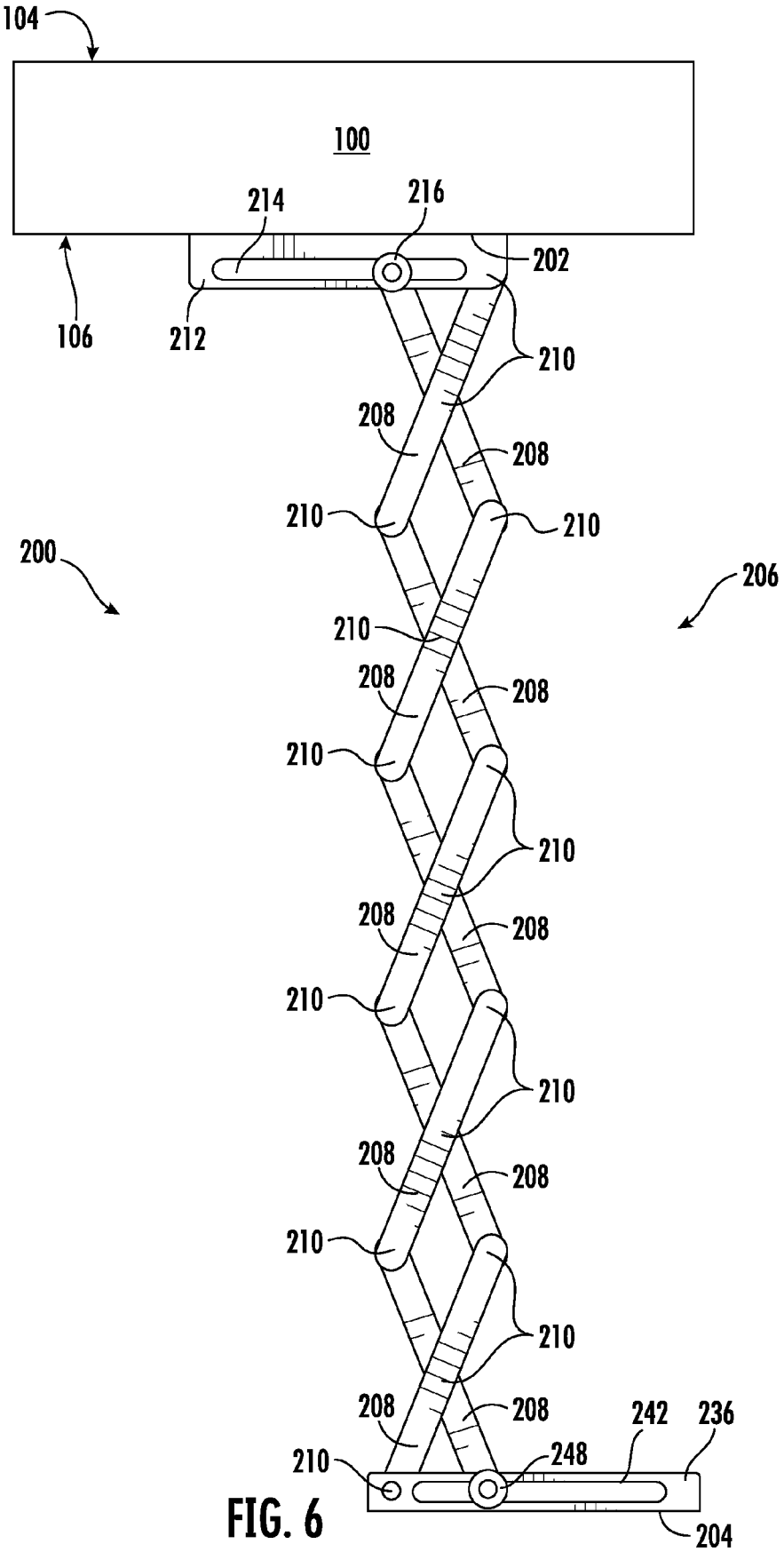
104
100
214
216
202
106
212
210
208
208
210
210
200
206
210
208
208
210
210
208
208
210
210
208
208
210
210
208
208
242
236
210
248
204

FIG. 6

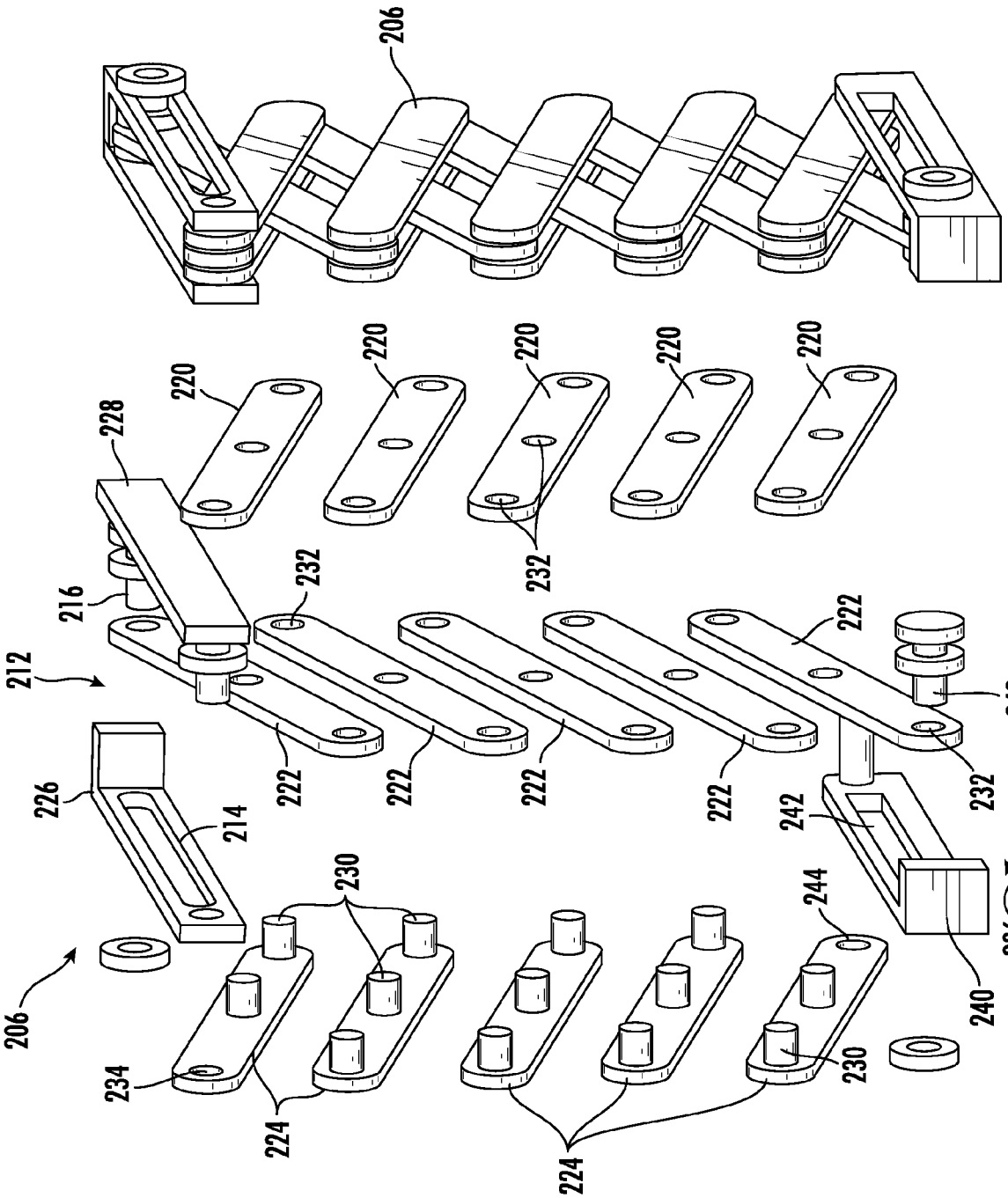
206
220
220
220
220
220
228
216
212
232
232
222
222
222
222
222
248
232
226
214
242
230
244
236
240
206
234
224
224
230

FIG. 7

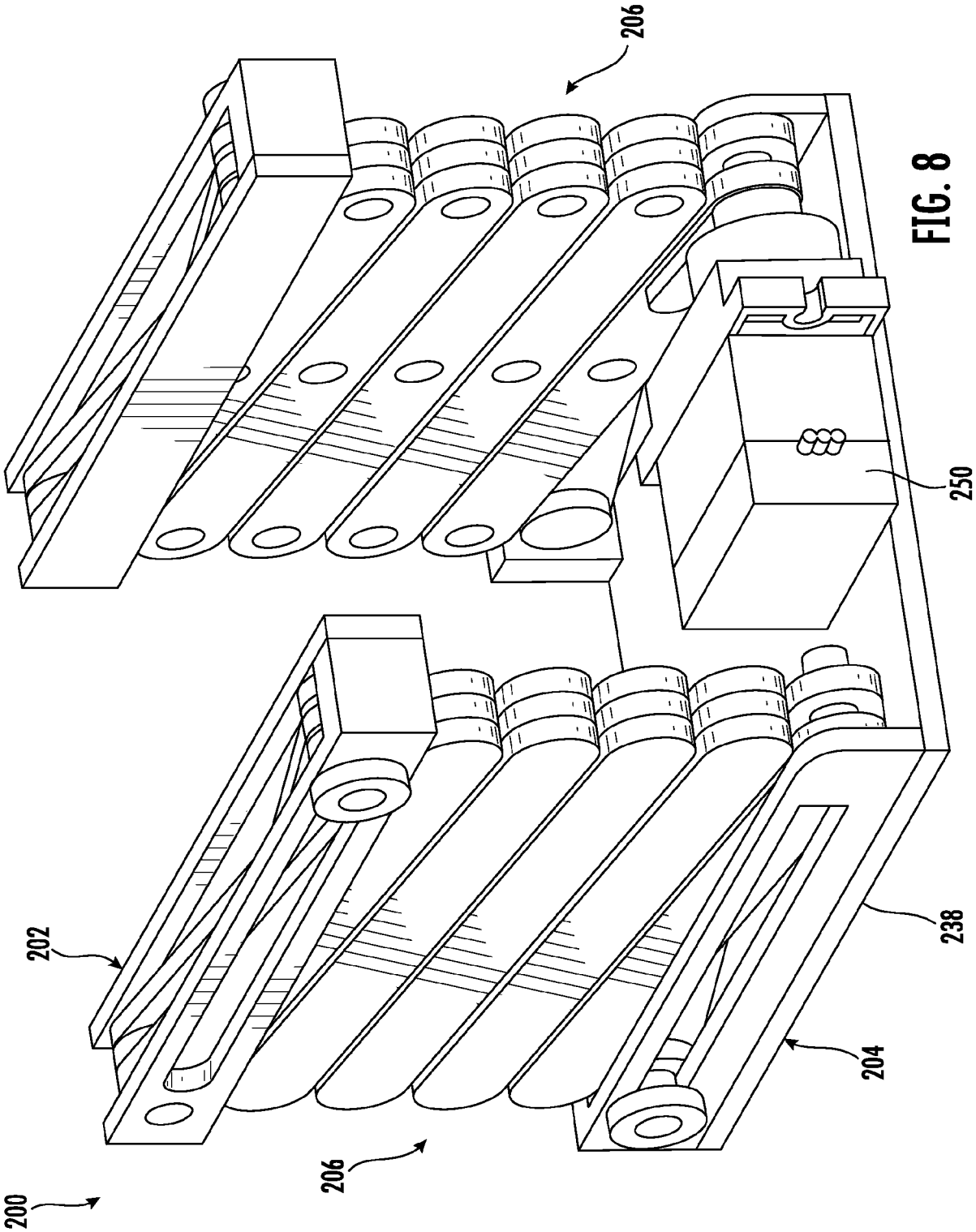

FIG. 8

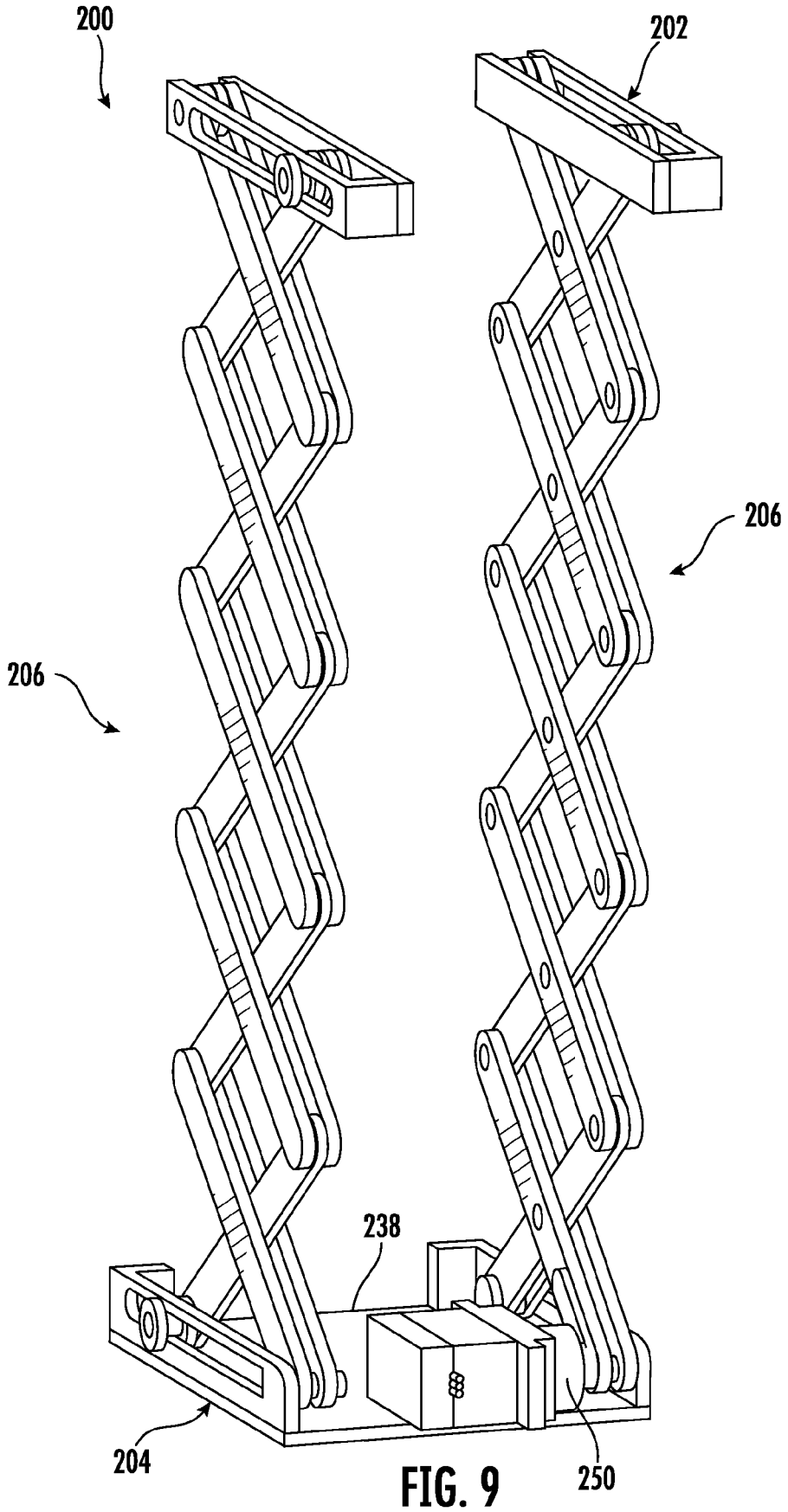

FIG. 9

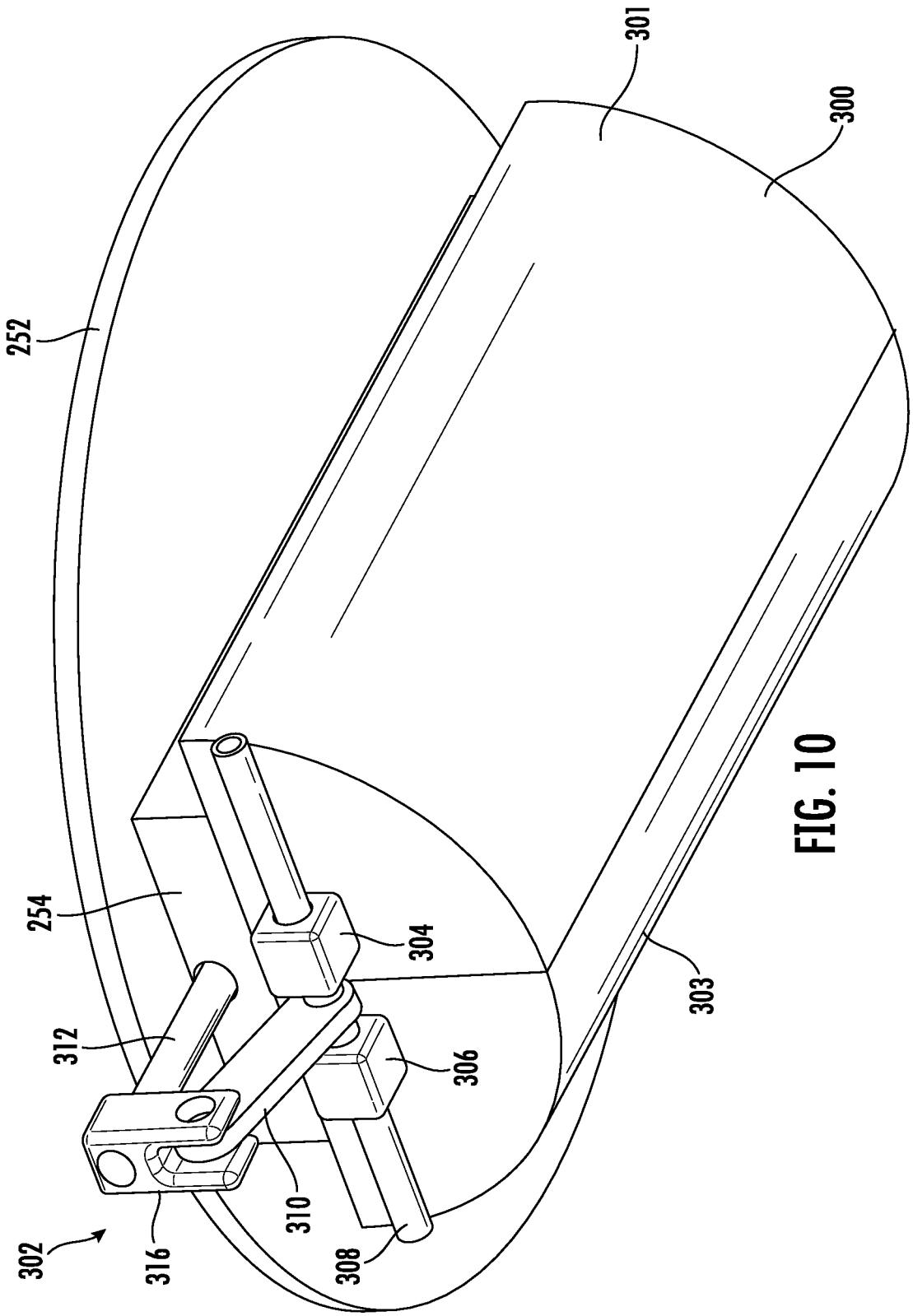

FIG. 10

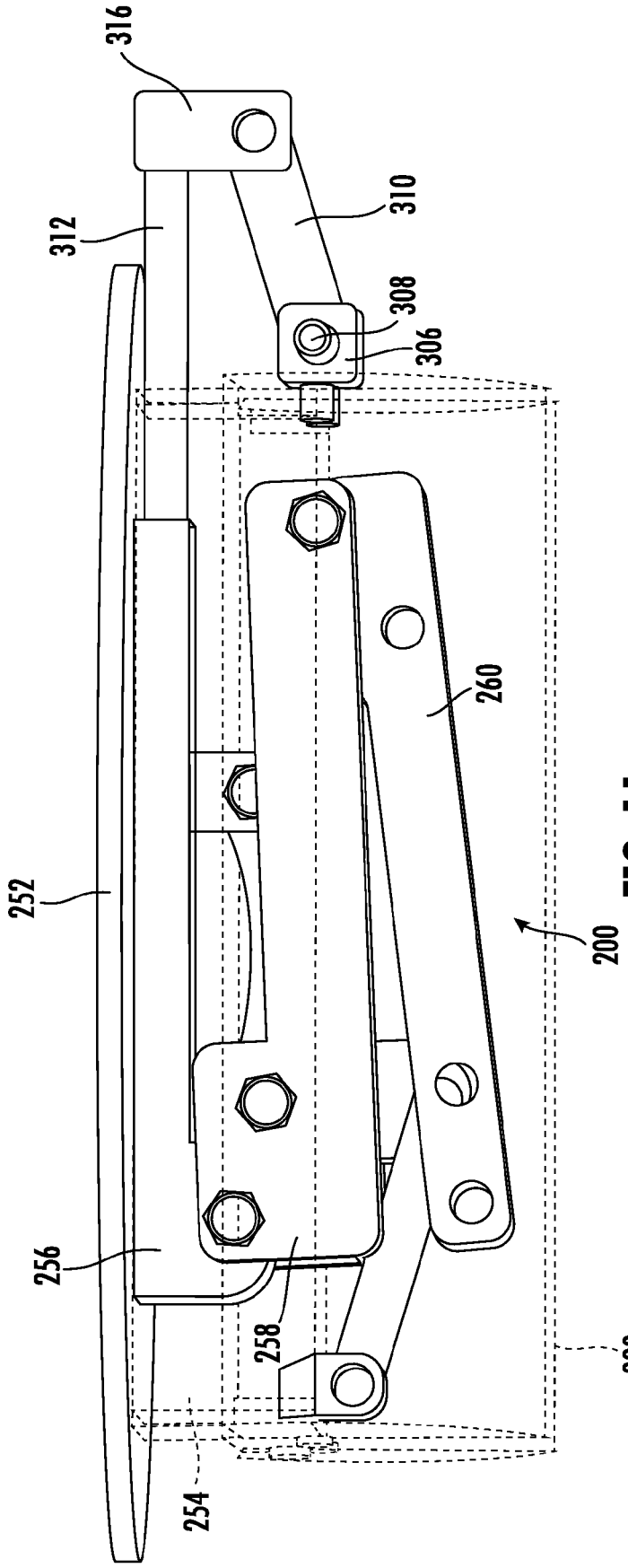

FIG. 11

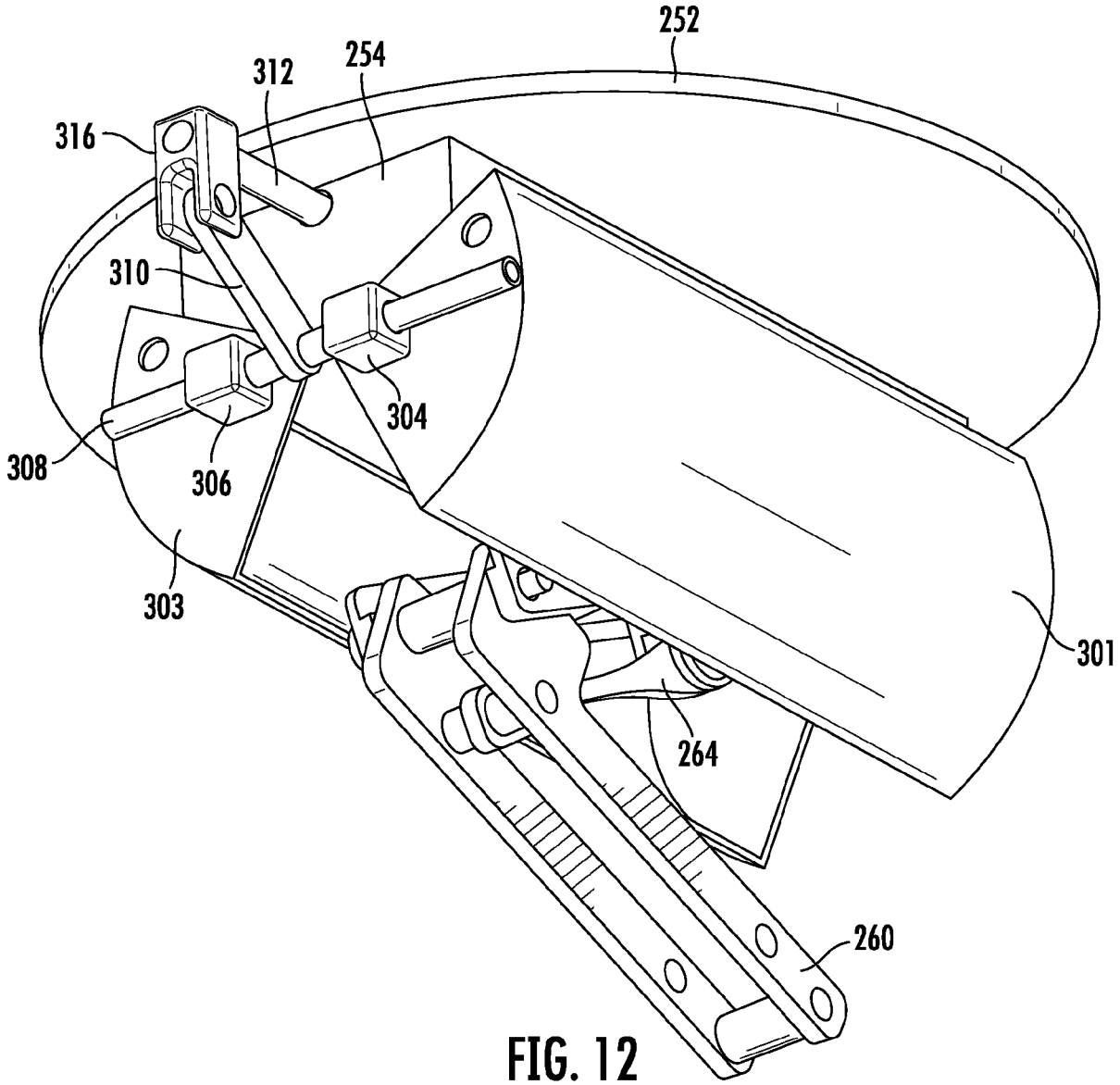

FIG. 12

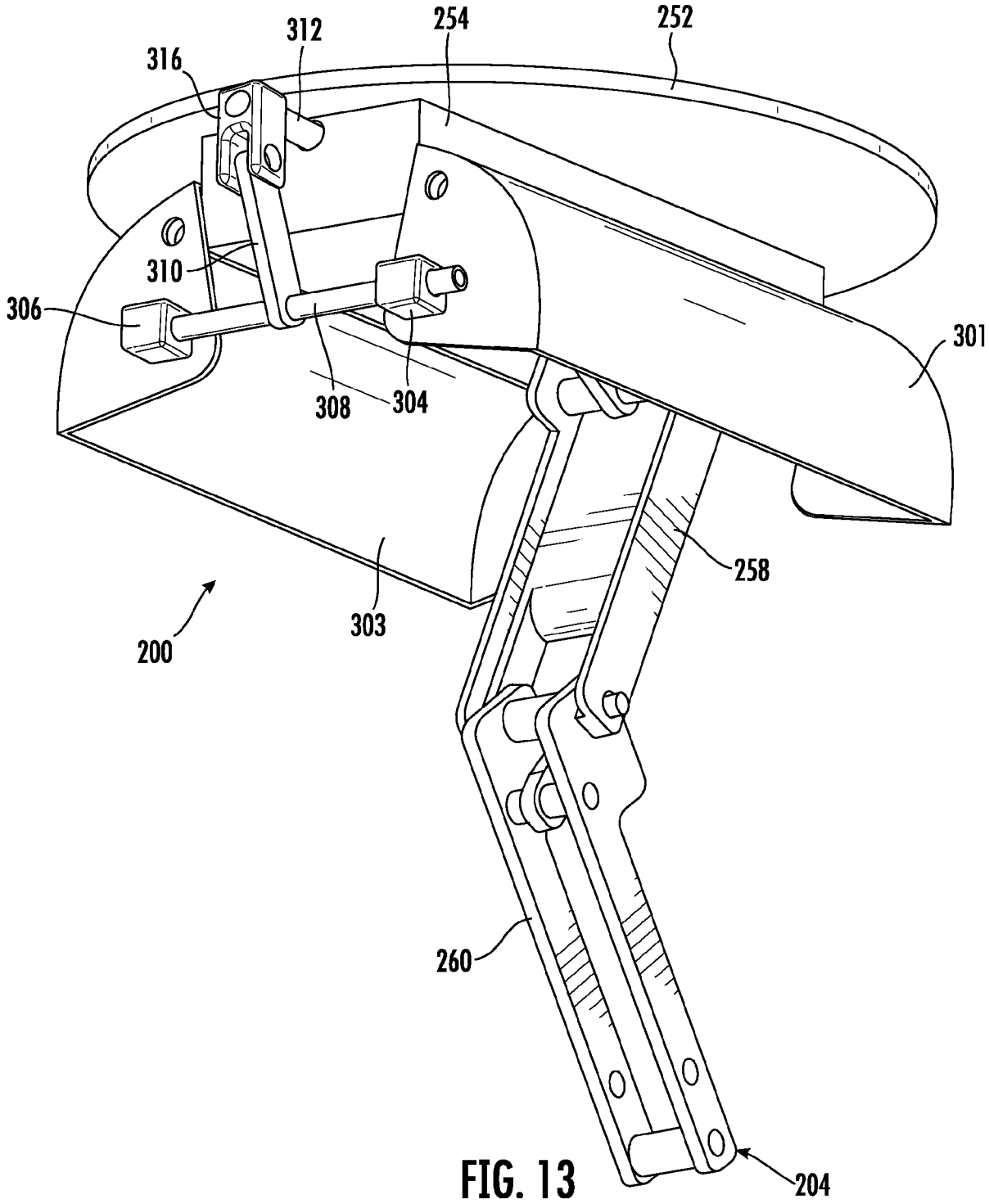

FIG. 13

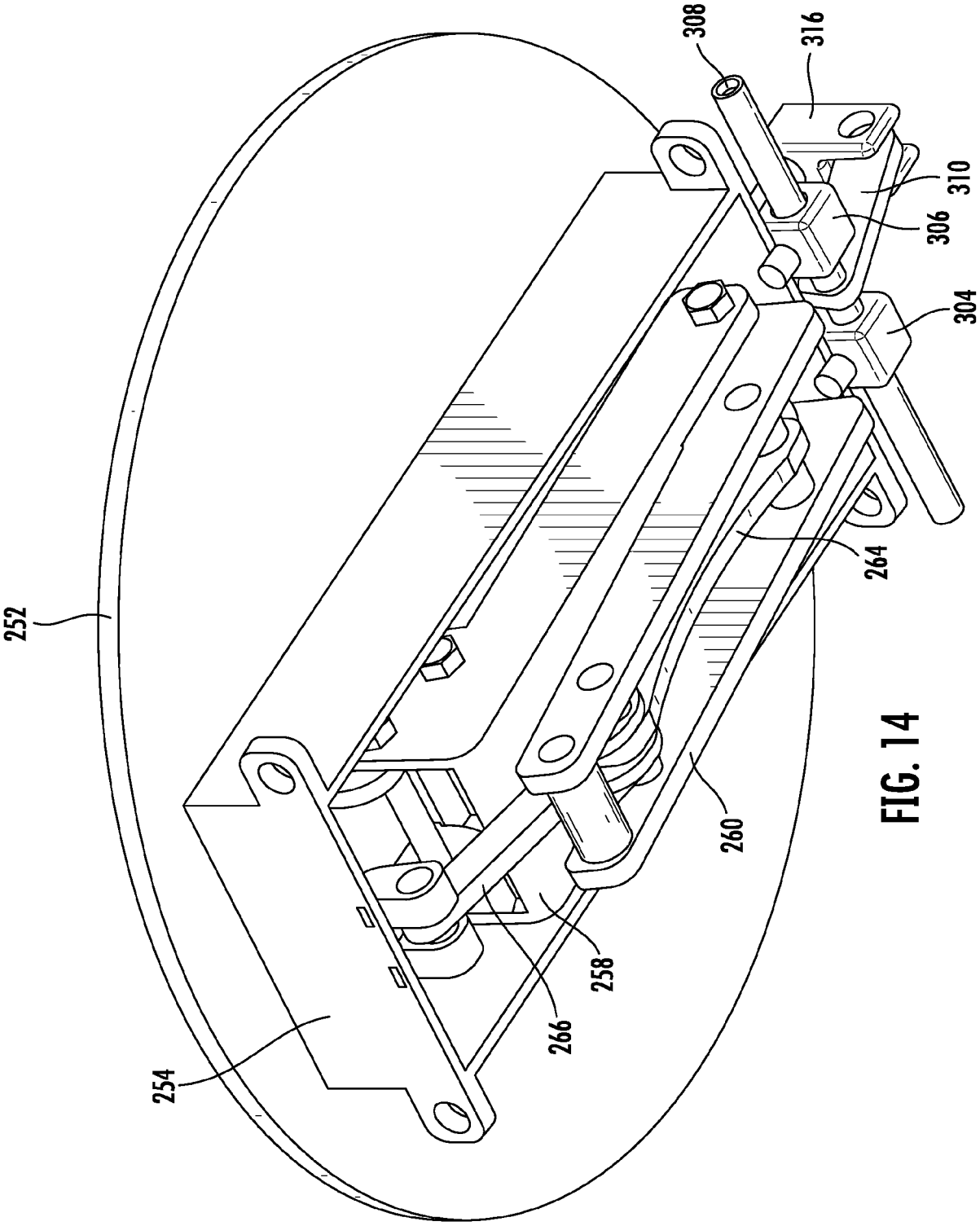

FIG. 14

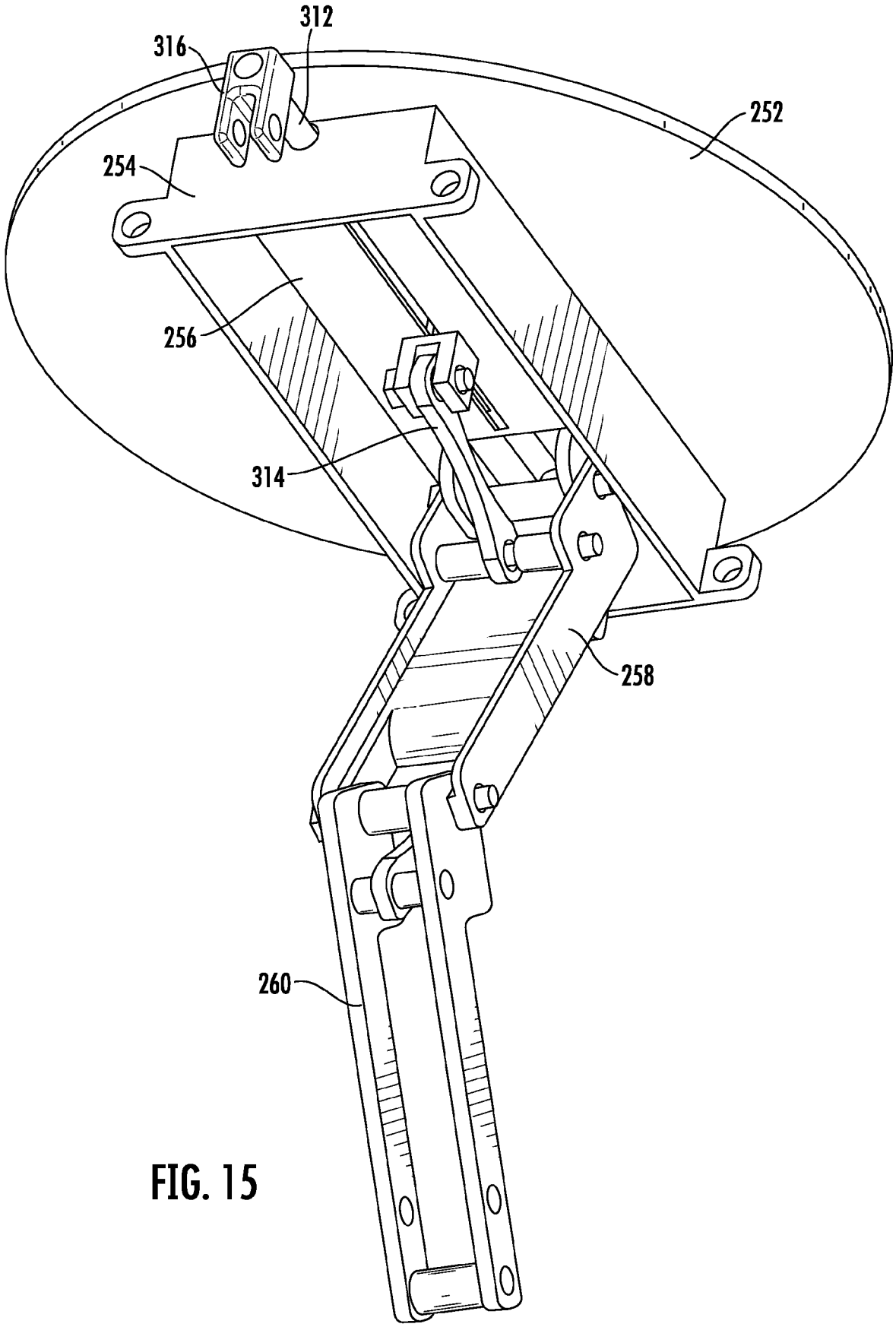

FIG. 15

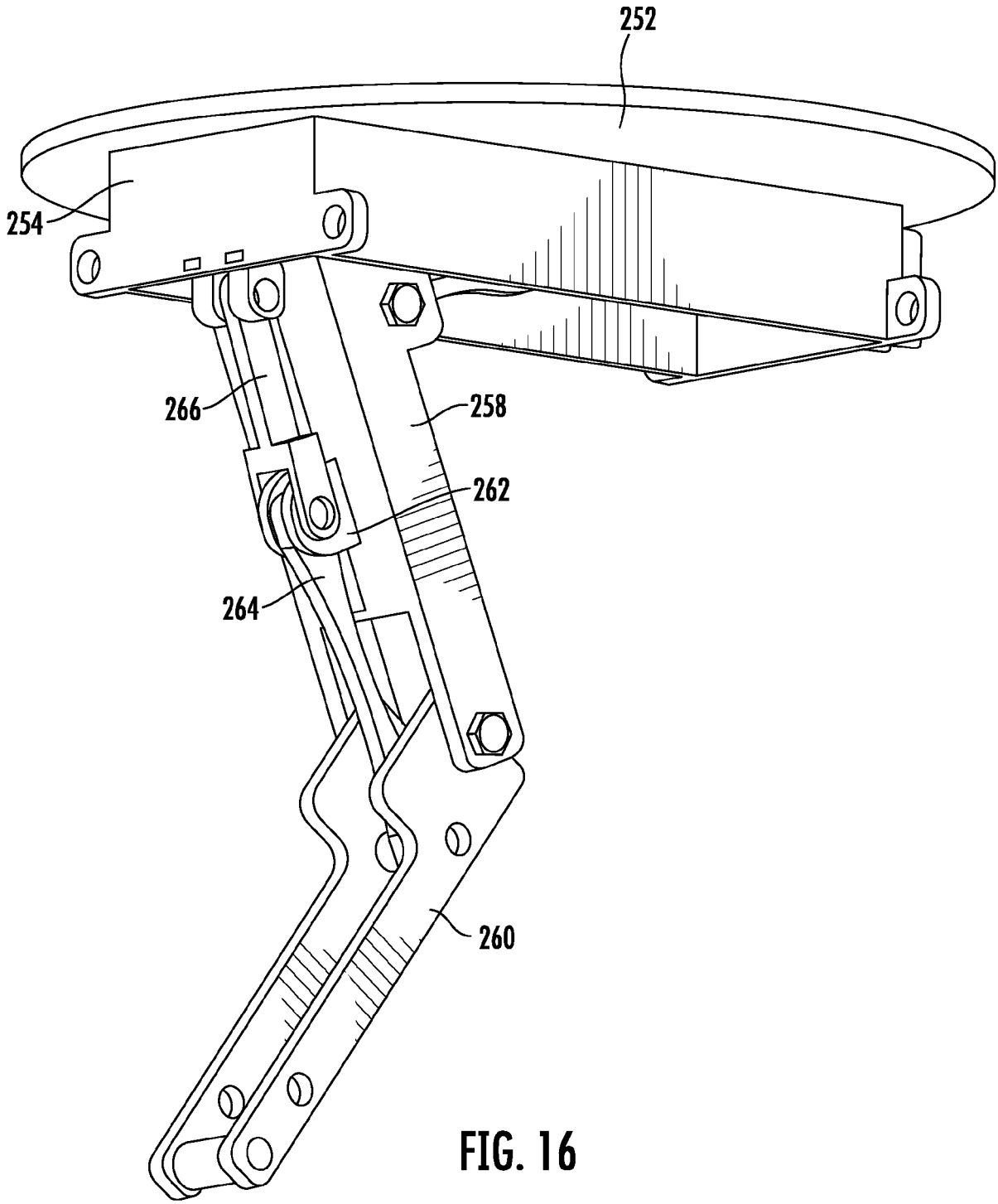

FIG. 16

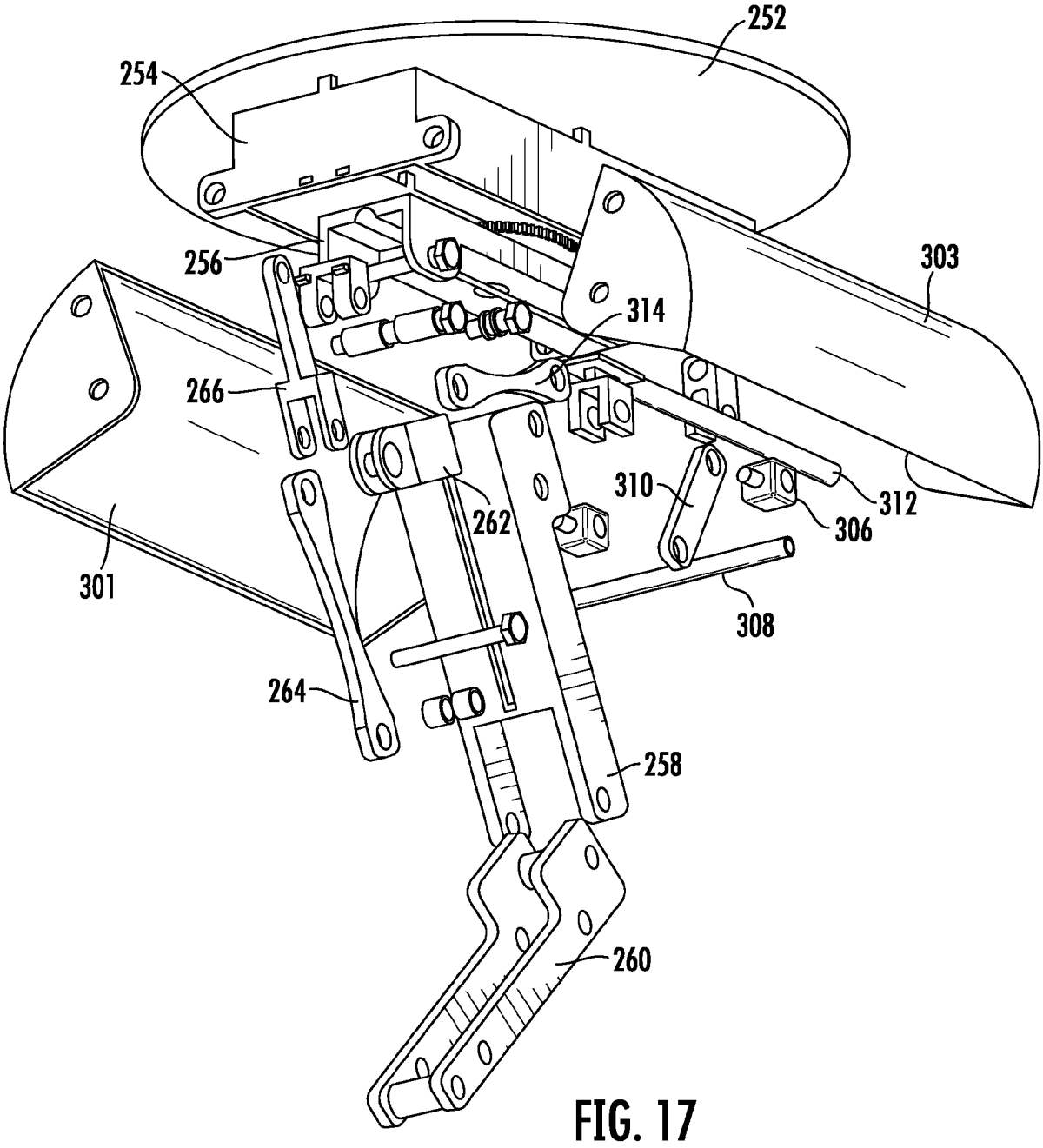

FIG. 17

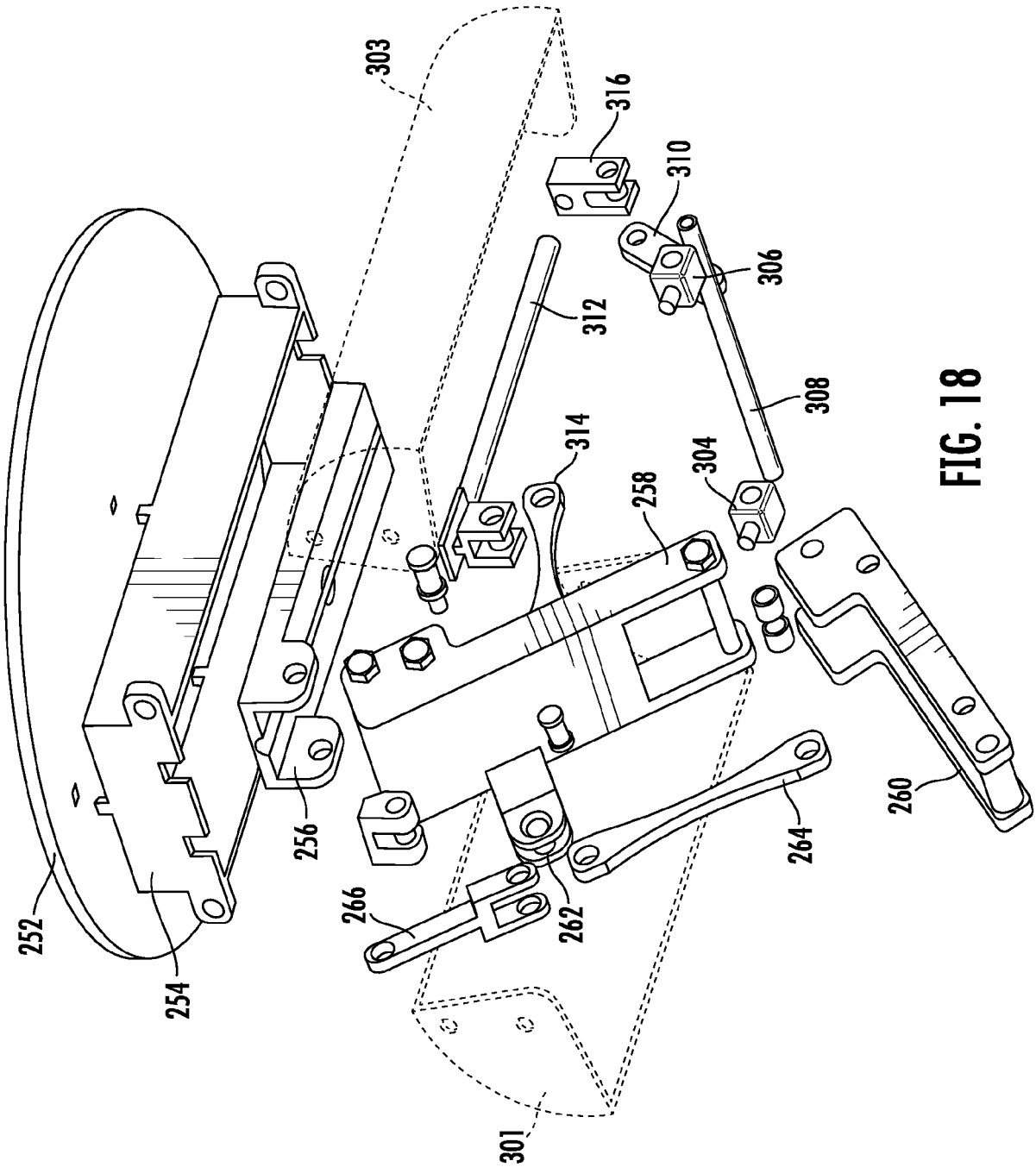
303
316
310
306
312
308
314
304
258
252
254
256
266
262
264
260
301

FIG. 18

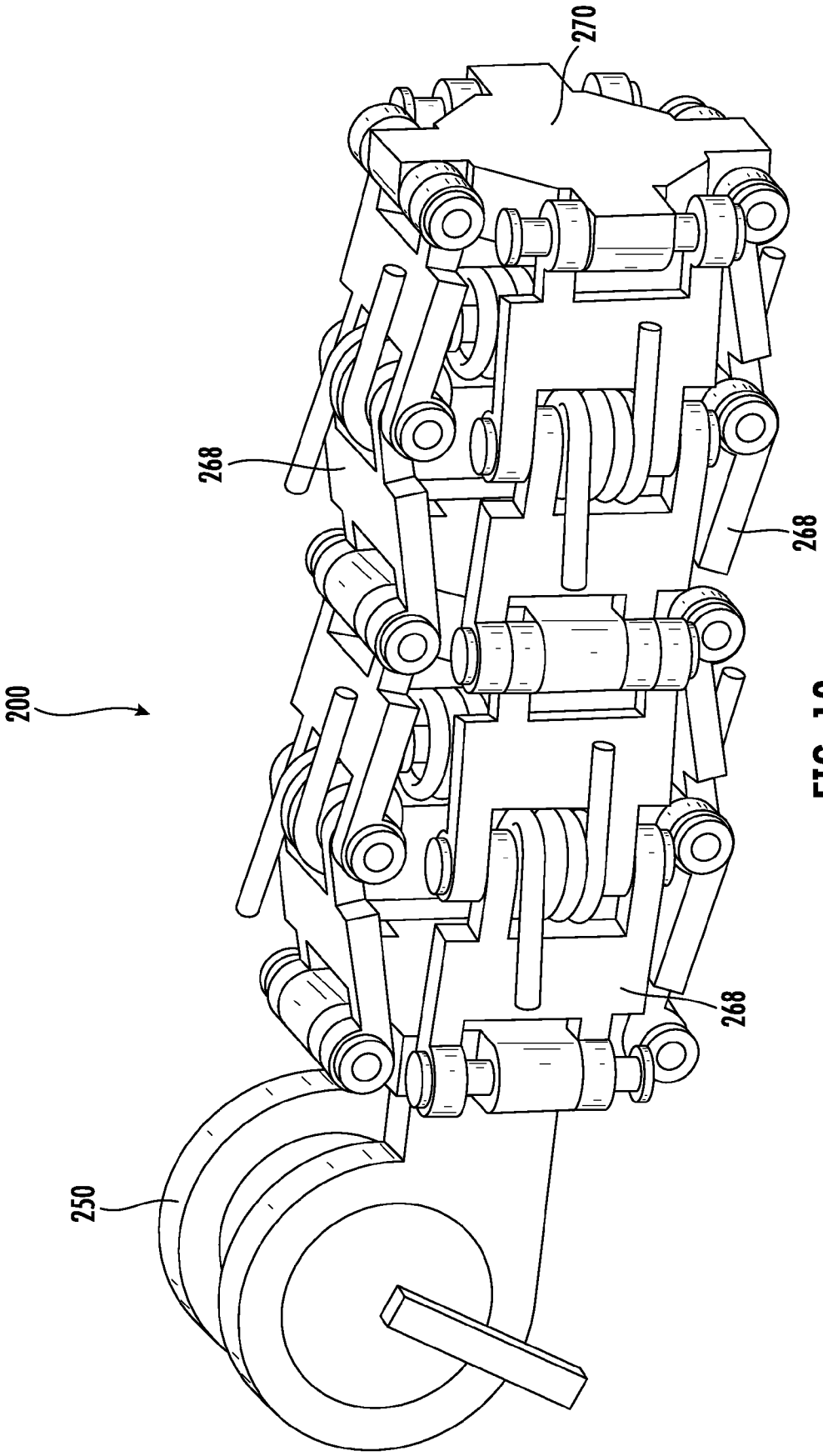

FIG. 19

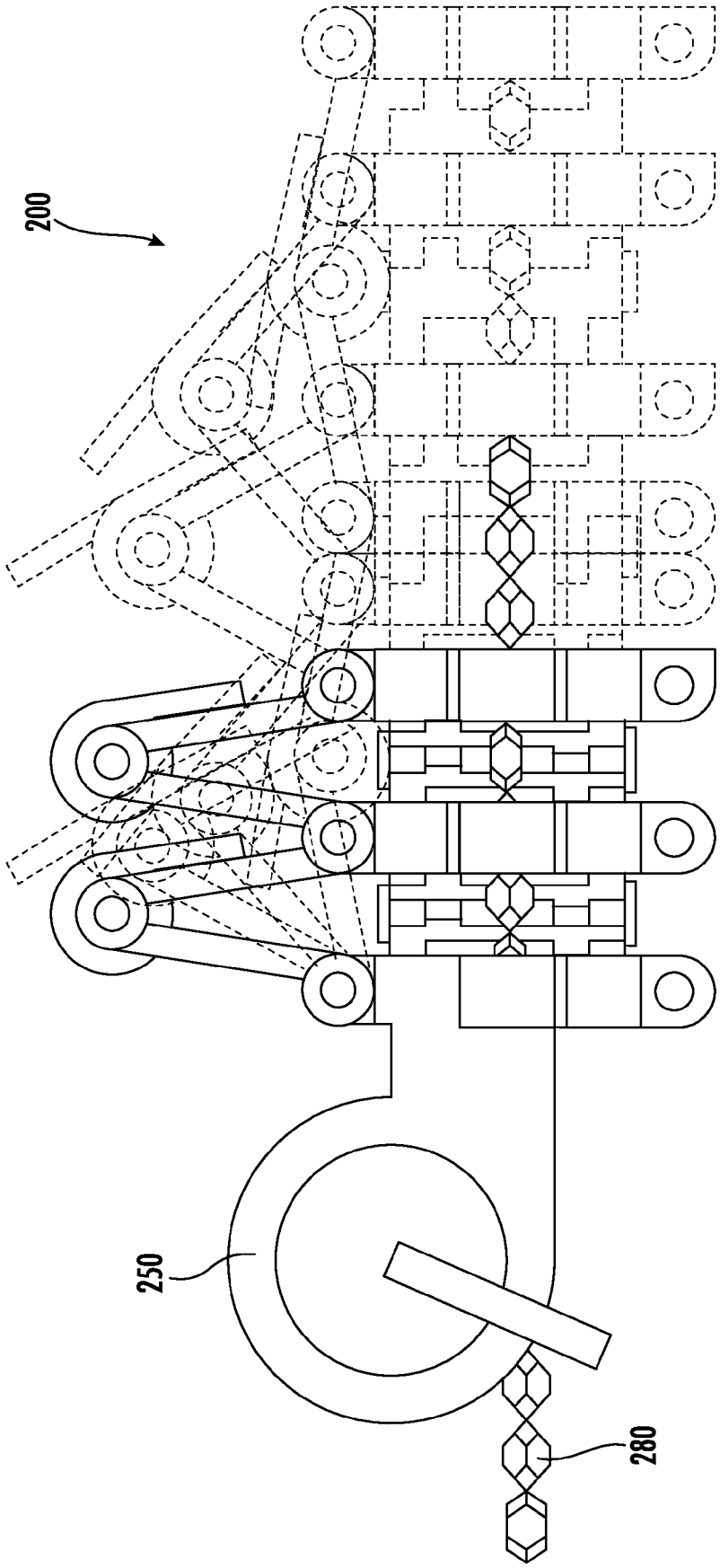

FIG. 20

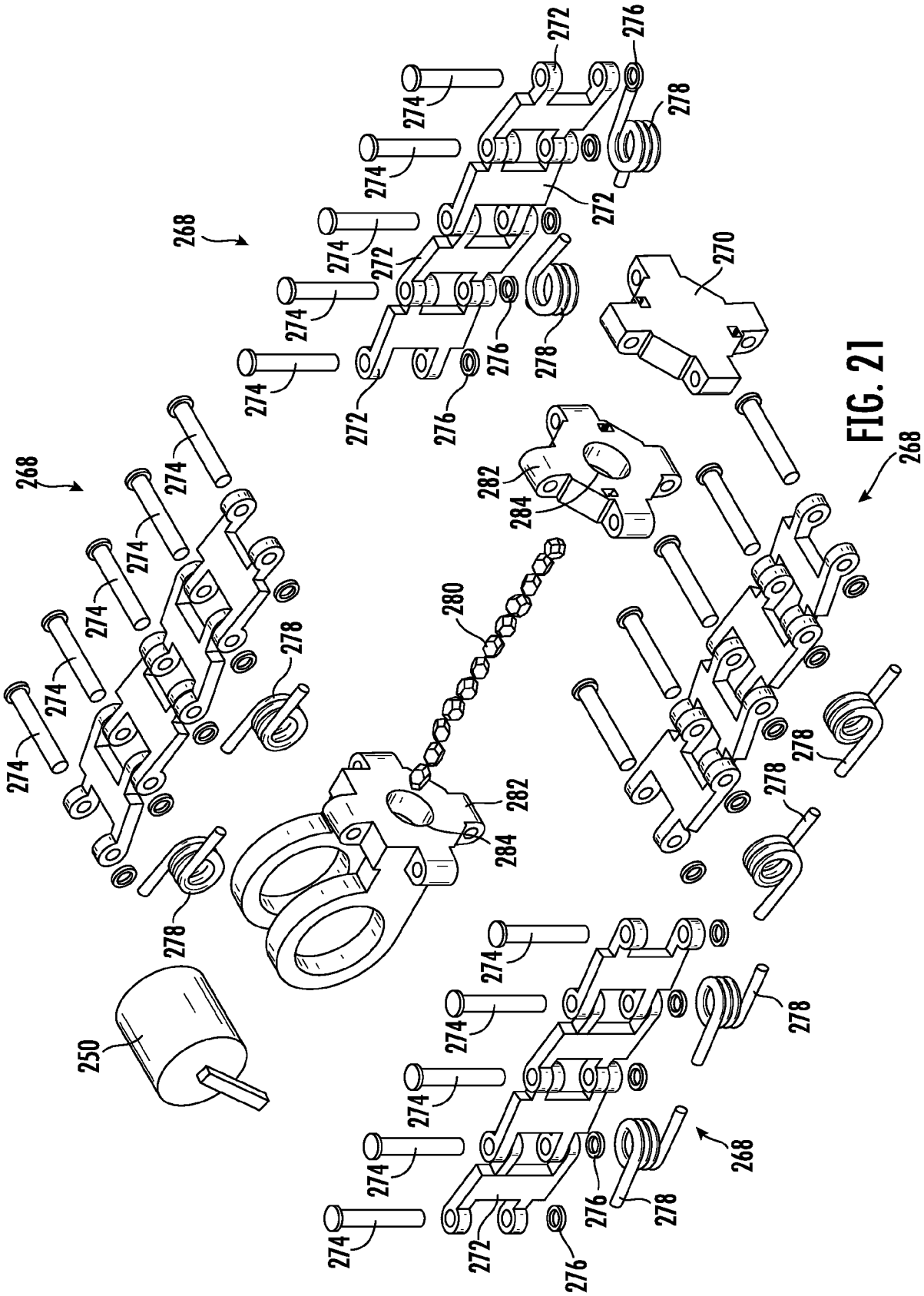

FIG. 21

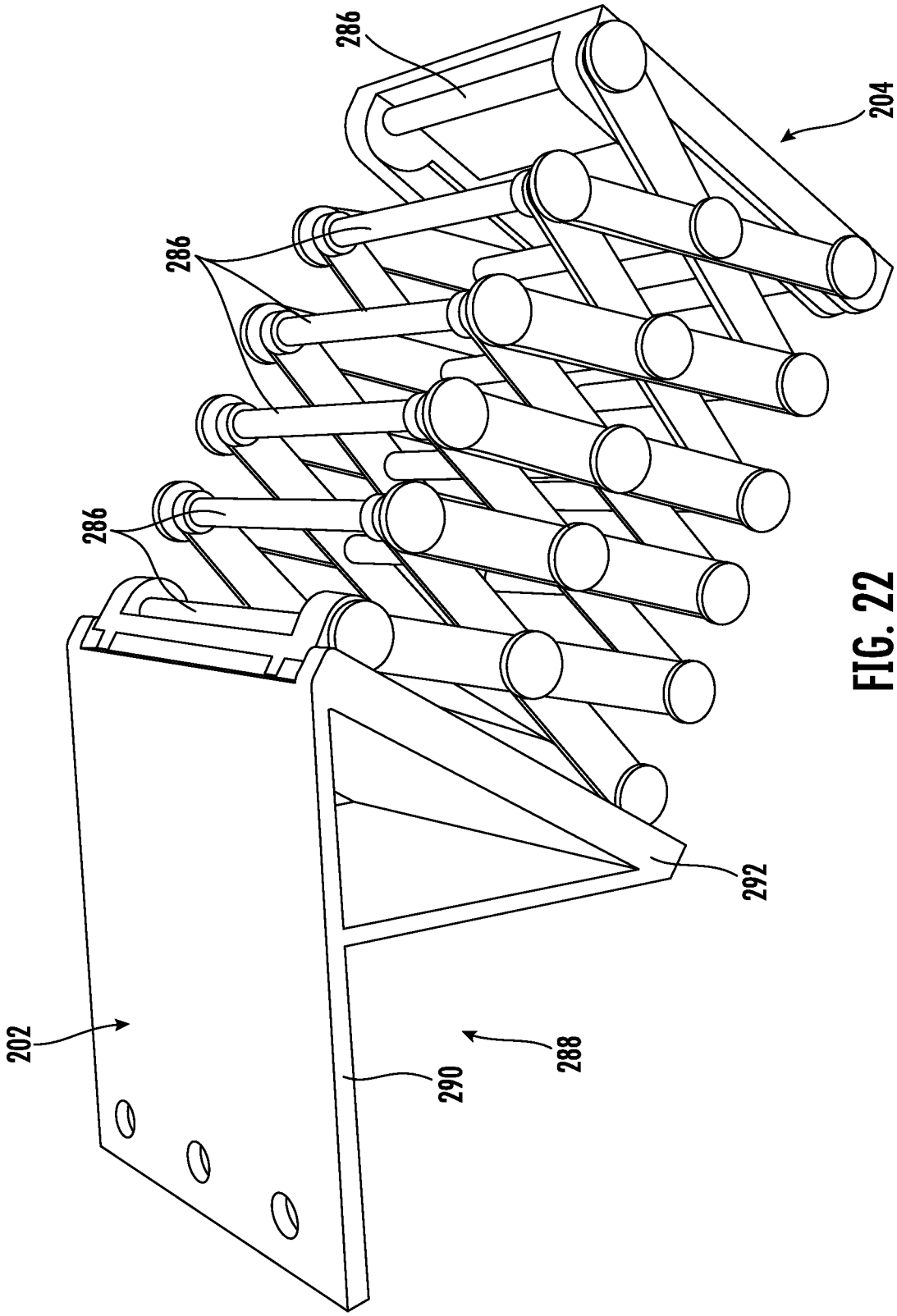

FIG. 22

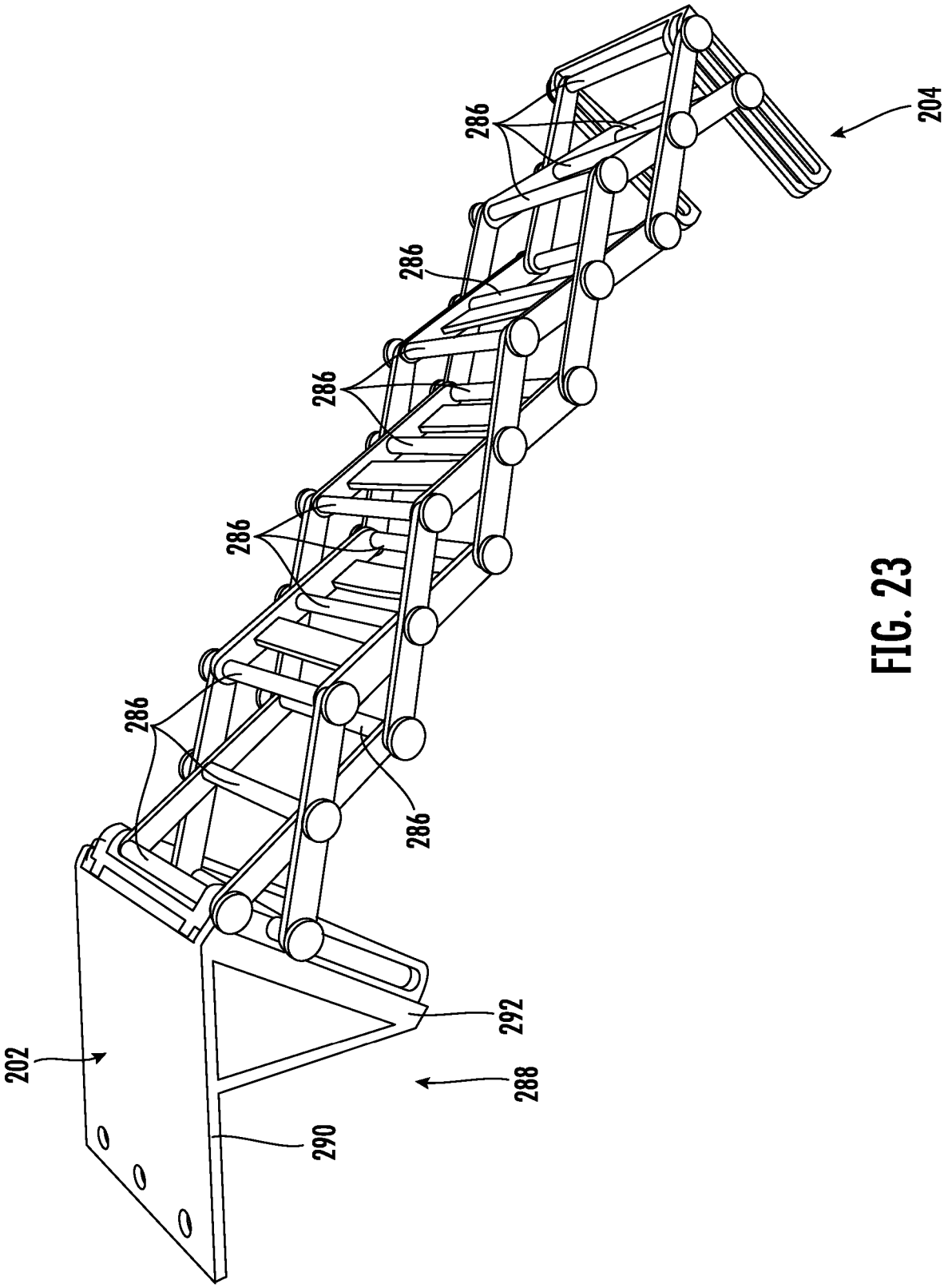

FIG. 23

LIGHTWEIGHT FOLDABLE ROBOTIC ARM FOR DRONES

CROSS-REFERENCE TO RELATED APPLICATIONS

[0001] This application claims benefit of the filing dates of U.S. Provisional Pat. Application Serial No. 63/341,744, having a filing date of May 13, 2022, U.S. Provisional Pat. Application Serial No. 63/341,759, having a filing date of May 13, 2022, and U.S. Provisional Pat. Application Serial No. 63/341,756, having a filing date of May 13, 2022, each of which is incorporated herein by reference for all purposes.

FIELD

[0002] The present subject matter relates generally to unmanned aerial vehicles, and more particularly to unmanned aerial vehicles and robotic arms for unmanned aerial vehicles.

BACKGROUND

[0003] Unmanned aerial vehicles ("UAV"), sometimes also referred to as drones, are used for a variety of tasks. A quadcopter is an example of a UAV. UAVs, such as quadcopters, may be used to perform tasks that are too difficult or too dangerous for humans or ground vehicles to accomplish, such as in harsh environments, locations where terrain is rough and speed is important, or locations high above the ground. For example, UAV's may be used to collect samples, repair power lines, or harvest produce from tall trees.

[0004] Providing a UAV with a robotic arm and an end effector, such as a gripper, thereon may enhance the UAV's capabilities for such tasks. A robotic arm may, however, undesirably increase the weight, drag, or power consumption of the UAV.

[0005] Accordingly, an improved UAV and robotic arm therefor with features such as light weight, improved aerodynamics, e.g., when the robotic arm is not deployed, and minimal power consumption, e.g., during actuation, would be useful.

BRIEF DESCRIPTION

[0006] Aspects and advantages of the invention will be set forth in part in the following description, or may be apparent from the description, or may be learned through practice of the invention.

[0007] In a first exemplary embodiment, an unmanned aerial vehicle is provided. The unmanned aerial vehicle includes a body having an upper side and a lower side opposite the upper side. The unmanned aerial vehicle also includes at least one rotor coupled to the body. The rotor is configured to generate lift in an upward direction. The unmanned aerial vehicle further includes an arm mounted to the lower side of the body and an actuator coupled to the arm. The actuator is configured to move the arm between a retracted position and an extended position. The actuator moves within a single degree of freedom to move the arm between the retracted position and the extended position.

[0008] In a second exemplary embodiment, an unmanned aerial vehicle is provided. The unmanned aerial vehicle includes a body with an arm mounted to a side of the body. The unmanned aerial vehicle also includes an actuator coupled to the arm. The actuator is configured to move the arm between a retracted position and an extended position. The actuator moves within a single degree of freedom to move the arm between the retracted position and the extended position.

[0009] These and other features, aspects and advantages of the present invention will become better understood with reference to the following description and appended claims. The accompanying drawings, which are incorporated in and constitute a part of this specification, illustrate embodiments of the invention and, together with the description, serve to explain the principles of the invention.

BRIEF DESCRIPTION OF THE DRAWINGS

[0010] A full and enabling disclosure of the present invention, including the best mode thereof, directed to one of ordinary skill in the art, is set forth in the specification, which makes reference to the appended figures.

[0011] FIG. **1** provides a perspective view of an unmanned aerial vehicle according to one or more embodiments of the present subject matter.

[0012] FIG. **2** provides another perspective view of the unmanned aerial vehicle of FIG. **1**.

[0013] FIG. **3** provides a side view of an arm for an unmanned aerial vehicle according to one or more embodiments of the present disclosure in a retracted position.

[0014] FIG. **4** provides a side view of the arm of FIG. **3** in a first intermediate position.

[0015] FIG. **5** provides a side view of the arm of FIG. **3** in a second intermediate position.

[0016] FIG. **6** provides a side view of the arm of FIG. **3** in an extended position.

[0017] FIG. **7** provides an exploded view of the arm of FIG. **3**.

[0018] FIG. **8** provides a perspective view of the arm of FIG. **3** in the retracted position and an actuator.

[0019] FIG. **9** provides a perspective view of the arm of FIG. **3** in the extended position and the actuator of FIG. **8**.

[0020] FIG. **10** provides a perspective view of a shell for a robotic arm according to one or more exemplary embodiments of the present disclosure.

[0021] FIG. **11** provides a side view of the exemplary shell of FIG. **10** and an exemplary robotic arm therein according to one or more additional exemplary embodiments of the present disclosure.

[0022] FIG. **12** provides a perspective view of the exemplary shell of FIG. **10** in an open position and the exemplary robotic arm of FIG. **11** in an intermediate position.

[0023] FIG. **13** provides a perspective view of the exemplary shell of FIG. **10** in an open position and the exemplary robotic arm of FIG. **11** in an extended position.

[0024] FIG. **14** provides a perspective view of the exemplary robotic arm of FIG. **11** in the retracted position.

[0025] FIG. **15** provides a perspective view of the exemplary robotic arm of FIG. **11** in the extended position.

[0026] FIG. **16** provides another perspective view of the exemplary robotic arm of FIG. **11** in the extended position.

[0027] FIG. **17** provides an exploded view of the exemplary shell of FIG. **10** and the exemplary robotic arm of FIG. **11**.

[0028] FIG. **18** provides another exploded view of the exemplary shell of FIG. **10** and the exemplary robotic arm of FIG. **11**.

[0029] FIG. **19** provides a perspective view of an arm for an unmanned aerial vehicle according to one or more additional exemplary embodiments of the present disclosure in an extended position.

[0030] FIG. **20** provides a side view of the exemplary arm of FIG. **19** in a retracted position, with an extended position and several intermediate positions of the exemplary arm shown in dashed lines.

[0031] FIG. **21** provides an exploded view of the exemplary arm of FIG. **19**.

[0032] FIG. **22** provides a perspective view of an exemplary arm for an unmanned aerial vehicle according to one or more additional embodiments of the present disclosure.

[0033] FIG. **23** provides another perspective view of the exemplary arm of FIG. **22**.

DETAILED DESCRIPTION

[0034] Reference now will be made in detail to embodiments of the invention, one or more examples of which are illustrated in the drawings. Each example is provided by way of explanation of the invention, not limitation of the invention. In fact, it will be apparent to those skilled in the art that various modifications and variations can be made in the present invention without departing from the scope or spirit of the invention. For instance, features illustrated or described as part of one embodiment can be used with another embodiment to yield a still further embodiment. Thus, it is intended that the present invention covers such modifications and variations as come within the scope of the appended claims and their equivalents.

[0035] As used herein, terms of approximation such as "generally," "about," or "approximately" include values within ten percent greater or less than the stated value. When used in the context of an angle or direction, such terms include within ten degrees greater or less than the stated angle or direction, e.g., "generally vertical" includes forming an angle of up to ten degrees either clockwise or counterclockwise with the vertical direction V.

[0036] The detailed description uses numerical and letter designations to refer to features in the drawings. Like or similar designations in the drawings and description have been used to refer to like or similar parts of the invention. As used herein, the terms "first," "second," and "third" may be used interchangeably to distinguish one component from another and are not intended to signify location or importance of the individual components.

[0037] The terms "includes" and "including" are intended to be inclusive in a manner similar to the term "comprising." Similarly, the term "or" is generally intended to be inclusive (i.e., "A or B" is intended to mean "A or B or both"). In addition, here and throughout the specification and claims, range limitations may be combined and/or interchanged. Such ranges are identified and include all the sub-ranges contained therein unless context or language indicates otherwise. For example, all ranges disclosed herein are inclusive of the endpoints, and the endpoints are independently combinable with each other. The singular forms "a," "an," and "the" include plural references unless the context clearly dictates otherwise.

[0038] The word "exemplary" is used herein to mean "serving as an example, instance, or illustration." In addition, references to "an embodiment" or "one embodiment" does not necessarily refer to the same embodiment, although it may. Any implementation described herein as "exemplary" or "an embodiment" is not necessarily to be construed as preferred or advantageous over other implementations. Moreover, each example is provided by way of explanation of the invention, not limitation of the invention. In fact, it will be apparent to those skilled in the art that various modifications and variations can be made in the present invention without departing from the scope of the invention. For instance, features illustrated or described as part of one embodiment can be used with another embodiment to yield a still further embodiment. Thus, it is intended that the present invention covers such modifications and variations as come within the scope of the appended claims and their equivalents.

[0039] As illustrated for example in FIGS. **1** and **2**, embodiments of the present disclosure include unmanned aerial vehicles, such as the exemplary unmanned aerial vehicle **100** illustrated in FIGS. **1** and **2**. Unmanned aerial vehicles may also be referred to as "UAVs" or drones. In particular, the exemplary embodiment of the UAV **100** illustrated in FIGS. **1** and **2** is also known as a quadcopter. In additional embodiments, folding robotic arms as described hereinbelow may be used with any suitable UAV **100**, such as a dual rotor UAV, other multirotor UAV (e.g., a tricopter or a multirotor UAV having more than four rotors), single rotor UAV, fixed-wing UAV, or other similar UAVs.

[0040] Unmanned aerial vehicles generally include a main body **102** or chassis and one or more lift-generating and/or propulsion (thrust-generating) mechanisms. A UAV further includes one or more controllers, e.g., integrated circuits, including a wireless communication module and antenna for sending and receiving remote commands, instructions, and other information. A UAV may also include a vision system, e.g., comprising a camera, global positioning system (GPS), gyroscopes, and other components or accessories, such as a manipulator, e.g., a robotic arm such as the exemplary robotic arms described hereinbelow, which are communicatively coupled with the controller and may be operated by the controller, e.g., in response to remote commands received wirelessly by the controller.

[0041] As may be seen in FIGS. **1** and **2**, the UAV **100**, e.g., quadcopter **100**, may include an upper **104** side and a lower side **106** opposite the upper side **104**, such as an upper side **104** of the main body **102** and a lower side **106** of the main body **102**. The terms "upper" and "lower" may be defined with respect to each other, e.g., as facing in opposite directions, and with respect to a vertical direction or orientation, e.g., wherein the UAV **100** is operable and configured to move upward along the vertical direction when the lift-generating mechanism is activated. For example, the illustrated quadcopter **100** includes four rotors **108** which generate lift when rotated. As those of ordinary skill in the art will recognize and understand, each rotor **108** includes a propeller **110** coupled to a motor (not shown), and each motor may be controlled, e.g., selectively activated or deactivated and the speed or direction thereof adjusted, by the controller of the UAV **100**. By varying the speed of rotation, direction of rotation, or angle of each rotor **108** or at least one rotor **108**, the UAV **100** may move horizontally, e.g., in a horizontal direction generally parallel to the ground or generally perpendicular to the vertical direction, due to the varying amount or direction of lift generated by the rotors **108** which are operated at different speeds, rotated in different directions, or at various angles. Such variations across

and among the rotors **108** also permit variations in and control of the pitch, yaw, and roll of the UAV **100**.

[0042] The controller may be generally configured to facilitate UAV operation. In this regard, the lift and/or propulsion mechanism and other components, such as the vision system (if provided) or robotic arm (if provided) may be in communication with the controller such that controller may receive control inputs from user input devices, and may otherwise regulate operation of the UAV **100**. For example, signals generated by the controller may activate or operate the UAV **100**, including any or all system components, subsystems, or interconnected devices, in response to user inputs and other control commands wirelessly received by the controller. The various components of the UAV **100** may be in communication with the controller via, for example, one or more signal lines or shared communication busses. In this manner, Input/Output ("I/O") signals may be routed between the controller and various operational components of the UAV **100**.

[0043] As used herein, the terms "processing device," "computing device," "controller," or the like may generally refer to any suitable processing device, such as a general or special purpose microprocessor, a microcontroller, an integrated circuit, an application specific integrated circuit (ASIC), a digital signal processor (DSP), a field-programmable gate array (FPGA), a logic device, one or more central processing units (CPUs), a graphics processing units (GPUs), processing units performing other specialized calculations, semiconductor devices, etc. In addition, these "controllers" are not necessarily restricted to a single element but may include any suitable number, type, and configuration of processing devices integrated in any suitable manner to facilitate operation of the UAV, such as the vision system may include a dedicated and specialized controller separate from or onboard a main controller, similarly, the robotic arm may also or instead be operated by a dedicated controller. Alternatively, controller **166** may be constructed without using a microprocessor, e.g., using a combination of discrete analog and/or digital logic circuitry (such as switches, amplifiers, integrators, comparators, flip-flops, AND/OR gates, and the like) to perform control functionality instead of relying upon software.

[0044] The controller may include, or be associated with, one or more memory elements or non-transitory computer-readable storage mediums, such as RAM, ROM, EEPROM, EPROM, flash memory devices, magnetic disks, or other suitable memory devices (including combinations thereof). These memory devices may be a separate component from the processor or may be included onboard within the processor. In addition, these memory devices can store information and/or data accessible by the one or more processors, including instructions that can be executed by the one or more processors. It should be appreciated that the instructions can be software written in any suitable programming language or can be implemented in hardware. Additionally, or alternatively, the instructions can be executed logically and/or virtually using separate threads on one or more processors.

[0045] For example, the controller may be operable to execute programming instructions or micro-control code associated with an operation of the UAV **100**. In this regard, the instructions may be software or any set of instructions that when executed by the processing device, cause the processing device to perform operations, such as running one or more software applications, receiving user input, processing user input, etc. Moreover, it should be noted that the controller as disclosed herein is capable of and may be operable to perform any methods, method steps, or portions of methods as disclosed herein. For example, in some embodiments, methods disclosed herein may be embodied in programming instructions stored in the memory and executed by the controller.

[0046] The memory devices may also store data that can be retrieved, manipulated, created, or stored by the one or more processors or portions of the controller. The data can include, for instance, data to facilitate performance of methods described herein. The data can be stored locally (e.g., on the controller) in one or more databases and/or may be split up so that the data is stored in multiple locations. In addition, or alternatively, the one or more database(s) can be connected to the controller through any suitable network(s), such as through a high bandwidth local area network (LAN) or wide area network (WAN). In this regard, for example, the controller may further include a communication module or interface that may be used to communicate with one or more other component(s) of the UAV **100**, the controller, an external controller, or any other suitable device, e.g., via any suitable communication lines or network(s) and using any suitable communication protocol. The communication interface can include any suitable components for interfacing with one or more network(s), including for example, transmitters, receivers, ports, controllers, antennas, or other suitable components.

[0047] Returning to FIGS. **1** and **2**, a folding robotic arm **200** may be mounted to the UAV **100**, such as at a proximal end **202** of the arm **200**. An end effector **201**, e.g., gripper or any other suitable device which permits interaction with external objects, may be provided at a distal end **204** of the arm **200**. Any of the exemplary folding robotic arms **200** according to the embodiments illustrated in FIGS. **3-23** may be mounted to any suitable UAV **100**, such as but not limited to the exemplary quadcopter **100** shown in FIGS. **1** and **2**.

[0048] Referring now to FIGS. **3-9**, in some embodiments, the folding robotic arm **200** may comprise one or more scissor arms **206**. For example, the folding robotic arm **200** may include a first scissor arm **206** and a second scissor arm **206** as in the illustrated embodiment. The first and second scissor arms **206** may be mirrored and may be parallel to each other. In some embodiments, one or more cross links **286** (see, e.g., FIGS. **22** and **23**) may be provided between the first and second scissor arms **206**, such as extending from one scissor arm **206** to the other generally perpendicular to both scissor arms **206**. Such cross links **286** may promote synchronous movement, e.g., extending and retracting, of the scissor arms **206** of the folding robotic arm **200**.

[0049] As illustrated in FIGS. **3** through **6**, the folding robotic arm **200** may be mounted to a lower side **106** of a UAV **100**. FIGS. **3** through **6** illustrate a transition or sequence of motion for the folding robotic arm **200** from a retracted, folded position (FIG. **3**), through a series of intermediate positions (FIGS. **4** and **5**) to an extended, unfolded, position (FIG. **6**). Where FIGS. **3** through **6** provide side views of the folding robotic arm **200**, only one of the scissor arms **206** is visible. It is to be understood that the other scissor arm **206** is substantially identical to the illustrated scissor arm **206**, e.g., the other scissor arm **206** may be a mirror of the illustrated scissor arm **206** in FIGS. **3** through **6**.

[0050] Each scissor arm **206** includes a plurality of links **208** which are serially connected at a plurality of joints **210**. Each joint **210** may be a movable joint **210**, such as a revolute joint. Each scissor arm **206** may also include a top slider **212**, e.g., at the proximal end of the folding robotic arm **200**, such as the top slider **212** may be mounted to the lower side **106** of the UAV **100**. A slot **214** may be formed in the top slider **212** and a roller **216** mounted to a first link **208** of the plurality of links **208** may be received within the slot **214**.

[0051] As may be seen, e.g., in FIG. **7**, each scissor arm **206** may include various types of links, such as the plurality of links **208** may include a plurality of inner links **220**, a plurality of center links **222**, and a plurality of outer links **224**. One set of links may include male fasteners, while one or more other sets of links may include holes which are configured to receive the male fasteners and thereby form the joints **210**. For example, in the illustrated embodiments, e.g., as shown in FIG. **7**, the plurality of outer links **224** includes male fasteners **230** on each outer link **224**, while the plurality of inner links **220** and the plurality of center links **222** include holes **232** therethrough in which the male fasteners **230** may be received to form the scissor arm **206**.

[0052] The top slider **212** may be coupled to one of the outer links **220**, such as a top outer link **220**. The top slider **212** may include an outer bracket **226**, e.g., in which the slot **214** is formed. The top slider **212** may also include an inner bracket **228** which is coupled to the outer bracket **226** with the top outer link **220** therebetween. The top outer link **220** may include male fasteners, as described above, e.g., by which joints **210** with adjacent center links **222** and inner links **224** may be formed, and the top outer link **220** may further include an aperture **234** through which the roller **216** extends when the scissor arm **206** is assembled. The top slider **212** may be positioned at, and/or may define, the proximal end **202** of the folding robotic arm **200**, such as the top sliders **212** of each scissor arm **206**, e.g., both scissor arms **206**, may collectively define the proximal end **202**.

[0053] A bottom slider **236** may be provided opposite each top slider **212**. Thus, the bottom sliders **236**, e.g., both bottom sliders **236** of the pair of scissor arms **206**, may be located at the distal end **204** of the folding robotic arm **200**. In some embodiments, e.g., as illustrated in FIGS. **8** and **9**, the folding robotic arm **200** may also include a base plate **238**, e.g., at the distal end **204**. As will be understood by those of ordinary skill in the art, an end effector may be attached to the folding robotic arm **200** at the base plate **238**. For example, the bottom slider **236** may be coupled to one of the center links **222**, such as a bottom center link **222** via the roller **248**. The bottom slider **236** may include a bracket **240**, e.g., with a slot **242** defined in and through the outer bracket **240** of the bottom slider **236**. For example, a roller **248** of the bottom slider **236** may extend through one of the holes **232** in the bottom center link **222** when the scissor arm **206** is assembled. A bottom outer link **224** may include an aperture **244** and the bottom outer link **224** may be attached to the bottom slider **236**, such as at a non-sliding pivot joint, e.g., a revolute joint with only a single degree of freedom of motion, via the aperture **244** in the bottom outer link **224**.

[0054] As illustrated in FIGS. **8** and **9**, the folding robotic arm **200** may include an actuator **250**, and the actuator **250** may be configured to move the folding robotic arm **200** between the retracted position, e.g., FIG. **8**, and the extended position, e.g., FIG. **9**. The actuator **250** may move within a single degree of freedom to move the folding robotic arm **200** between the retracted position and the extended position. For example, the actuator **250** may be or include a motor, such as a DC motor, e.g., a brushless DC motor, a stepper motor, or a servo motor. Any suitable motor may be provided, such as a motor which has a high holding torque to overcome the weight of the folding robotic arm **200** and an external object, such as a sample acquired using the folding robotic arm **200**. Preferably, the motor may have a high torque and low speed, or may provide precision control of the position of the folding robotic arm **200**.

[0055] In some embodiments, the single degree of freedom of the actuator **250** may correspond to a rotation, e.g., the actuator **250** may rotate within and along a single direction of rotation to extend the folding robotic arm **200** and may rotate within and along a directly opposite direction of rotation to retract the folding robotic arm **200**. For example, as illustrated in FIGS. **8** and **9**, the actuator **250** may be coupled to one of the plurality of links **208** of one or both of the scissor arms **206** which comprise the folding robotic arm **200** in the exemplary embodiment illustrated in FIGS. **8** and **9**. In such embodiments, the actuator **250** may be configured to rotate the one link **208** in order to extend or retract the folding robotic arm **200**. In additional embodiments, the scissor arms **206** may be actuated by a linear actuator, e.g., an actuator wherein the single degree of freedom of the actuator corresponds to a linear translation. For example, the linear actuator may push or pull the bottom links or top links in a generally horizontal direction, whereupon the respective link or links slides within the corresponding slot of the top slider or bottom slider to extend or retract the folding robotic arm **200**.

[0056] In some embodiments, the UAV **100** may also include a shell **300**. For example, the shell **300** is illustrated in combination with an embodiment of the folding robotic arm **200** in FIGS. **10** through **18**. However, it should be understood that the shell **300** is not limited to any particular arm configuration and may be provided in combination with any of the exemplary folding robotic arms **200** disclosed herein. The shell **300** may protect the folding robotic arm **200** during flight, and may improve the aerodynamics of the UAV **100** with the folding robotic arm **200** attached, such as by providing a smooth exterior surface with reduced wind resistance as compared to the folded arm **200**. The shell **300** may be mounted to the lower side **106** of the body **102** of the UAV **100**.

[0057] As may be seen, e.g., in FIGS. **10** and **11**, in embodiments where the shell **300** is provided, the folding robotic arm **200** may be disposed within the shell **300**, e.g., when the folding robotic arm **200** is in the retracted position, the folding robotic arm **200** may be fully within and entirely enclosed by the shell **300**, such as fully enclosed on all sides by the shell **300** in cooperation with the body **102** of the UAV **100**. In some embodiments, the folding robotic arm **200** may be generally enclosed within the shell **300** when the shell **300** is closed and the folding robotic arm **200** is retracted, such as at least ninety percent of the folding robotic arm **200** may be inside the shell **300**. The shell **300** may be positioned below and around the folding robotic arm **200** when the folding robotic arm **200** is in the retracted position. For example, the shell **300** is illustrated in dashed lines in FIG. **11**, such that the folding robotic arm **200** therein is thus visible in FIG. **11**.

[0058] FIGS. **12** and **13** illustrate the exemplary folding robotic arm **200** and shell **300** moving at the same time as the folding robotic arm **200** transitions from the retracted position (FIGS. **10** and **11**), through a series of intermediate positions such as the intermediate position depicted in FIG. **12**, to the extended position (FIG. **13**). The shell **300** may be coupled to an opening mechanism **302**, and the opening mechanism **302** may also be coupled to the actuator **250**, such that the shell **300** opens as the folding robotic arm **200** extends and closes as the folding robotic arm **200** retracts. For example, the shell **300** may include a first segment **301** and a second segment **303**, and each segment **301**, **303** may include a bracket **304**, **306** thereon. The opening mechanism **302** may include a cross bar **308** which extends through each bracket **304** and **306**. The cross bar **308** may be coupled to an opening link **310**, and the opening link **310** may be coupled to a base slider **312**. In such embodiments, the actuator **250** may be a linear actuator, and may move the base slider **312** in a generally horizontal direction to both extend or retract the folding robotic arm **200** and open or close the shell **300** at the same time. The opening mechanism **302** may further include an opening clip **316** coupled to an end of the base slider **312** and the opening link **310** may be coupled to and extend between the opening clip **316** and the cross bar **308**.

[0059] Referring now to FIGS. **14** through **18**, in some embodiments, the folding robotic arm **200** may include a mounting plate **252**, e.g., at the proximal end **202** of the folding robotic arm **200**, which maybe mounted directly to and in contact with the lower side **106** (FIGS. **2-6**) of the body **102** of the UAV **100**. The exemplary embodiment of the folding robotic arm **200** illustrated in FIGS. **14** through **17** also includes a housing **254** on the mounting plate **252**. The actuator **250** is not specifically illustrated in FIGS. **14** through **17**, where those of ordinary skill in the art will recognize that the actuator **250** may be positioned within the housing **254**. A base mount **256** may couple the folding robotic arm **200** to the mounting plate **252** within the housing **254**. The base slider **312** which actuates the folding robotic arm **200**, and may also actuate the shell **300** in embodiments where the shell **300** is provided as described above, may be positioned within the housing **254**, above the base mount **256** and below the mounting plate **252**.

[0060] Still referring to FIGS. **14** through **18**, in some embodiments, the folding robotic arm **200** may comprise two links, e.g., an upper link **258** and a lower link **260** joined to the upper link **258**, e.g., at a revolute joint located at approximately a mid point of the folding robotic arm **200**. The upper link **258** may be joined to the base mount **256** at a first end of the upper link **258**, such as by a rotational joint. The upper link **258** may be joined to a first end of the lower link **260** at a second, opposite, end of the upper link **258**, also by a rotational joint. Any suitable end effector may be joined to a second, opposite, end of the lower link **260**. Movement, e.g., folding and unfolding or extension and retraction, of the folding robotic arm **200** may be assisted by an outer slider **262**. The upper link **258** may be connected to the base slider **312** by a base slider link **314**. An outer slider link **264** may connect to and extend between the outer slider **262** at a first end and the lower link **260** at a second end opposite the first end of the outer slider link **264**. A push link **266** may connect to and extend between the outer slider **262** at a first end and the upper link **258** at a second end opposite the first end of the push link **266**. In such embodiments, the upper link **258** and the lower link **260** may be parallel or approximately parallel in the retracted, folded, position (see, e.g., FIGS. **11** and **14**) and may form an angle of less than one hundred eighty degrees in the extended, unfolded, position (see, e.g., FIGS. **13**, **15**, and **16**). For example, an extended position angle of more than one hundred thirty-five degrees and less than one hundred eighty degrees may advantageously promote simpler actuation of the folding robotic arm **200**, e.g., by avoiding a singularity in the mechanism. Also by way of example, the upper link **258** and the lower link **260** being parallel or approximately parallel in the retracted, folded, position may advantageously minimize the volume of space occupied by the folding robotic arm **200** in the retracted position. In some embodiments, one or more biasing elements, e.g. springs, may be incorporated into the folding robotic arm **200** and/or shell **300** to promote movement such as opening or closing the shell **300** and/or folding and unfolding the arm **200**.

[0061] Referring now to FIGS. **19** through **21**, in some embodiments, the folding robotic arm **200** may include one or more Sarrus linkages **268**, such as four Sarrus linkages **268** each coupled to a respective side of an end plate **270** of the folding robotic arm **200** at the distal end **204** of the folding robotic arm **200**. Further, any suitable end effector as desired for a particular application of the folding robotic arm **200** may be mounted at the end plate **270**. Each Sarrus linkage **268** may include one or more pairs of links **272**, e.g., plates as in the illustrated exemplary embodiments of FIGS. **19** through **21**, which are hingedly joined by a respective hinge pin **274** and hinge pin nut **276**. In such embodiments, the folding robotic arm **200** may be biased to or towards the extended position, such as by one or more biasing elements **278**, e.g., coil springs. A biasing element **278** may be provided at some or all of the hinge joints between the links **272** of the Sarrus linkages **268**.

[0062] Still with reference to FIGS. **19** through **21**, in such embodiments, the folding robotic arm **200** may be linearly actuated. For example, the actuator **250** may be or include a pulley and motor. A tether **280** may be coupled to the actuator **250** at a first end of the tether **280** and may be coupled to the end plate **270** at a second end of the tether **280** opposite the first end of the tether **280**. Accordingly, to retract or fold the folding robotic arm **200** in such embodiments, the actuator **250** may pull the tether **280** along a straight line, e.g., generally perpendicular to the end plate **270** such as upwards towards the body **102** of the UAV **100**, to overcome the force of the biasing element(s) **278**. Thus, the folding robotic arm **200** may collapse to the folded, retracted position. As may be seen for example in FIG. **20**, the folded, retracted position of the folding robotic arm **200** is illustrated in solid lines, whereas the extended position and several intermediate positions are illustrated in dashed lines.

[0063] One or more brace plates **282** may be provided between the end plate **270** and the actuator **250**. The one or more brace plates **282** may promote or enhance the lateral stability of the folding robotic arm **200**, such as by cross linking two or more Sarrus linkages **268** together. The brace plates **282** may comprise a plurality of sides, such as a plurality of sides which corresponds in number to the Sarrus linkages **268**, e.g., the brace plate(s) **282** may include four sides and each of the four sides may be coupled to a corresponding one of the four Sarrus linkages as in the illustrated exemplary embodiment. The brace plate **282** (or each

brace plate **282** in embodiments where more than one brace plate **282** is provided) may also include a central aperture **284**, such as the tether **280** may extend through each brace plate **282** via the central aperture **284** thereof.

[0064] In some exemplary embodiments, the folding robotic arm **200** may be positioned and oriented at an oblique angle to the body **102** of the UAV **100**, such as the folding robotic arm **200** may fold and unfold along a single linear direction or axis, and the single linear direction or axis may be oriented along an angle that is oblique to the vertical direction and/or oblique to the body **102** of the UAV **100**. For example, as illustrated in FIGS. **22** and **23**, the proximal end **202** of the folding robotic arm **200** may include an angled mounting bracket **288**. In such embodiments, the angled mounting bracket **288** may include a first plate **290**, e.g., an upper plate, which may be configured to attach directly to the lower side **106** of the body **102** of the UAV **100**. Thus, the first plate **290** may be approximately parallel to the lower side **106** of the body **102** of the UAV **100**, such as may be approximately parallel to a horizontal direction and/or approximately perpendicular to the vertical direction. The angled mounting bracket **288** may also include a second plate **292**, and the second plate **292** may be joined to the first plate **290** at an edge of the plates **290**, **292**. The second plate **292** may be oriented at an angle to the first plate **290**, such as at an oblique angle. The remainder of the folding robotic arm **200** may extend from the second plate **292** of the angled mounting bracket **288**, thereby orienting the folding robotic arm **200** substantially at an oblique angle to the UAV **100**, e.g., whereby the folding robotic arm **200** extends and retracts (folds and unfolds) along a single linear direction or axis that is oblique to the vertical direction and/or oblique to the main body **102** of the UAV **100**.

[0065] The present disclosure provides numerous advantages as will be appreciated by those of ordinary skill in the art. For example, the folding robotic arm **200** may be actuated by a single actuator **250**, thereby reducing the complexity, weight, and power consumption of the folding robotic arm **200**, e.g., as compared to more complex articulators or arms which include multiple actuators. Additionally, the actuator may also move in a singe degree of freedom of motion and such limited motion of the actuator may also promote improved weight and power consumption. It is to be understood that the foregoing advantages are provided by way of example only and without limitation.

[0066] This written description uses examples to disclose the invention, including the best mode, and also to enable any person skilled in the art to practice the invention, including making and using any devices or systems and performing any incorporated methods. The patentable scope of the invention is defined by the claims, and may include other examples that occur to those skilled in the art. Such other examples are intended to be within the scope of the claims if they include structural elements that do not differ from the literal language of the claims, or if they include equivalent structural elements with insubstantial differences from the literal languages of the claims.

What is claimed is:

1. An unmanned aerial vehicle, comprising:

a body comprising an upper side and a lower side opposite the upper side;

at least one rotor coupled to the body, the rotor configured to generate lift in an upward direction;

an arm mounted to the lower side of the body;

an actuator coupled to the arm, the actuator configured to move the arm between a retracted position and an extended position, wherein the actuator moves within a single degree of freedom to move the arm between the retracted position and the extended position.

2. The unmanned aerial vehicle of claim **1**, wherein the single degree of freedom of the actuator corresponds to a linear translation.

3. The unmanned aerial vehicle of claim **1**, wherein the single degree of freedom of the actuator corresponds to a rotation.

4. The unmanned aerial vehicle of claim **1**, further comprising a shell mounted to the lower side of the body, wherein the arm is disposed within the shell and the shell is positioned below and around the arm when the arm is in the retracted position.

5. The unmanned aerial vehicle of claim **1**, wherein the arm is a foldable arm comprising a plurality of links.

6. The unmanned aerial vehicle of claim **5**, wherein the arm is a first scissor arm, wherein the plurality of links comprises a first set of links serially connected with each other to form the first scissor arm, further comprising a second scissor arm parallel to the first scissor arm.

7. The unmanned aerial vehicle of claim **5**, wherein the plurality of links comprises an upper link coupled to the lower side of the body at a proximal end of the upper link and a lower link coupled to a distal end of the upper link.

8. The unmanned aerial vehicle of claim **1**, wherein the arm comprises a Sarrus linkage.

9. The unmanned aerial vehicle of claim **8**, further comprising a biasing element coupled to the Sarrus linkage, the biasing element positioned and configured to bias the arm to the extended position.

10. The unmanned aerial vehicle of claim **1**, further comprising an end effector coupled to a distal end of the arm.

11. An unmanned aerial vehicle, comprising:

a body;

an arm mounted to a side of the body;

an actuator coupled to the arm, the actuator configured to move the arm between a retracted position and an extended position, wherein the actuator moves within a single degree of freedom to move the arm between the retracted position and the extended position.

12. The unmanned aerial vehicle of claim **11**, wherein the single degree of freedom of the actuator corresponds to a linear translation.

13. The unmanned aerial vehicle of claim **11**, wherein the single degree of freedom of the actuator corresponds to a rotation.

14. The unmanned aerial vehicle of claim **11**, further comprising a shell mounted to the side of the body, wherein the arm is disposed within the shell when the arm is in the retracted position.

15. The unmanned aerial vehicle of claim **11**, wherein the arm is a foldable arm comprising a plurality of links.

16. The unmanned aerial vehicle of claim **15**, wherein the arm is a first scissor arm, wherein the plurality of links comprises a first set of links serially connected with each other to form the first scissor arm, further comprising a second scissor arm parallel to the first scissor arm.

17. The unmanned aerial vehicle of claim **15**, wherein the plurality of links comprises an upper link coupled to the lower side of the body at a proximal end of the upper link and a lower link coupled to a distal end of the upper link.

18. The unmanned aerial vehicle of claim **11**, wherein the arm comprises a Sarrus linkage.

19. The unmanned aerial vehicle of claim **18**, further comprising a biasing element coupled to the Sarrus linkage, the biasing element positioned and configured to bias the arm to the extended position.

20. The unmanned aerial vehicle of claim **11**, further comprising an end effector coupled to a distal end of the arm.

* * * * *