US 20250026006A1

(19) United States
(12) Patent Application Publication
DEEMYAD et al.
(10) Pub. No.: US 2025/0026006 A1
(43) Pub. Date: Jan. 23, 2025

(54) **DRONE MECHANISM INCLUDING FOLDABLE ARM AND COMPRESSIBLE GRIPPER**

(71) Applicant: **IDAHO STATE UNIVERSITY**, POCATELLO, ID (US)

(72) Inventors: **TAHER DEEMYAD**, POCATELLO, ID (US); **Kyler Bingham**, IDAHO FALLS, ID (US); **Matthew Hessler**, Denver, CO (US); **Safal Lama**, Pocatello, ID (US); **CHRISTOPHER ZAKREVSKI**, IDAHO FALLS, ID (US)

(21) Appl. No.: **18/768,507**

(22) Filed: **Jul. 10, 2024**

Related U.S. Application Data

(60) Provisional application No. 63/644,579, filed on May 9, 2024, provisional application No. 63/514,467, filed on Jul. 19, 2023.

Publication Classification

(51) **Int. Cl.**

B25J 9/10	(2006.01)
B25J 15/02	(2006.01)
B64U 60/50	(2006.01)
B64U 101/00	(2006.01)

(52) **U.S. Cl.**

CPC ***B25J 9/107*** (2013.01); ***B25J 15/0213*** (2013.01); *B64U 60/50* (2023.01); *B64U 2101/00* (2023.01)

(57) **ABSTRACT**

An unmanned aerial vehicle includes a body. The body has an upper side and a lower side opposite the upper side. At least one rotor is coupled to the body to generate lift in an upward direction. A mechanism is mounted to the lower side of the body. The mechanism includes a landing gear, a storage system, a robotic arm housing, a counterweight housing, a robotic arm, an actuator, and an end effector. The actuator is coupled to the robotic arm to move the robotic arm between a retracted position and an extended position. The end effector is coupled to the distal end of the robotic arm. The end effector includes a gripper with a pair of opposing compressible elements for gripping an object between the pair of compressible elements.

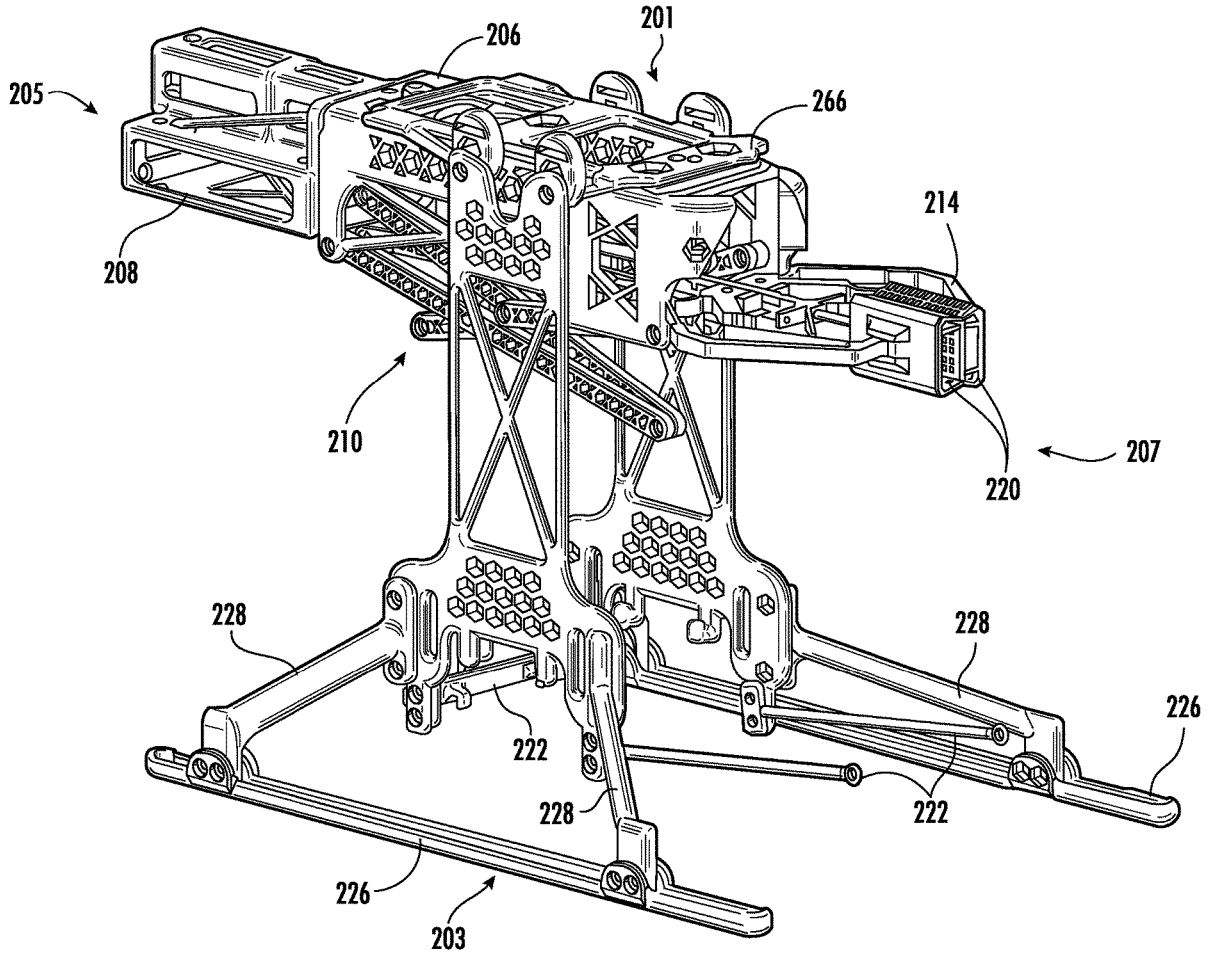

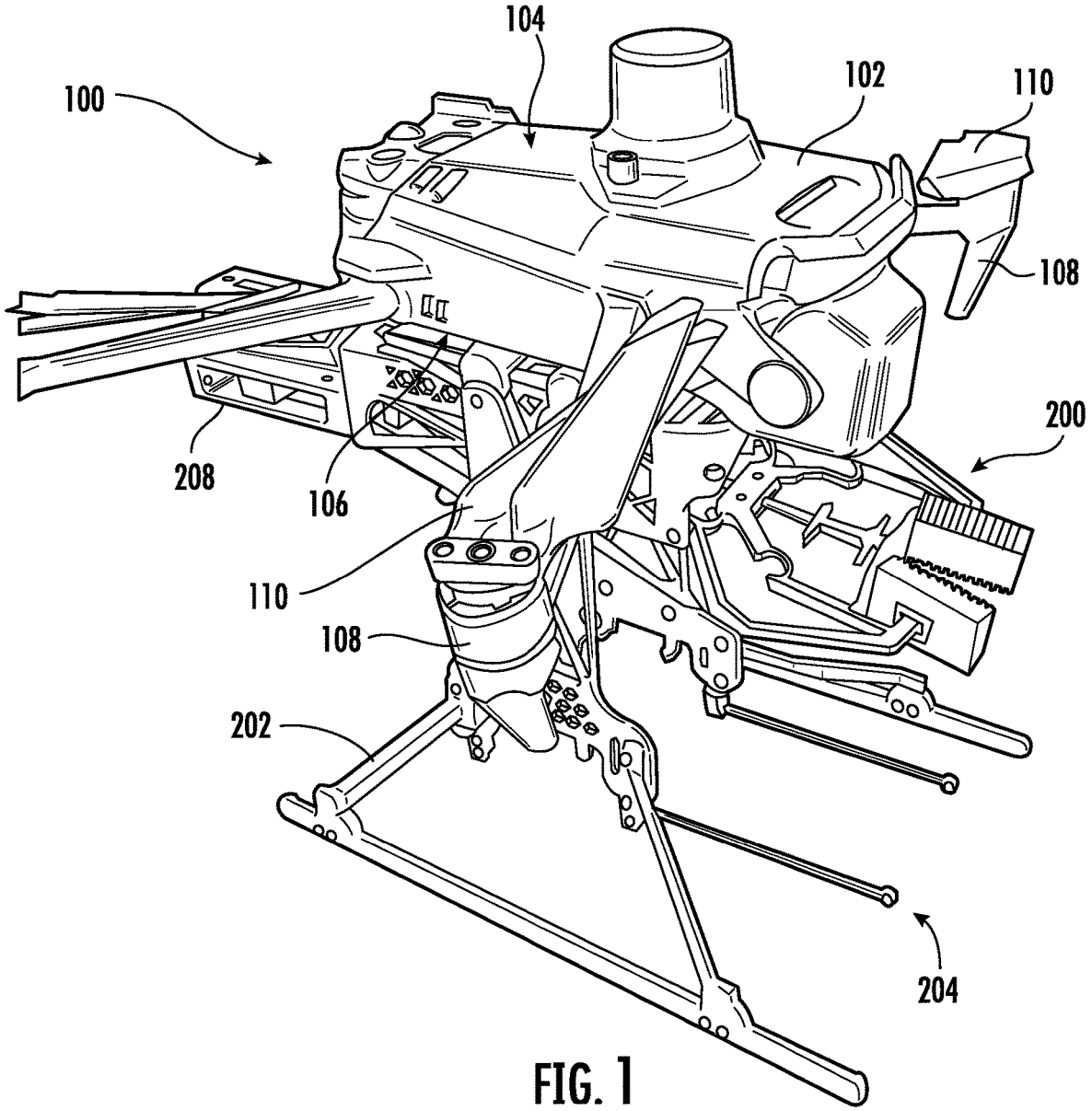

FIG. 1

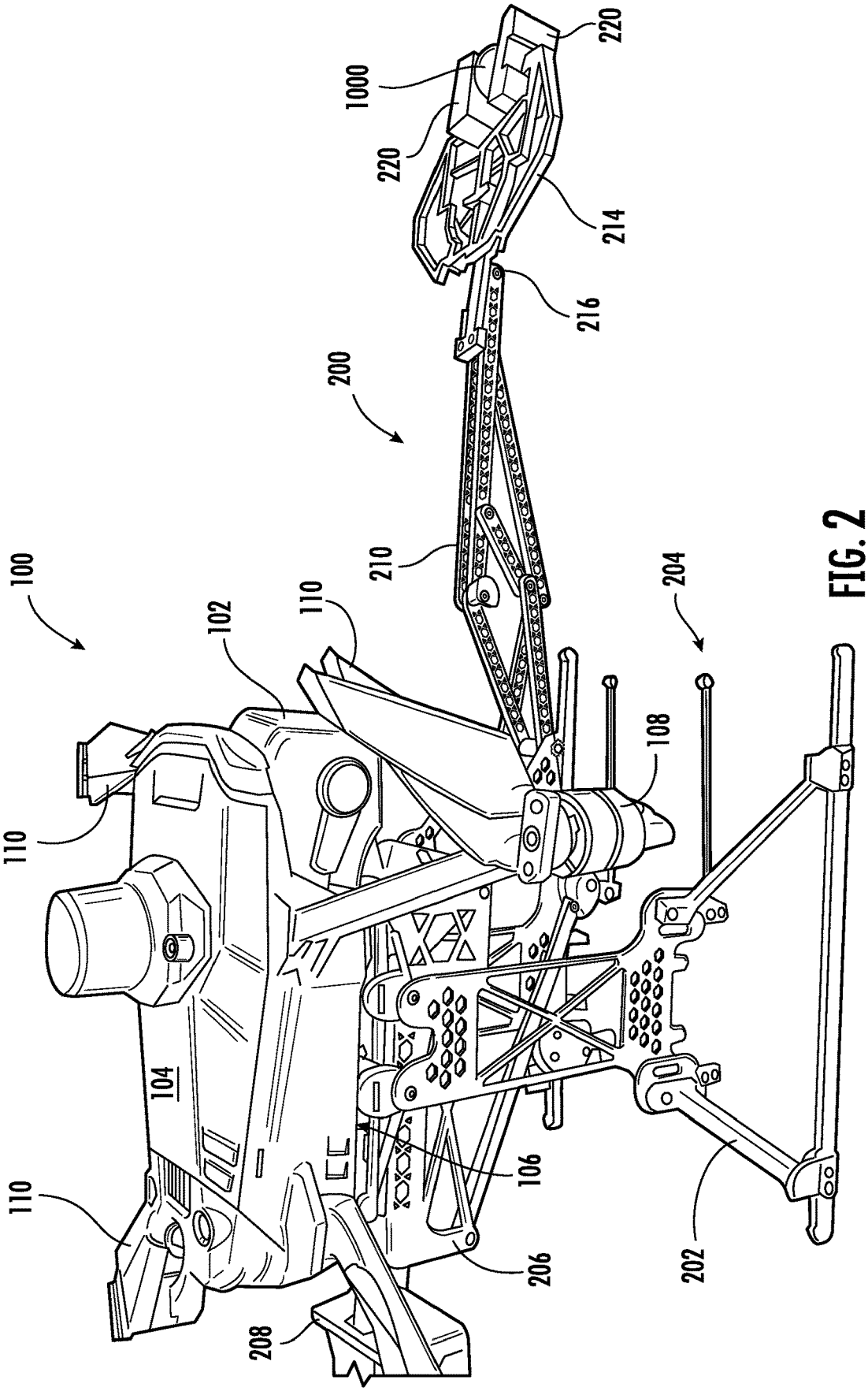
100
102
110
110
110
104
208
206
106
202
108
204
210
200
216
214
220
220
1000

FIG. 2

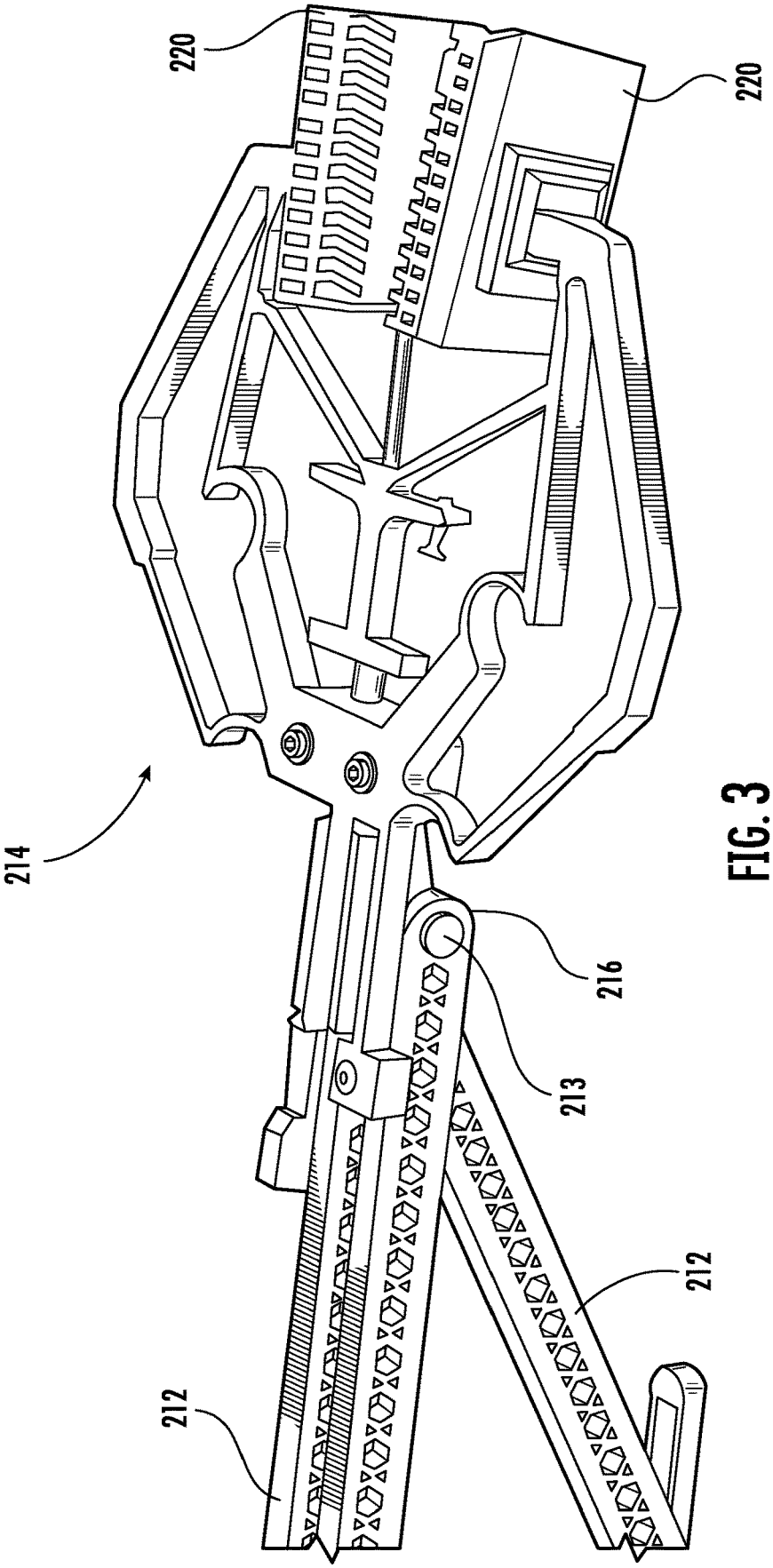

FIG. 3

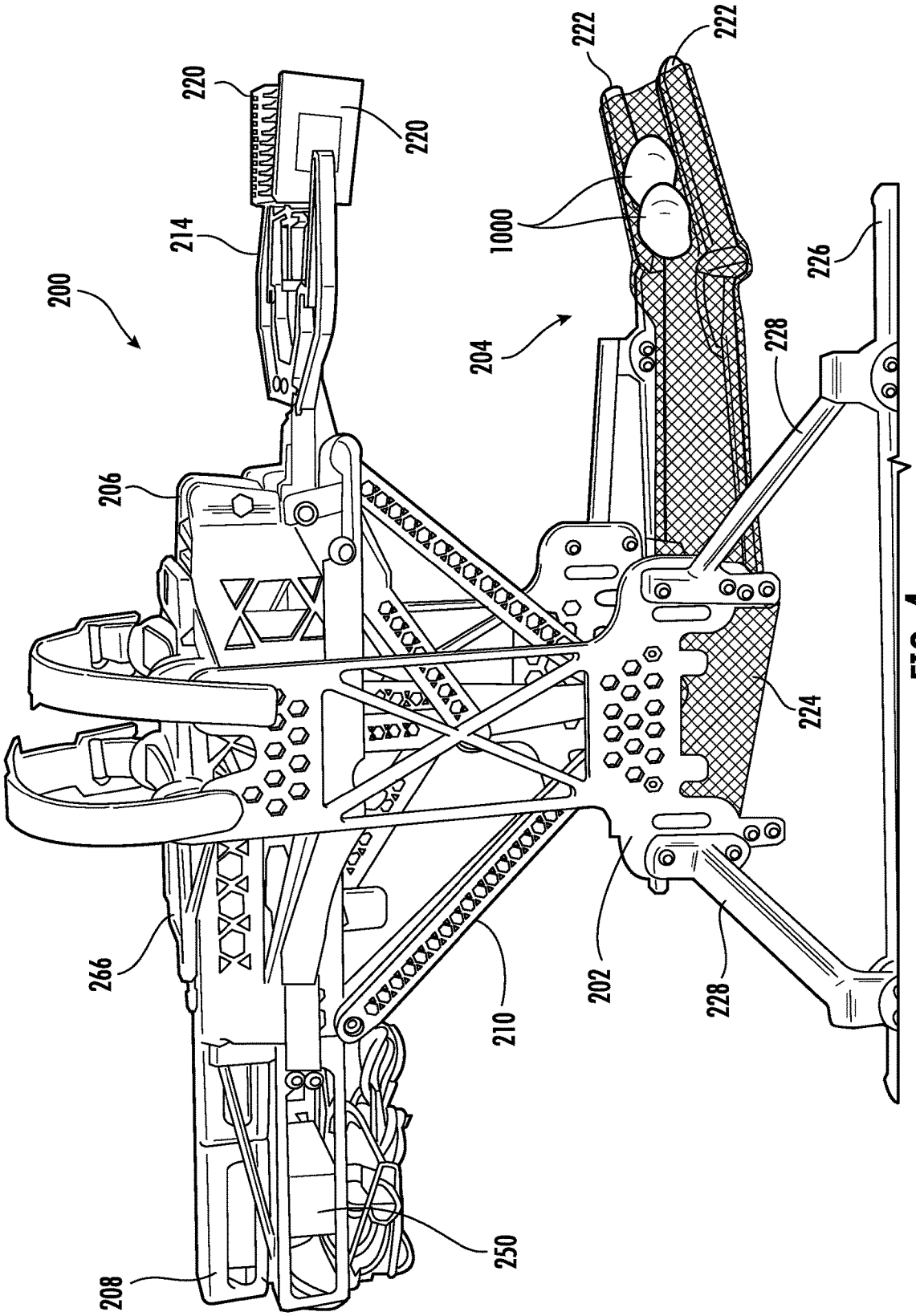
200
206
266
208
250
210
202
228
224
204
1000
222
222
228
226
214
220
220

FIG. 4

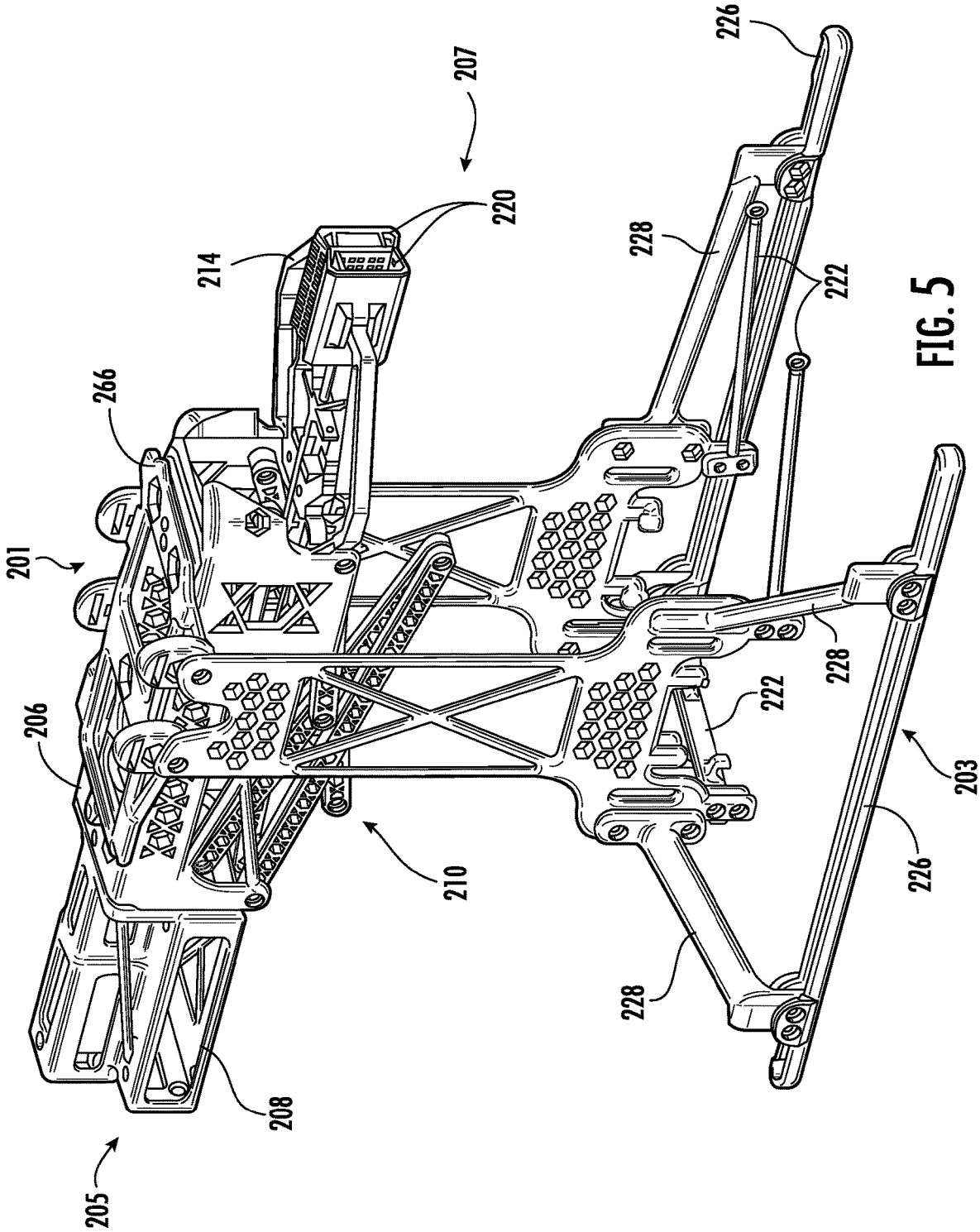
207
220
214
266
201
206
205
208
210
226
228
222
228
222
203
226
228

FIG. 5

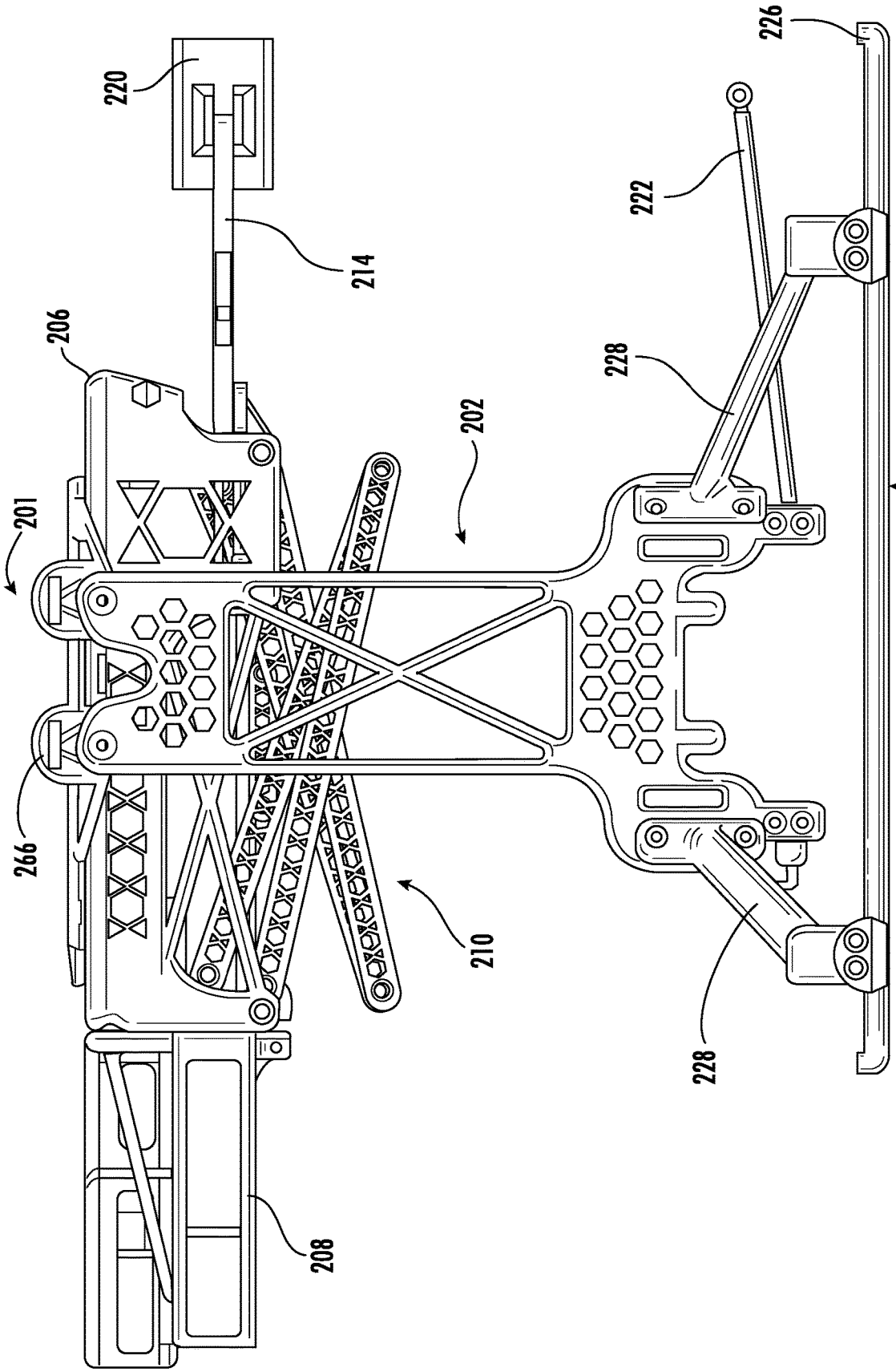

FIG. 6

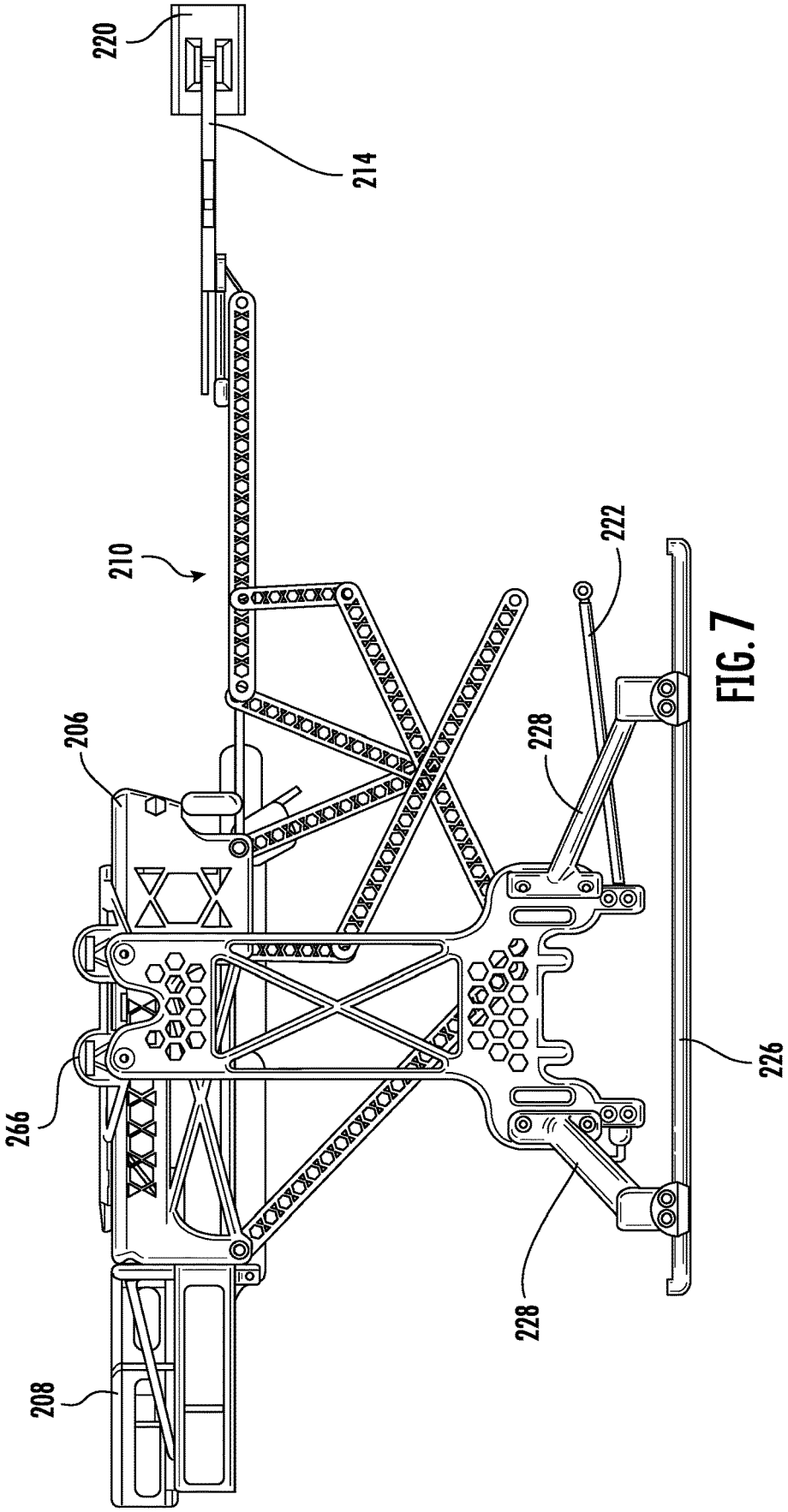

FIG. 7

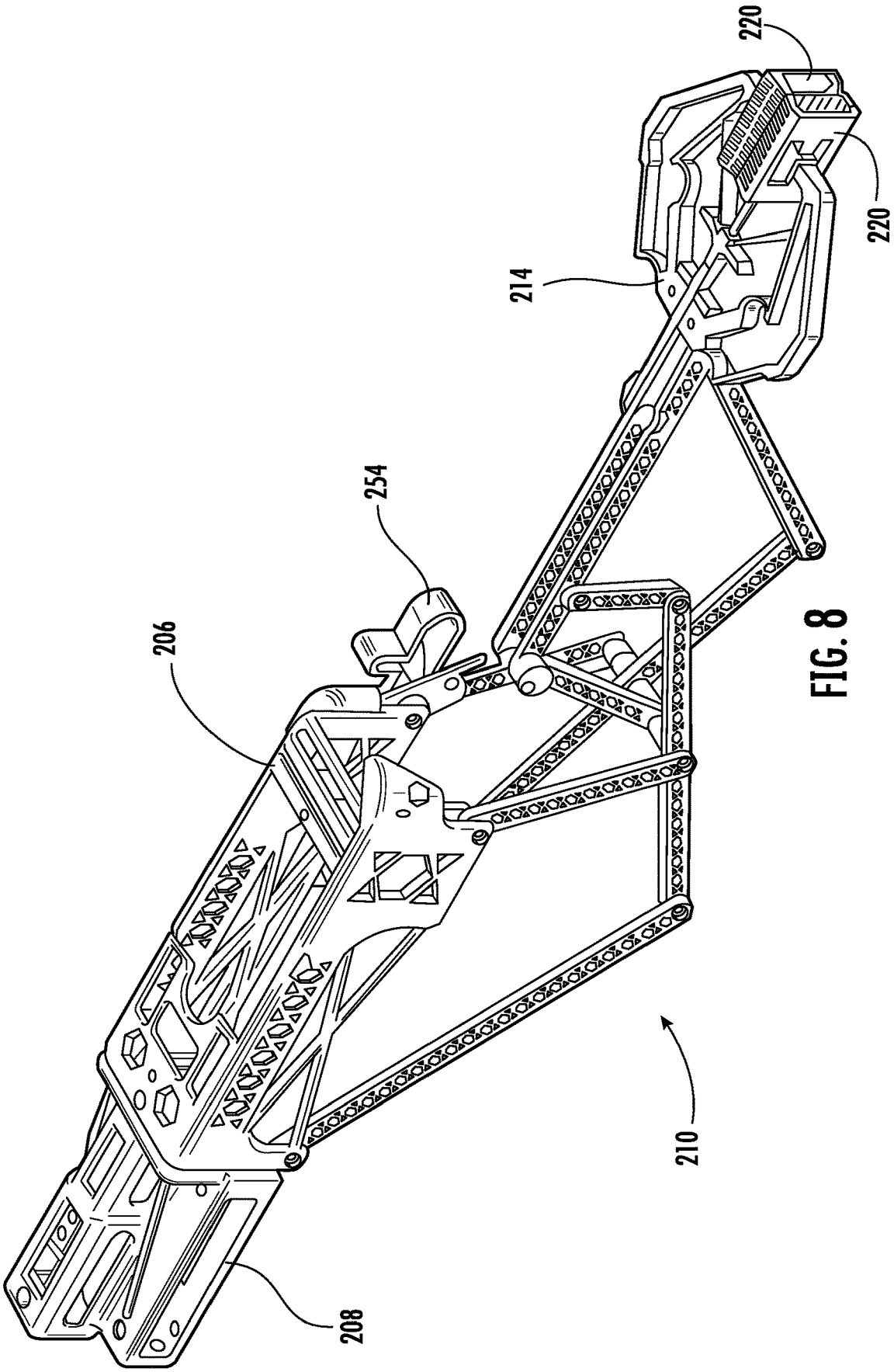

FIG. 8

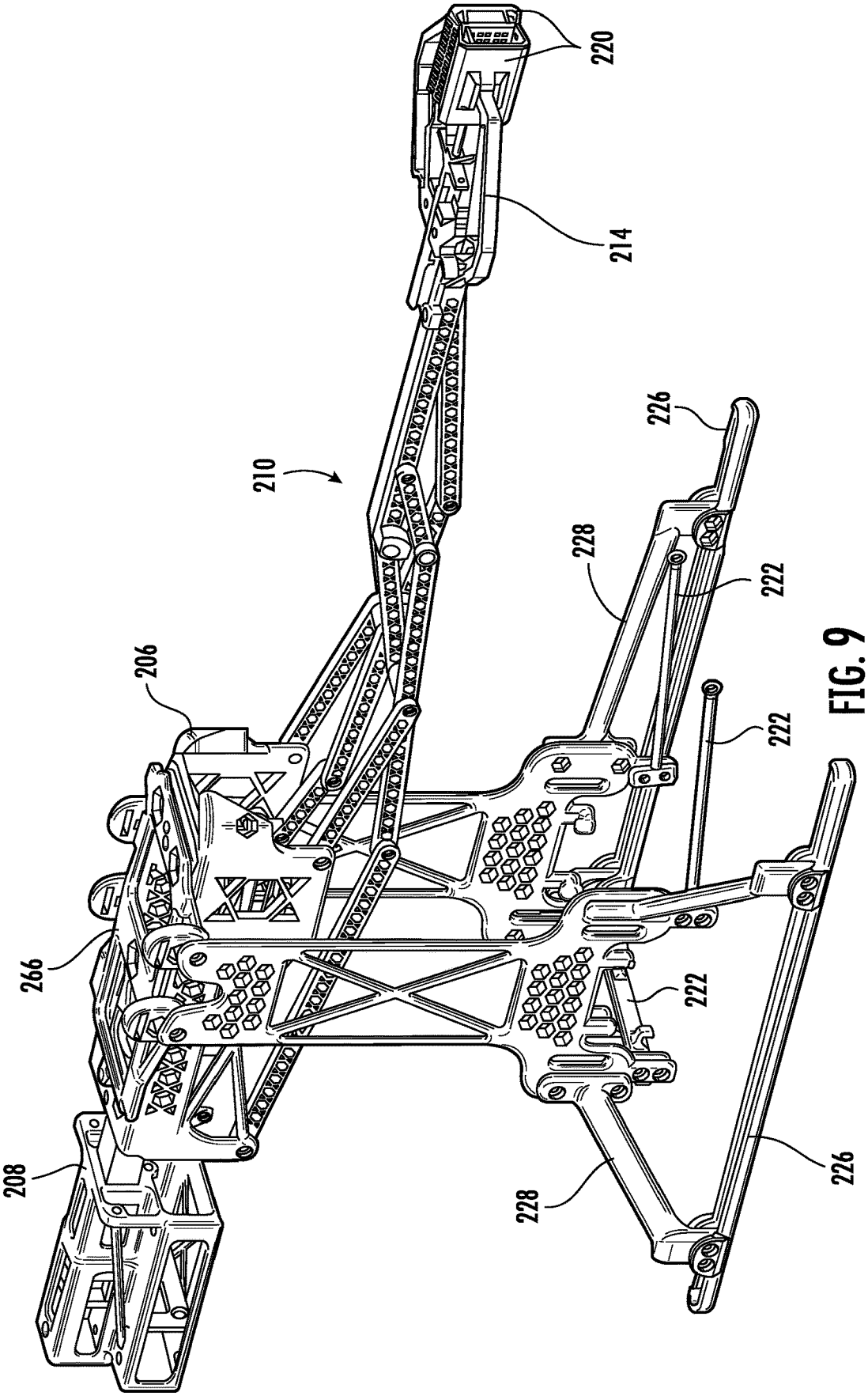

FIG. 9

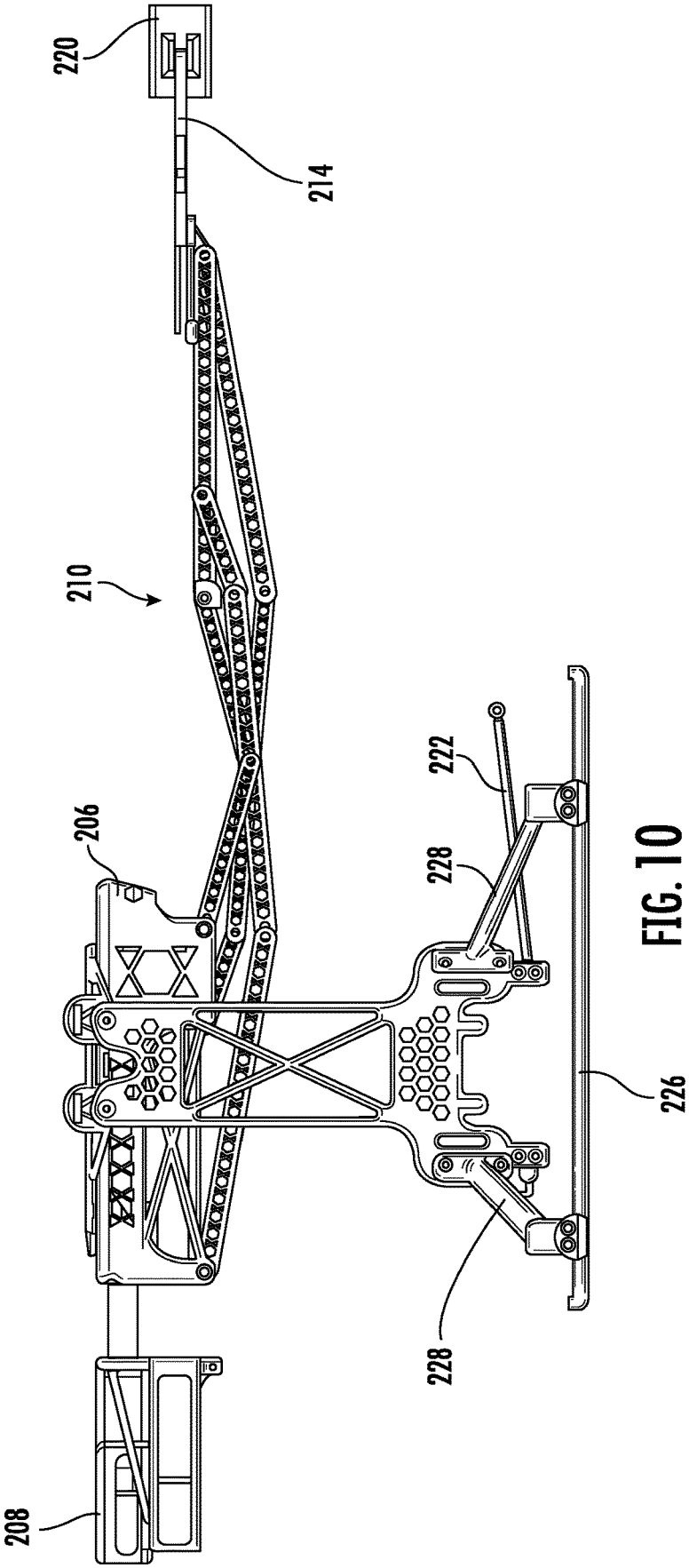

FIG. 10

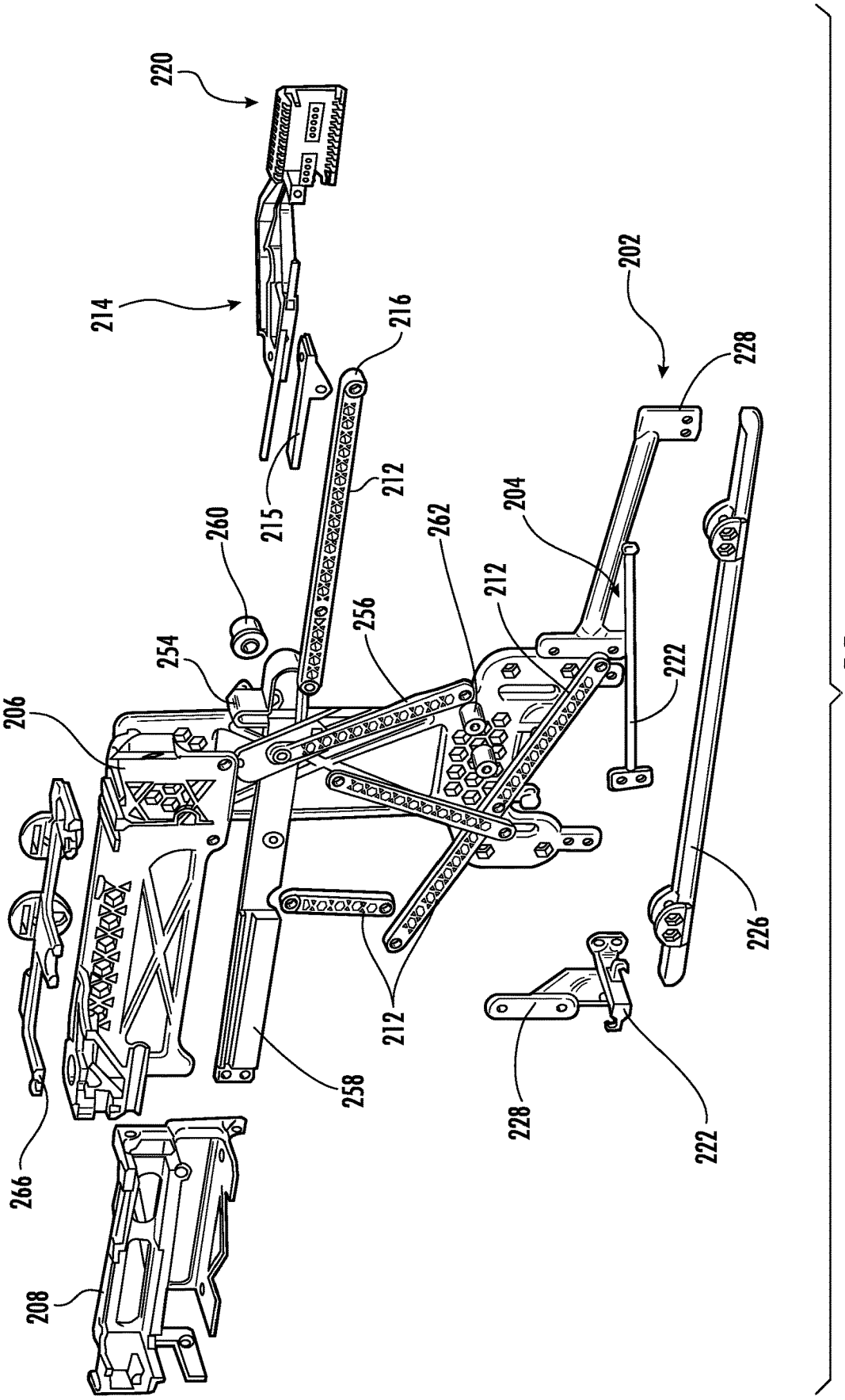
220
214
216
215
212
260
254
206
256
262
212
204
202
228
222
226
212
258
266
208
228
222

FIG. 11

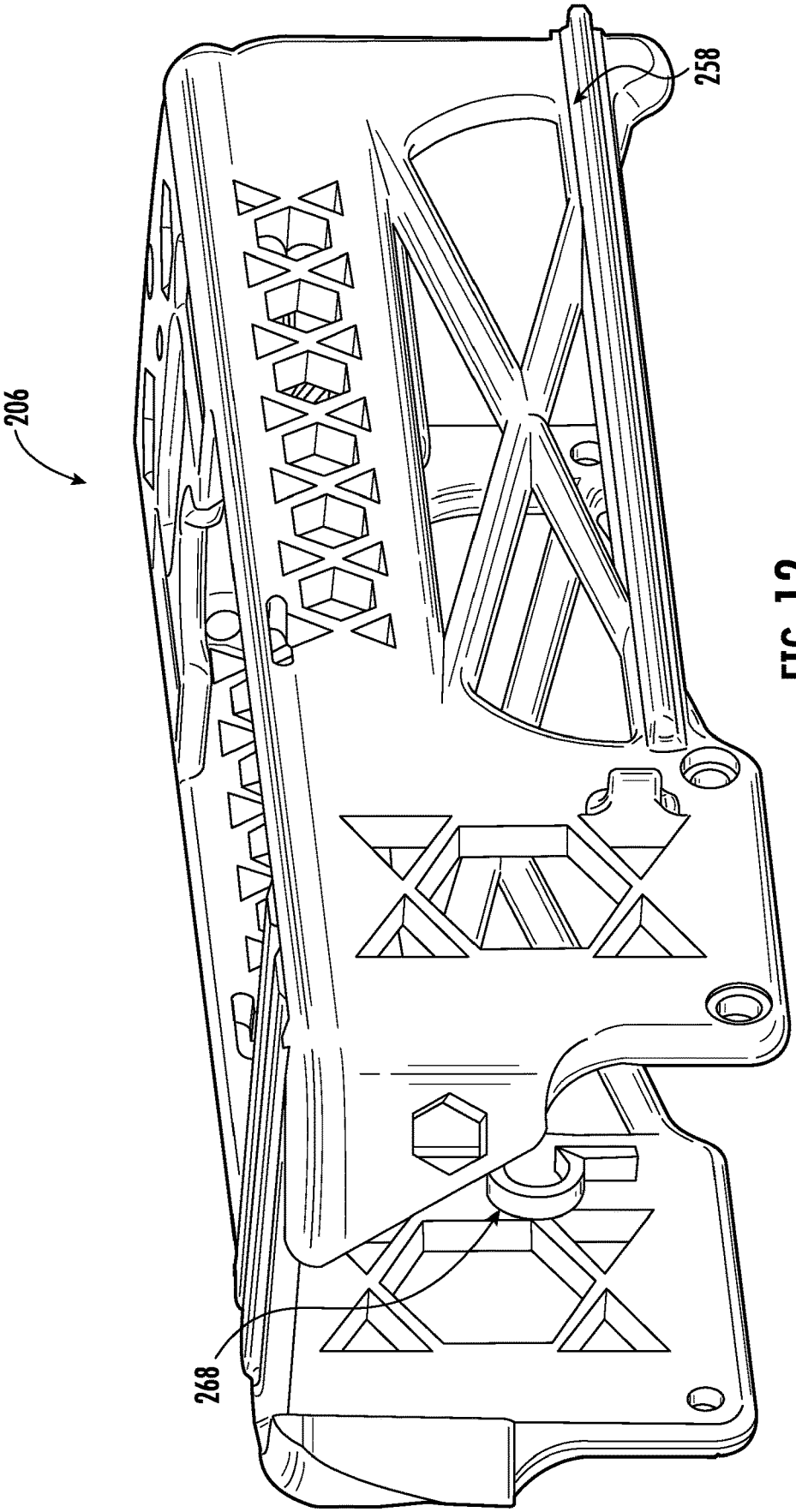

FIG. 12

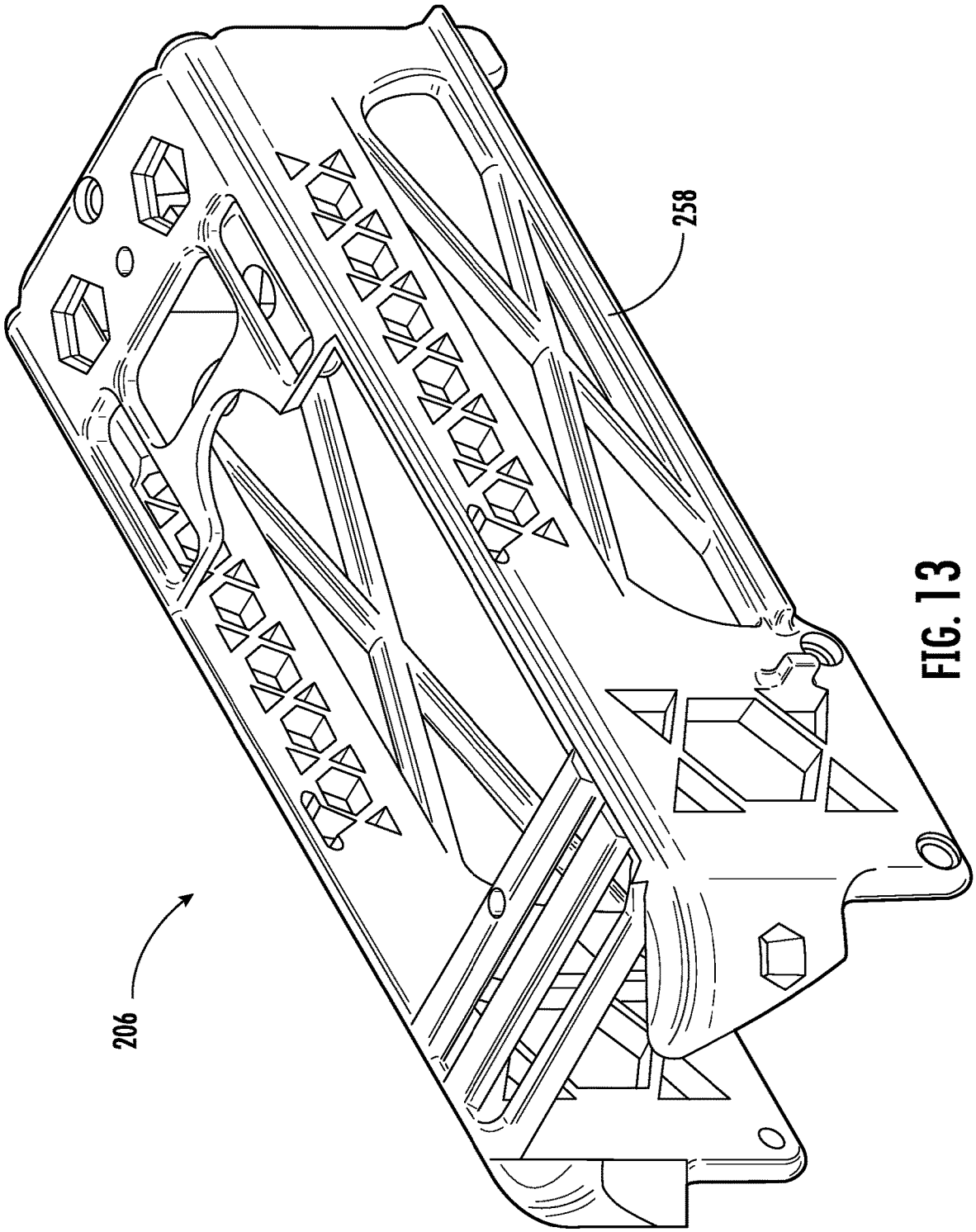

FIG. 13

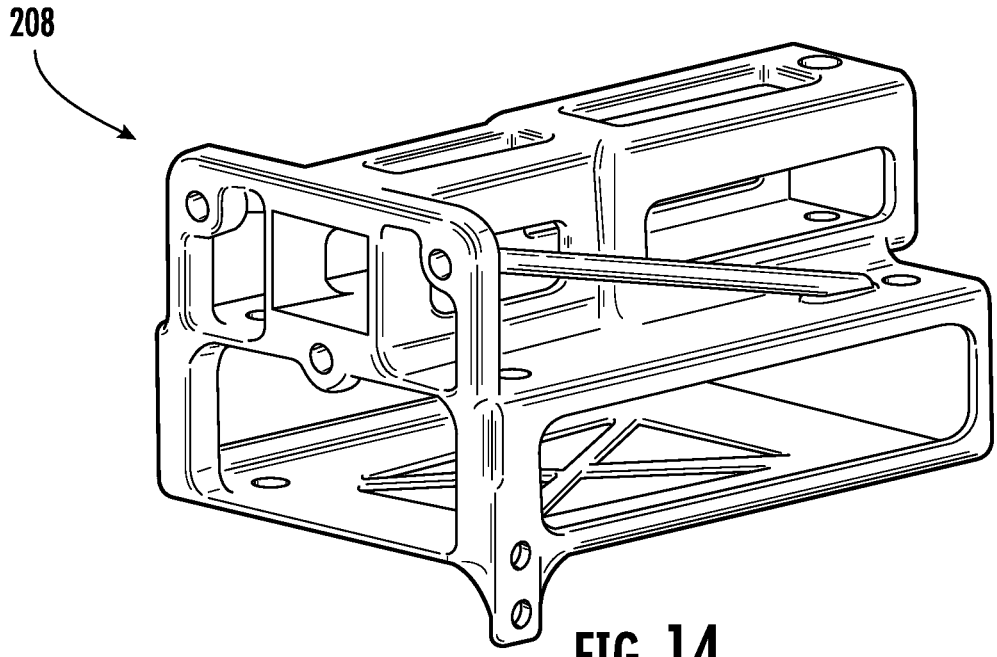

FIG. 14

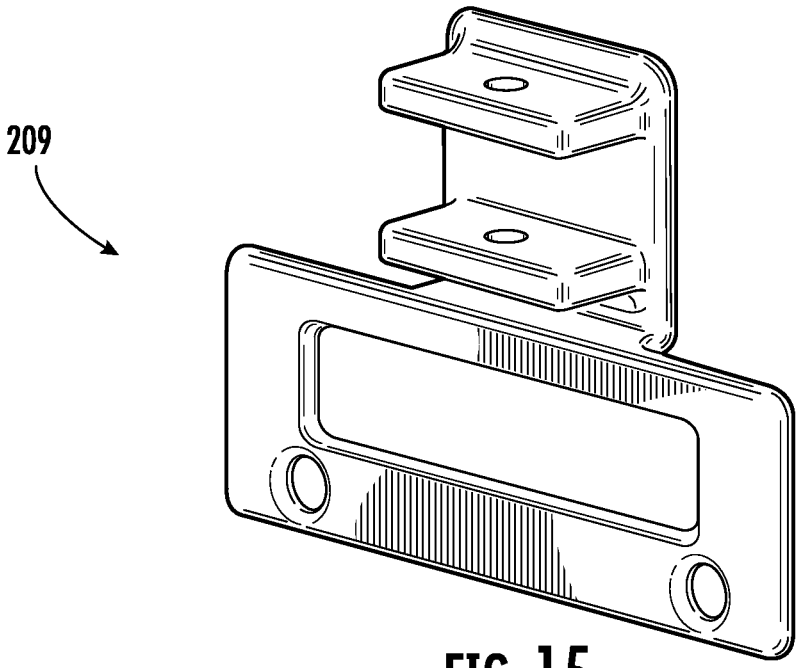

FIG. 15

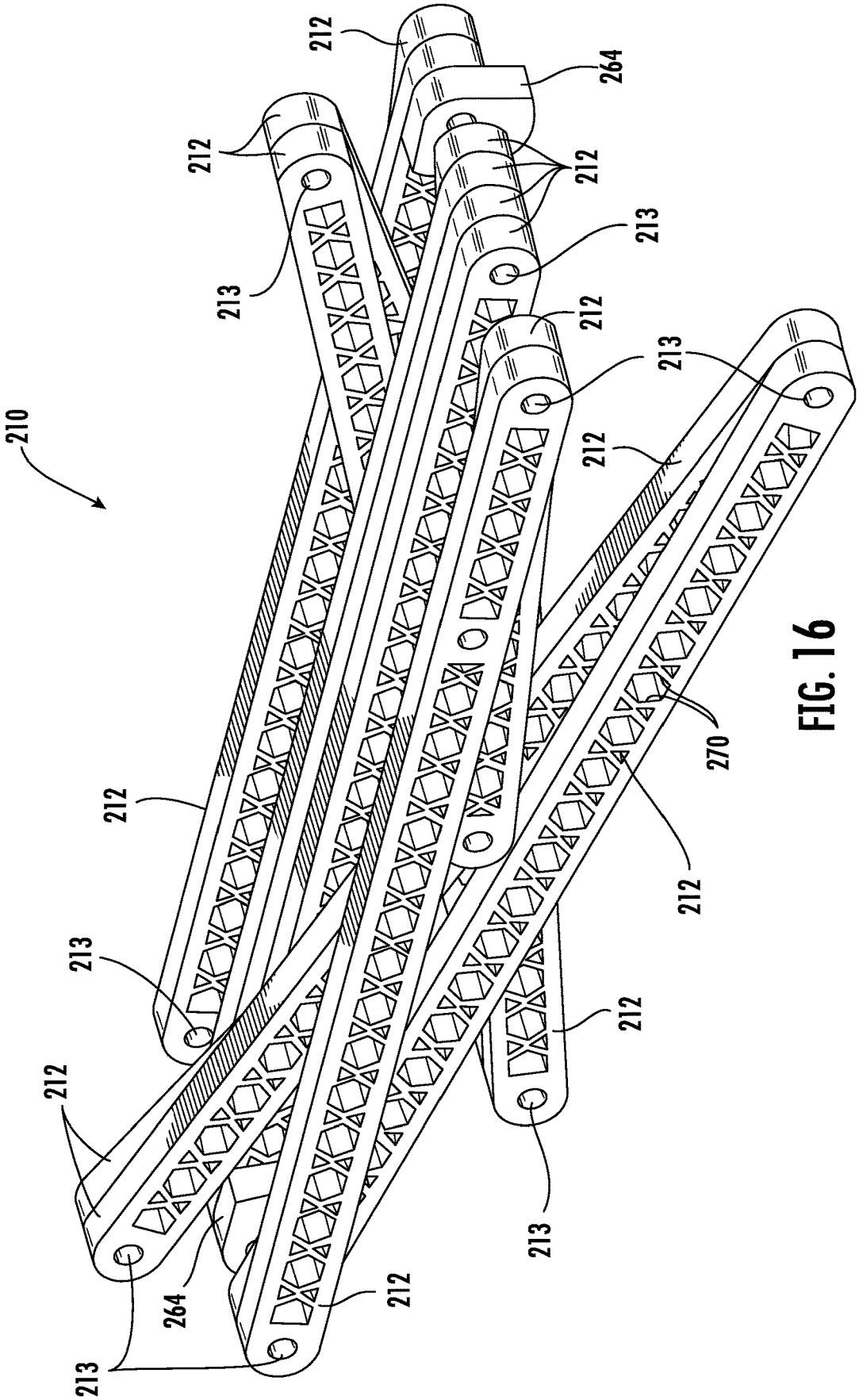

FIG. 16

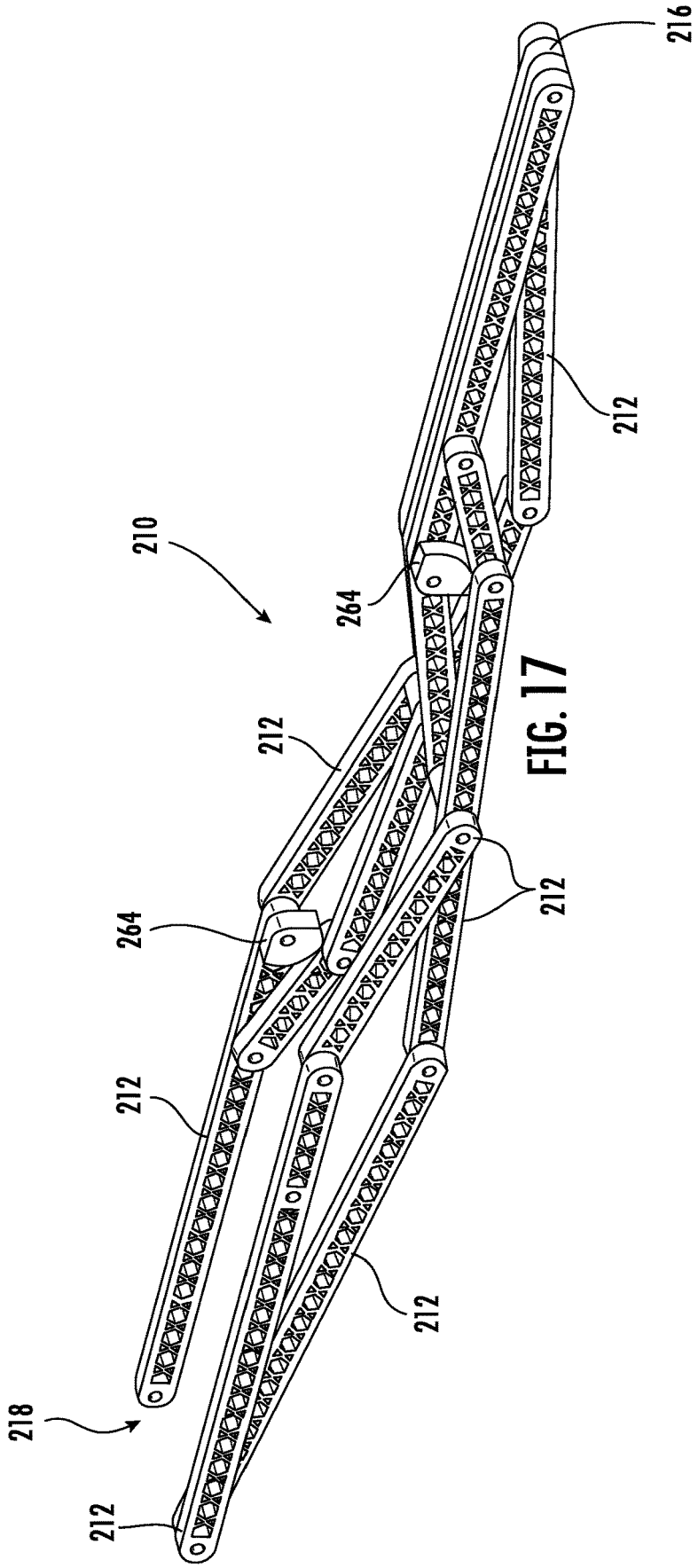

FIG. 17

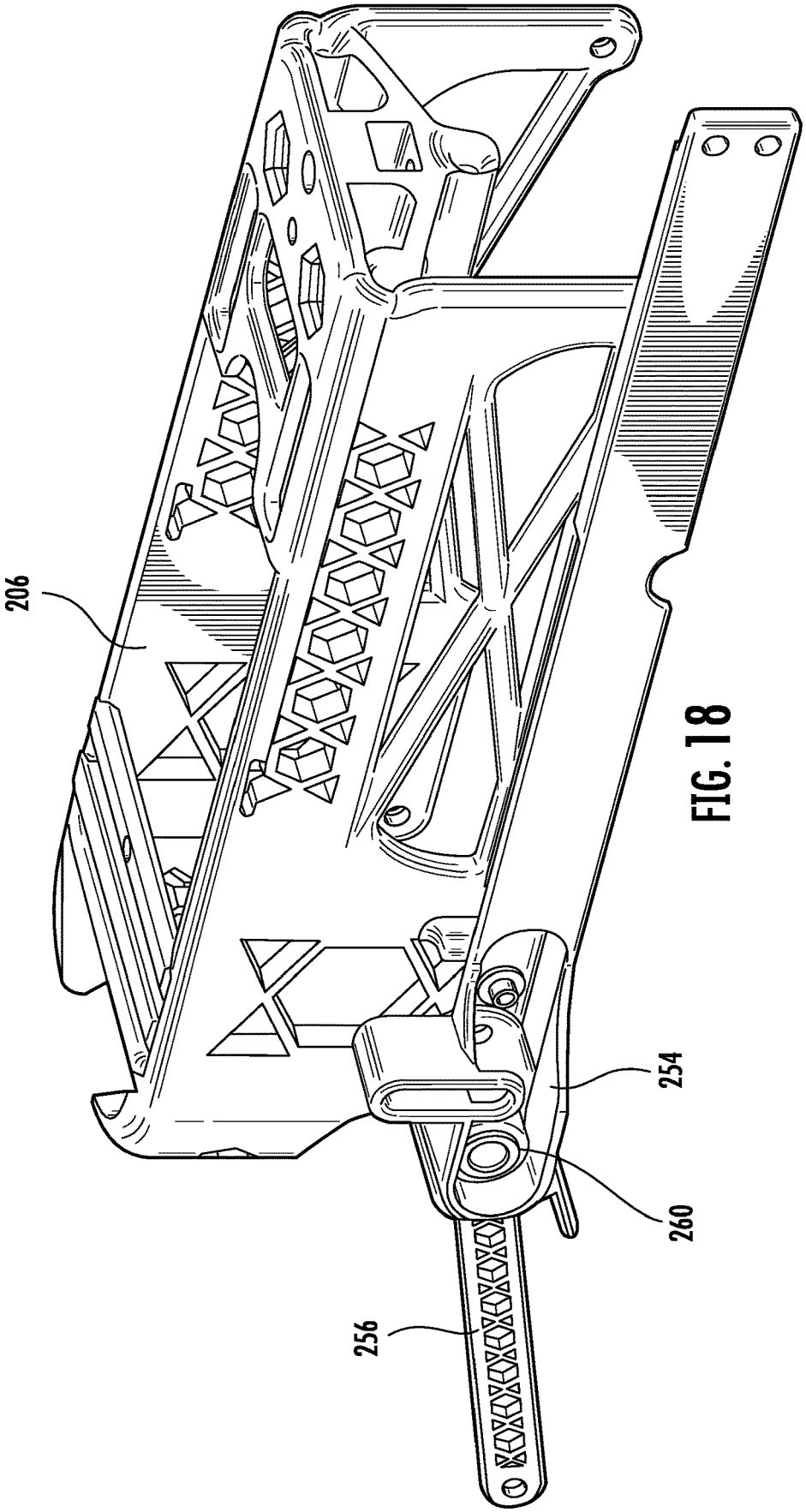

FIG. 18

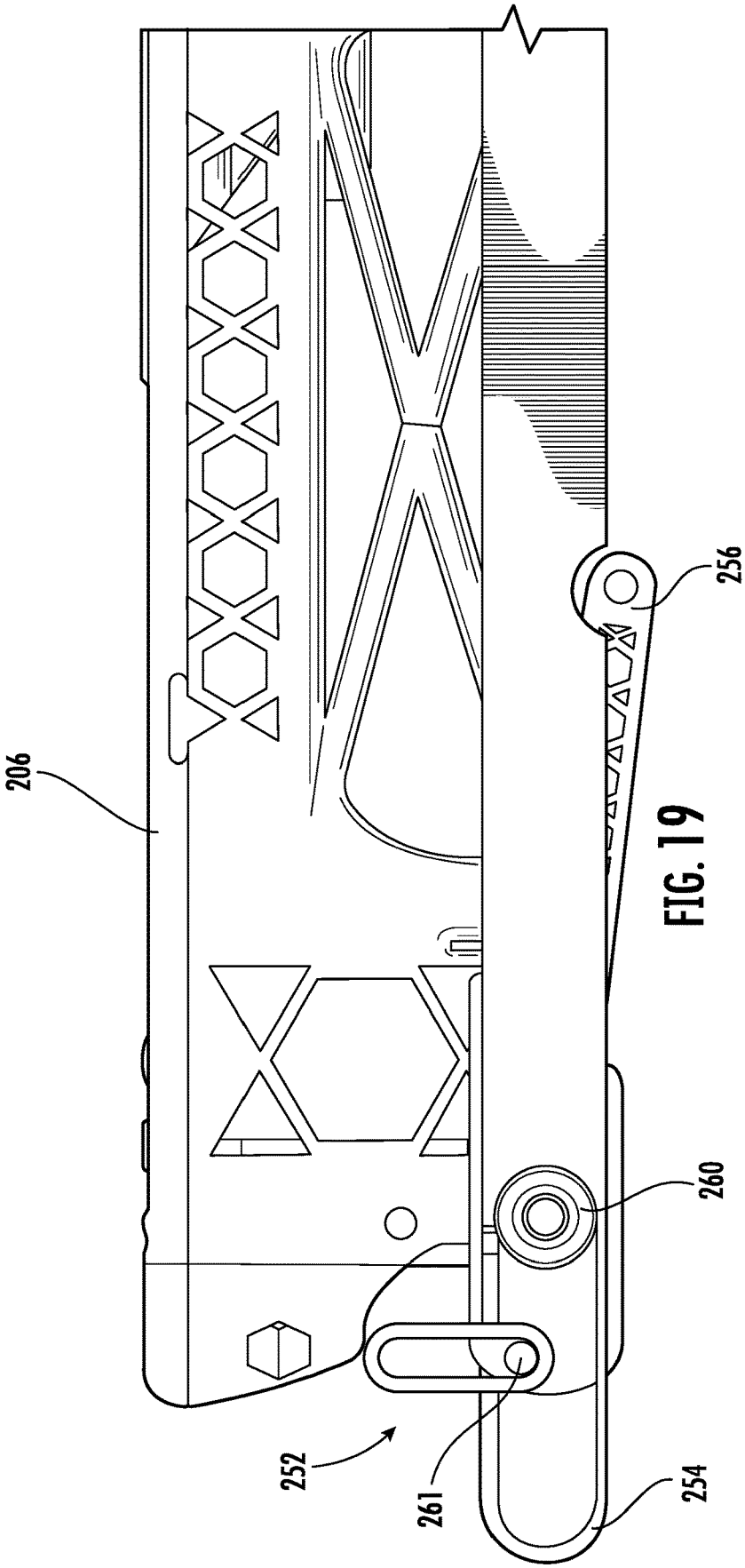

FIG. 19

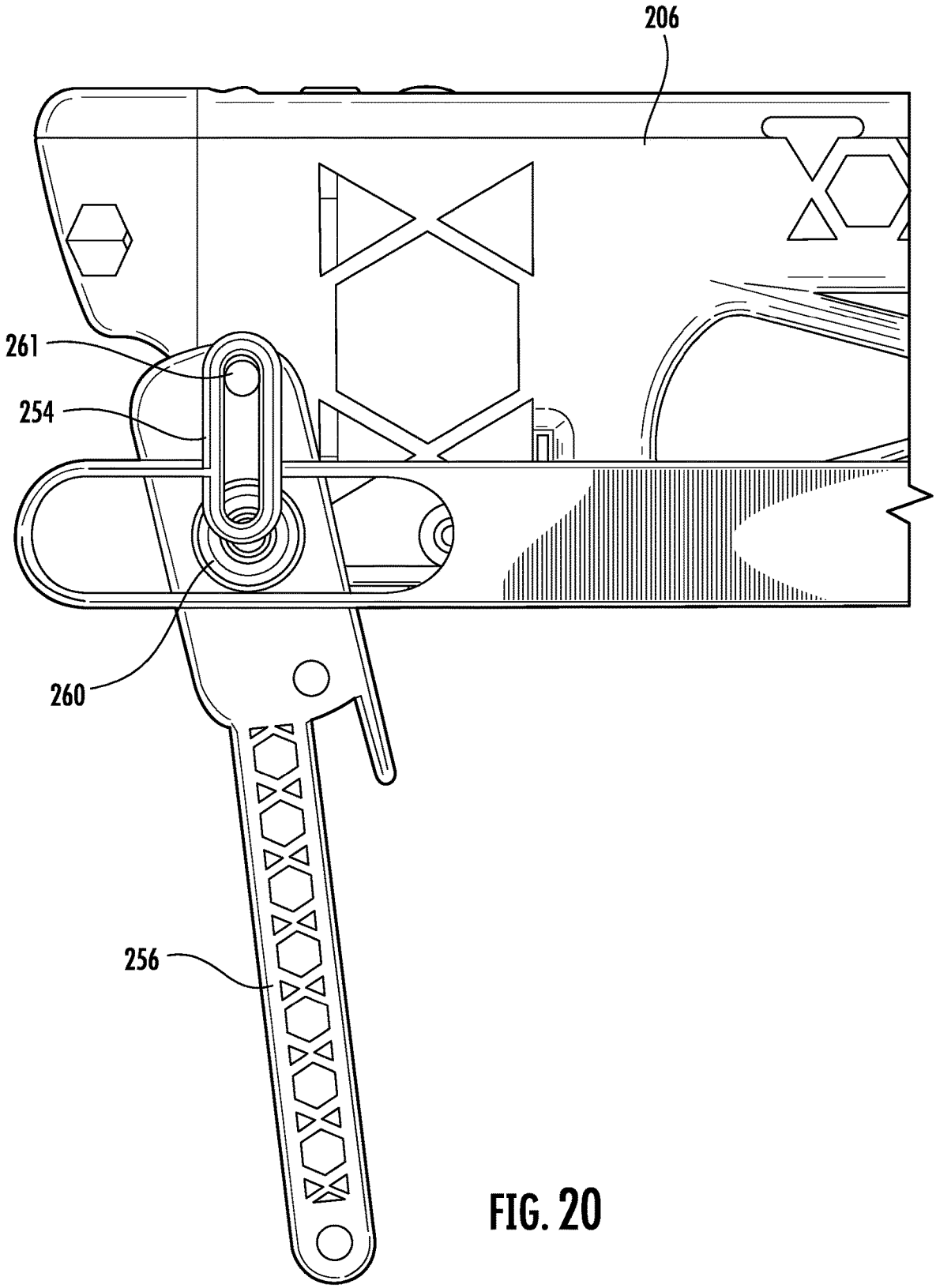

FIG. 20

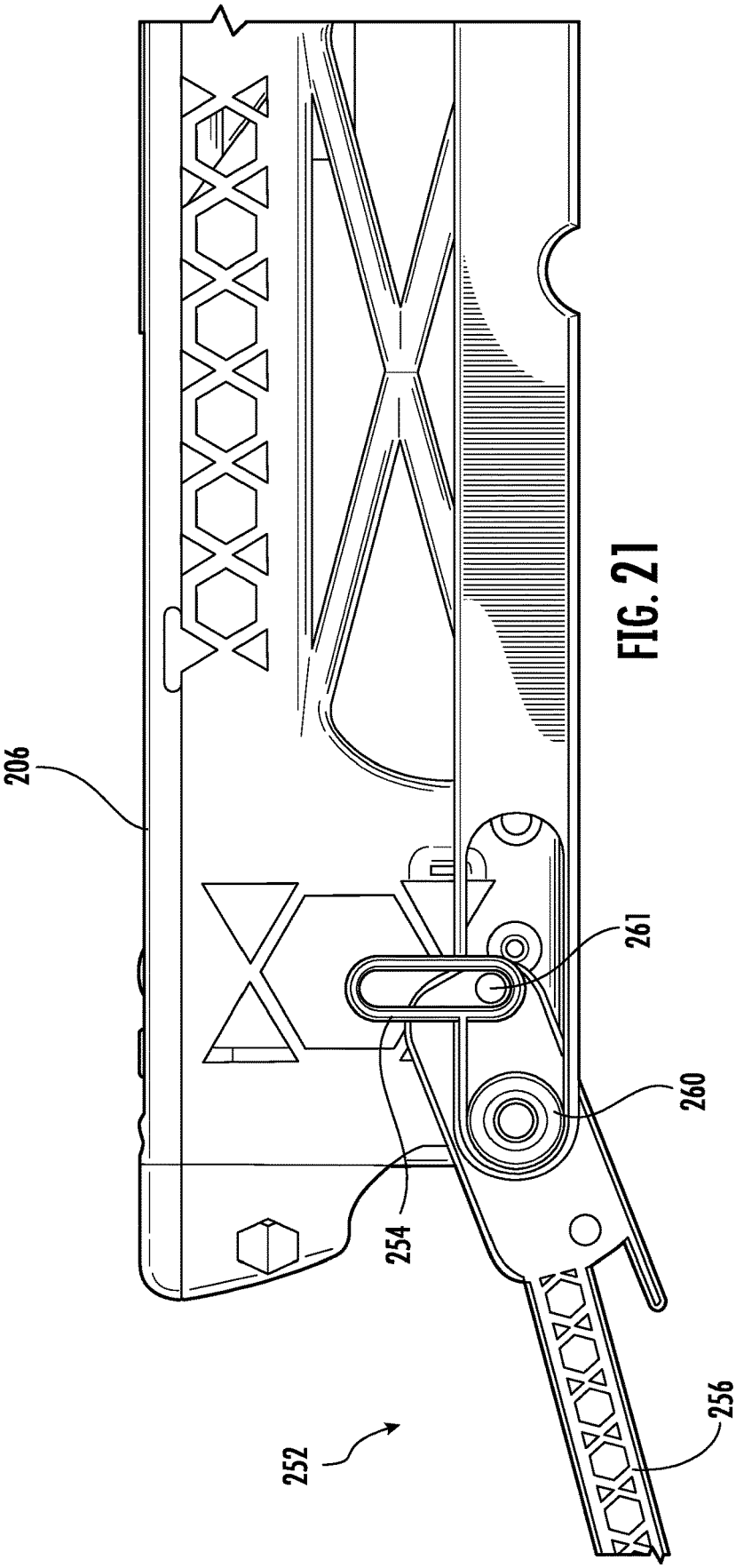

FIG. 21

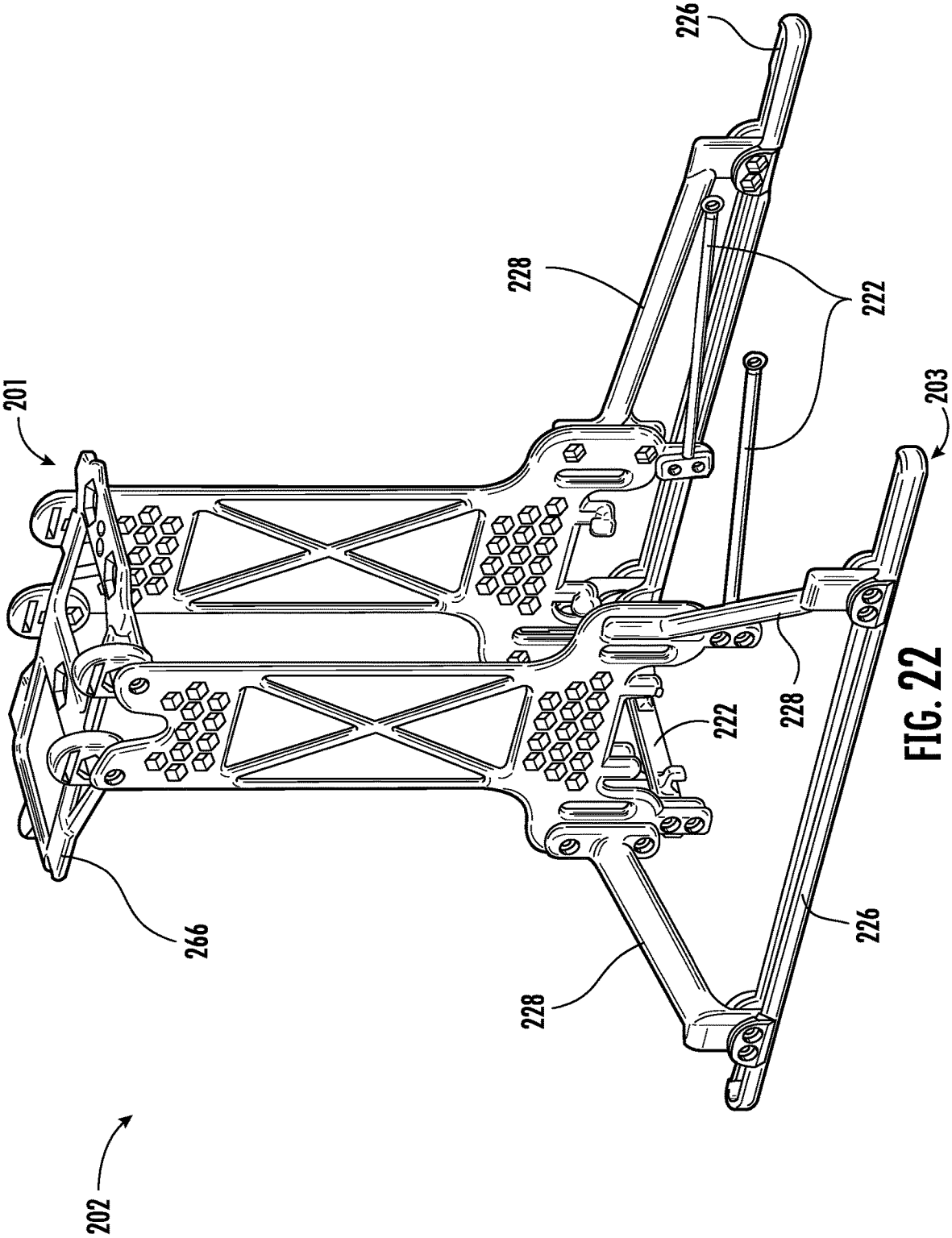

FIG. 22

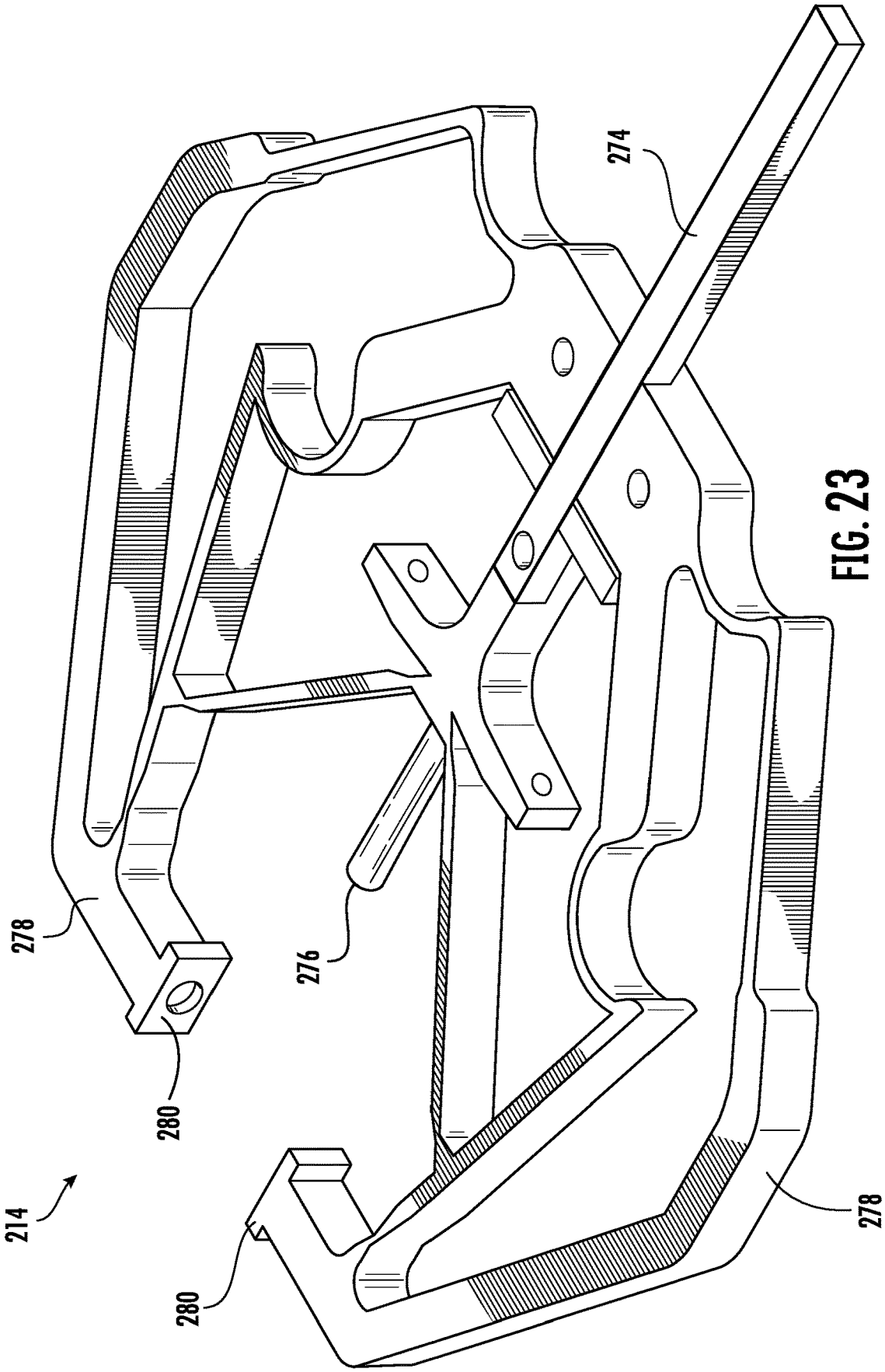

FIG. 23

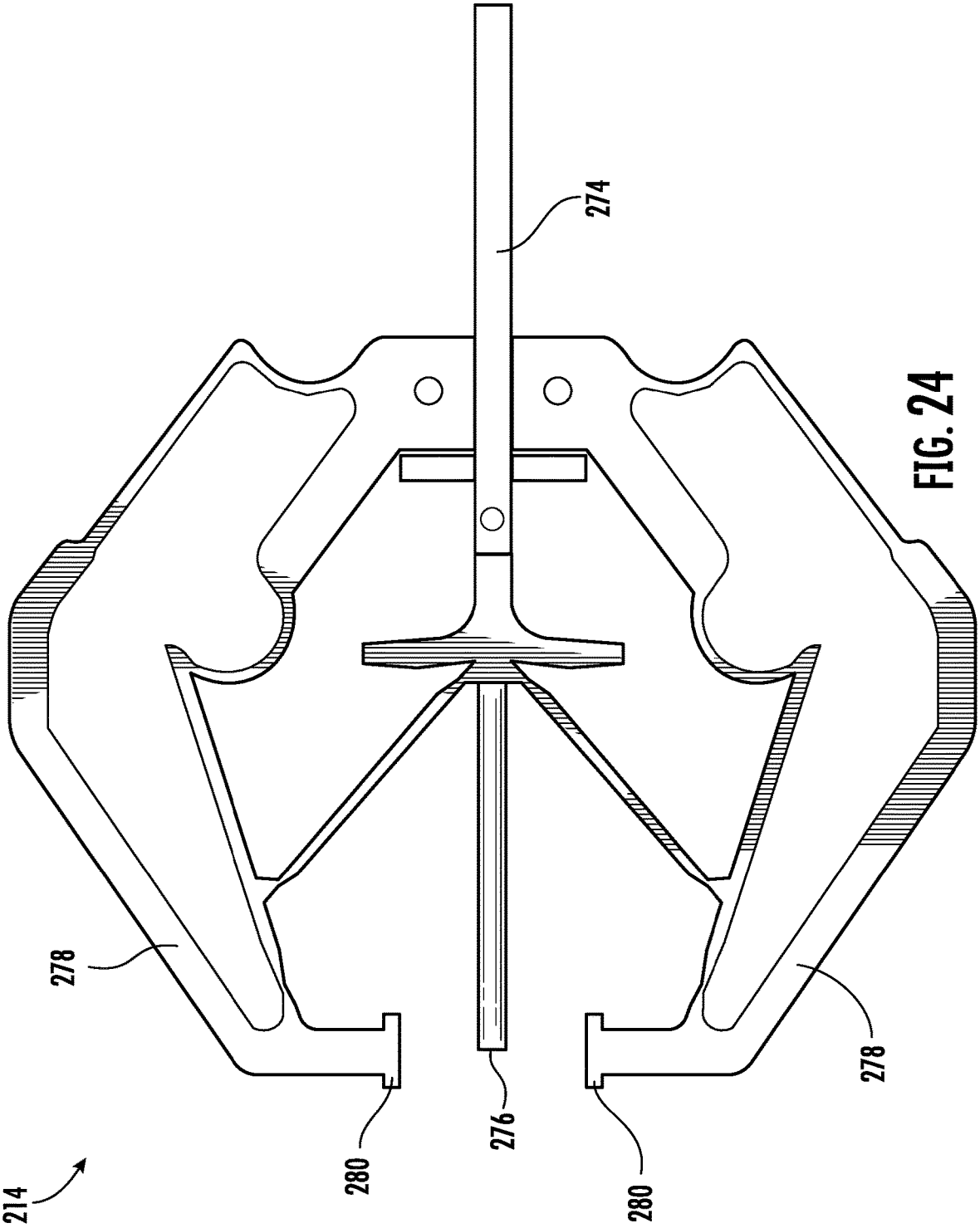

FIG. 24

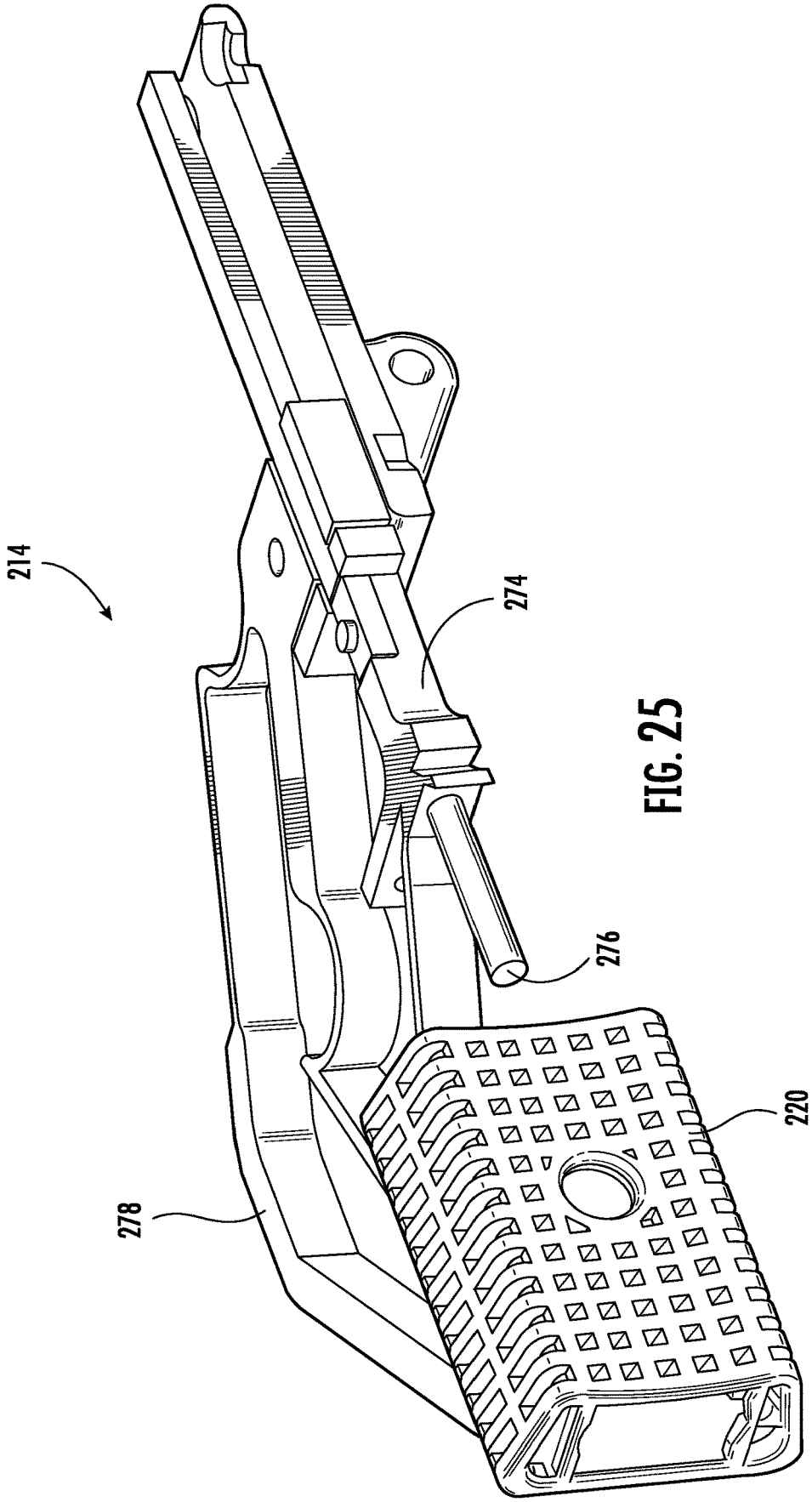

FIG. 25

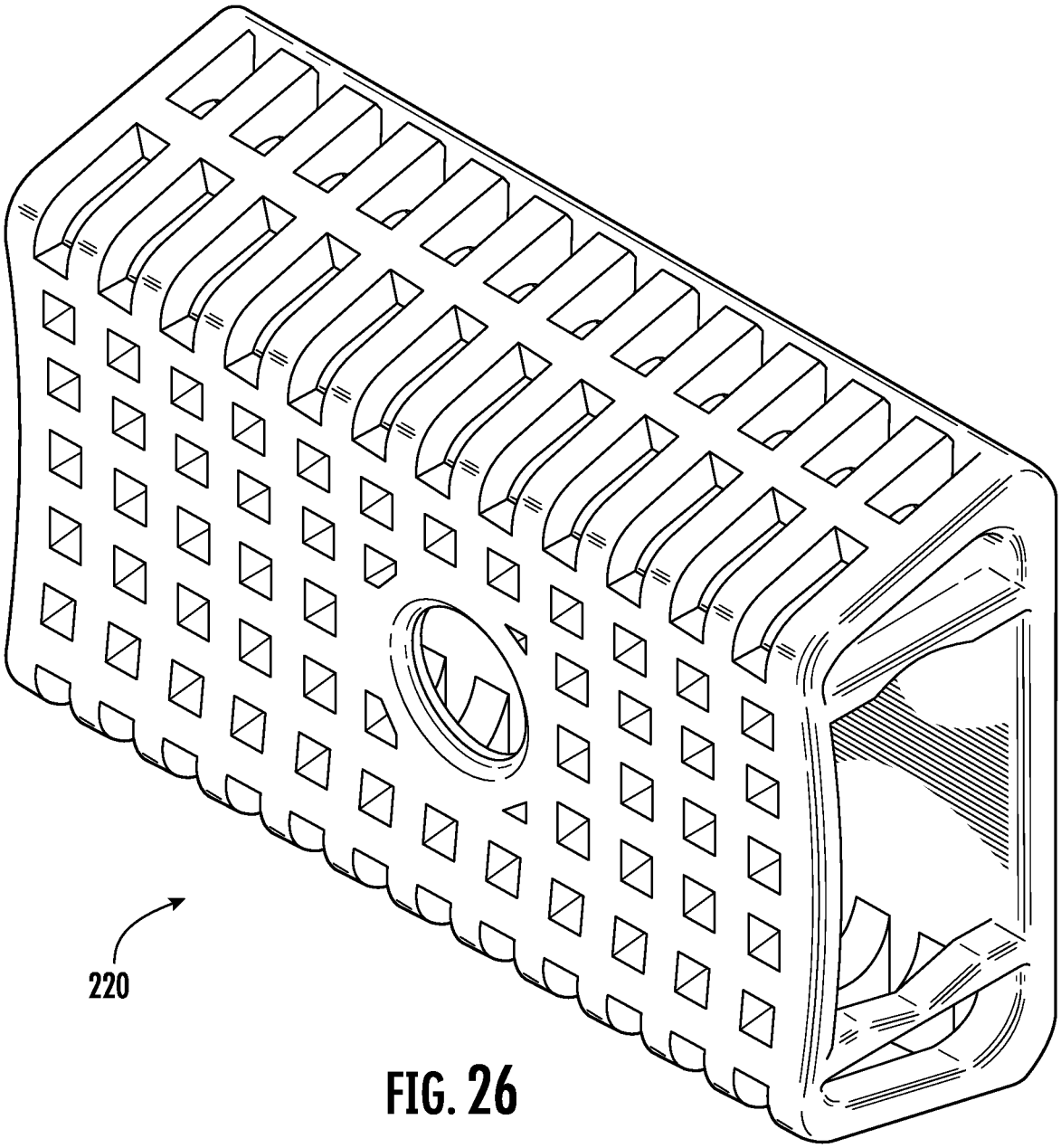

FIG. 26

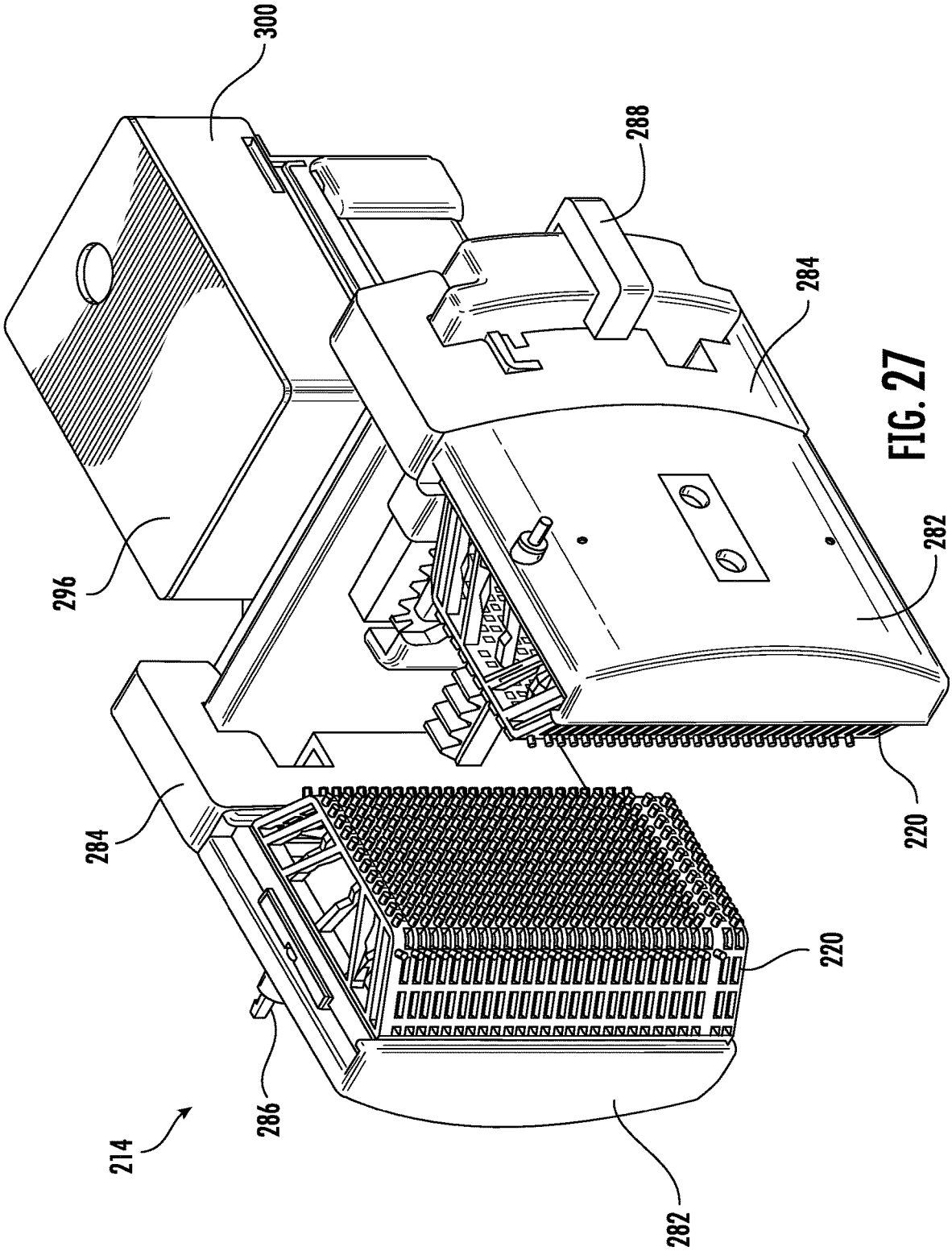

FIG. 27

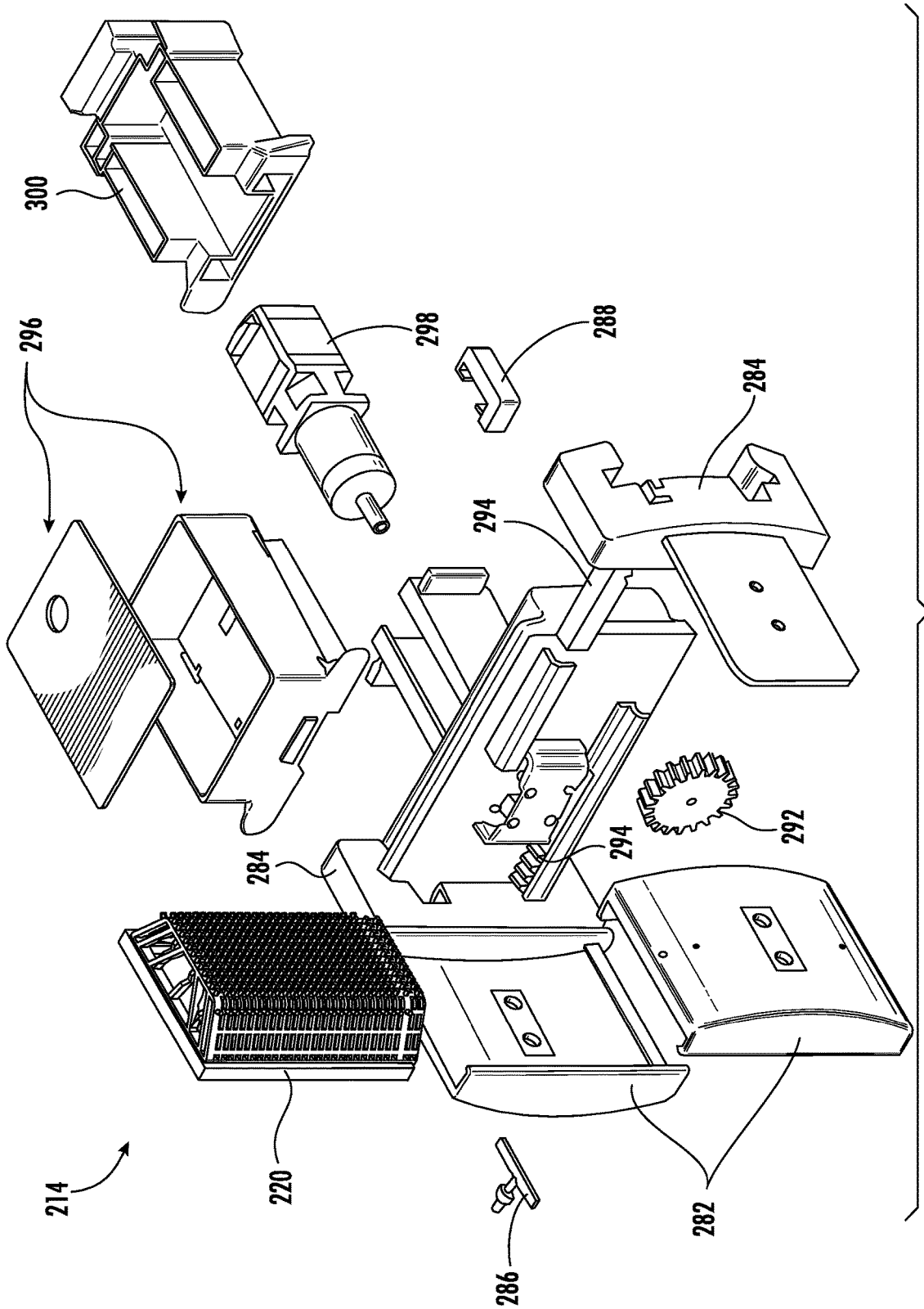

FIG. 28

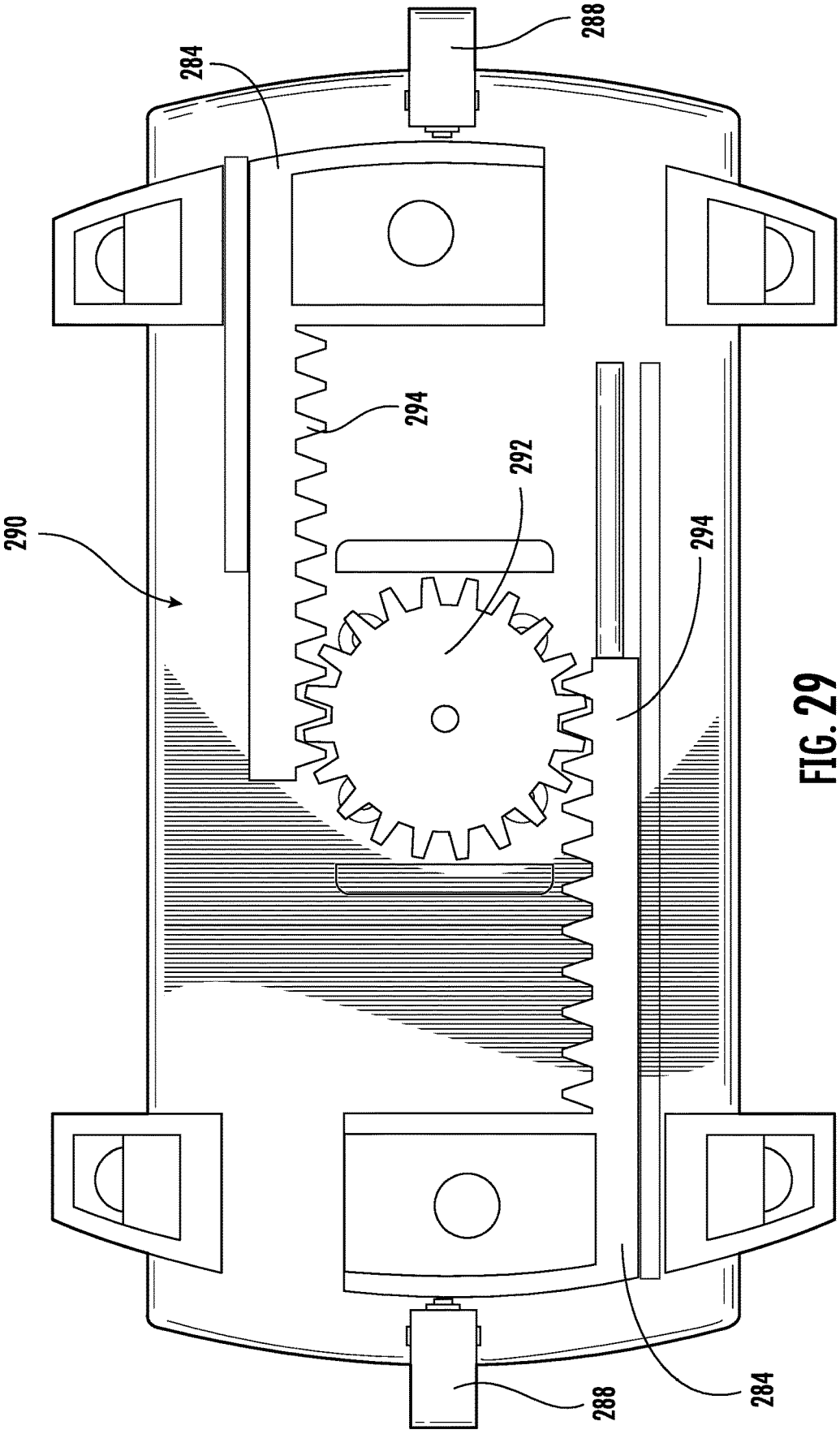

FIG. 29

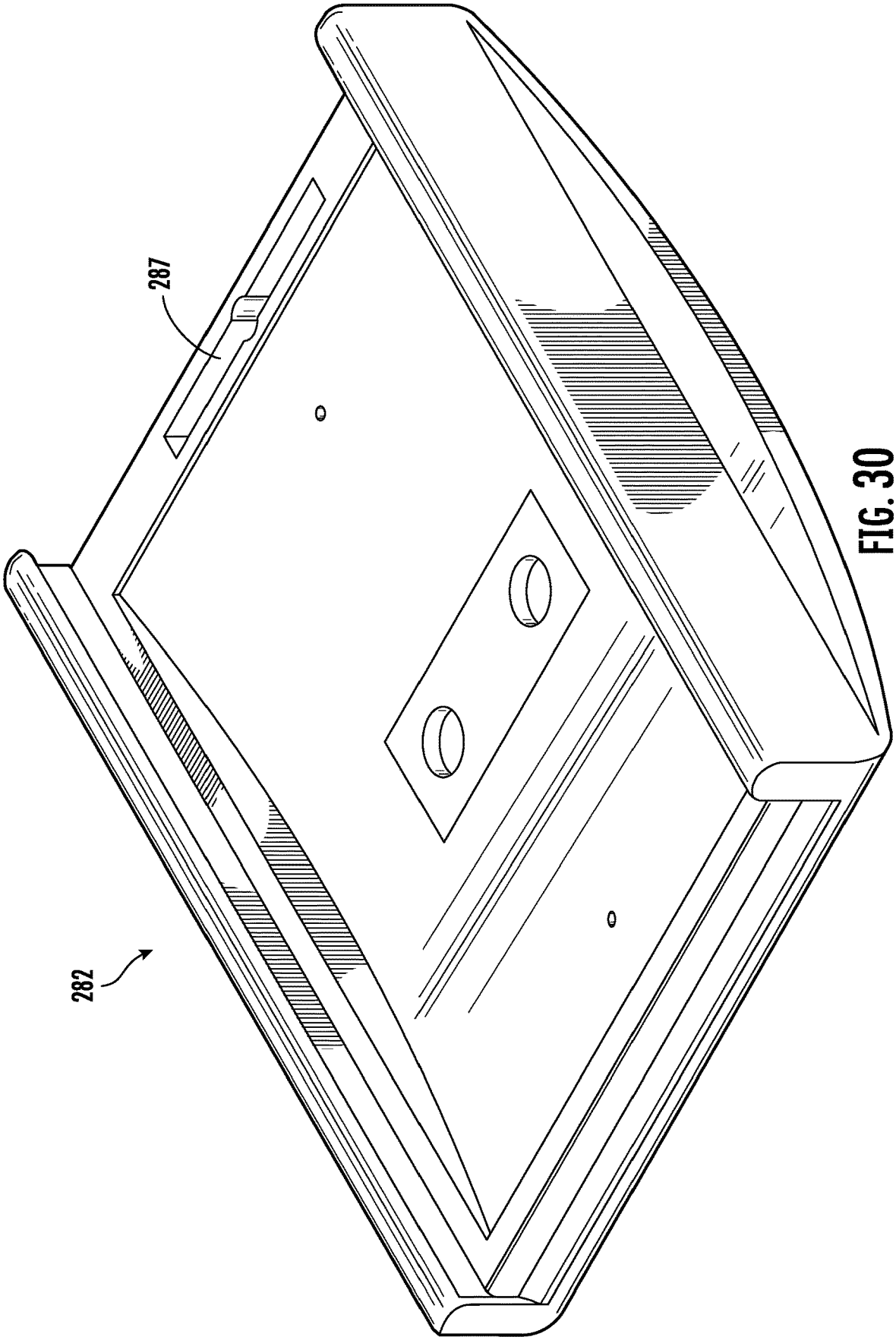

FIG. 30

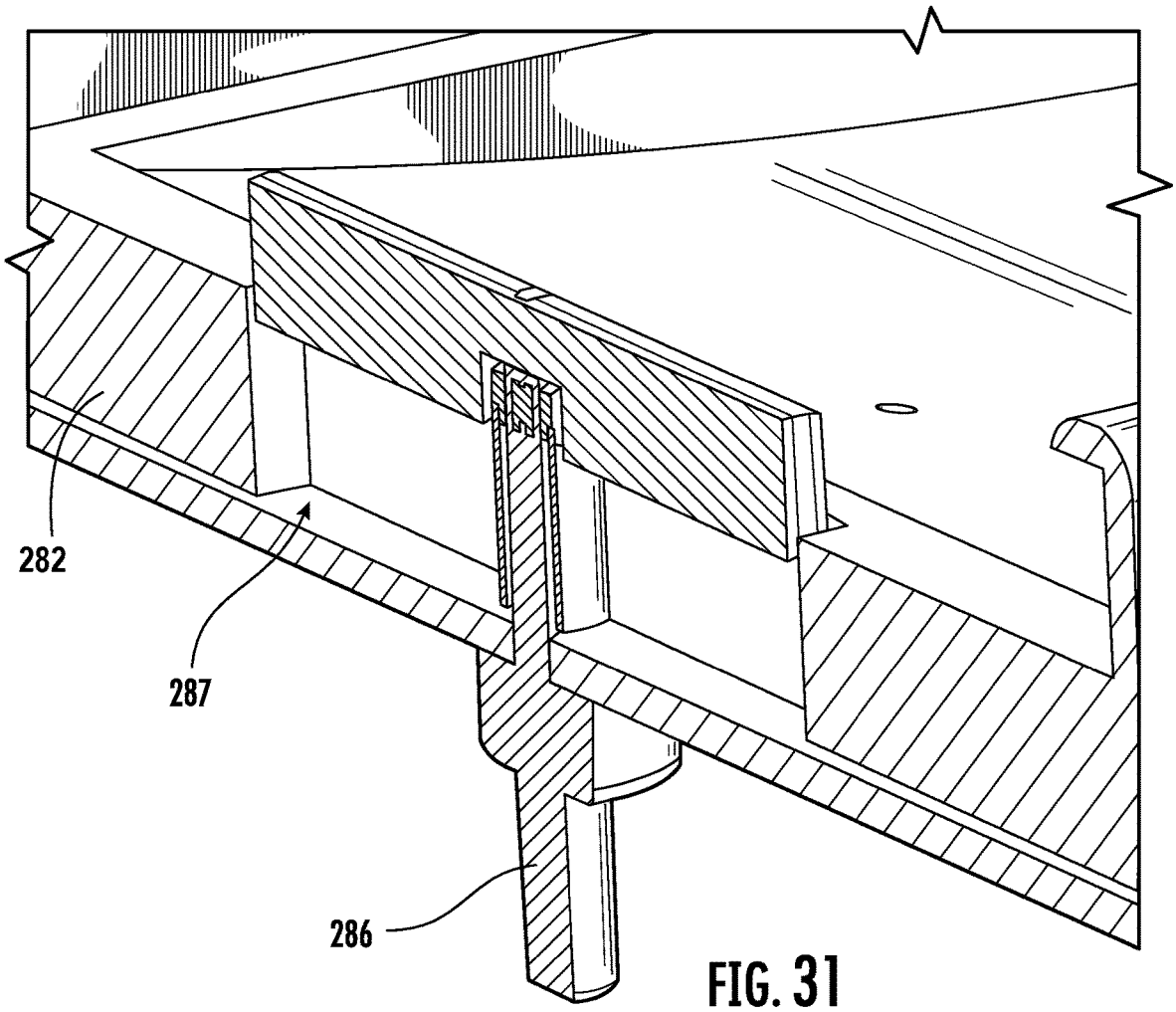

FIG. 31

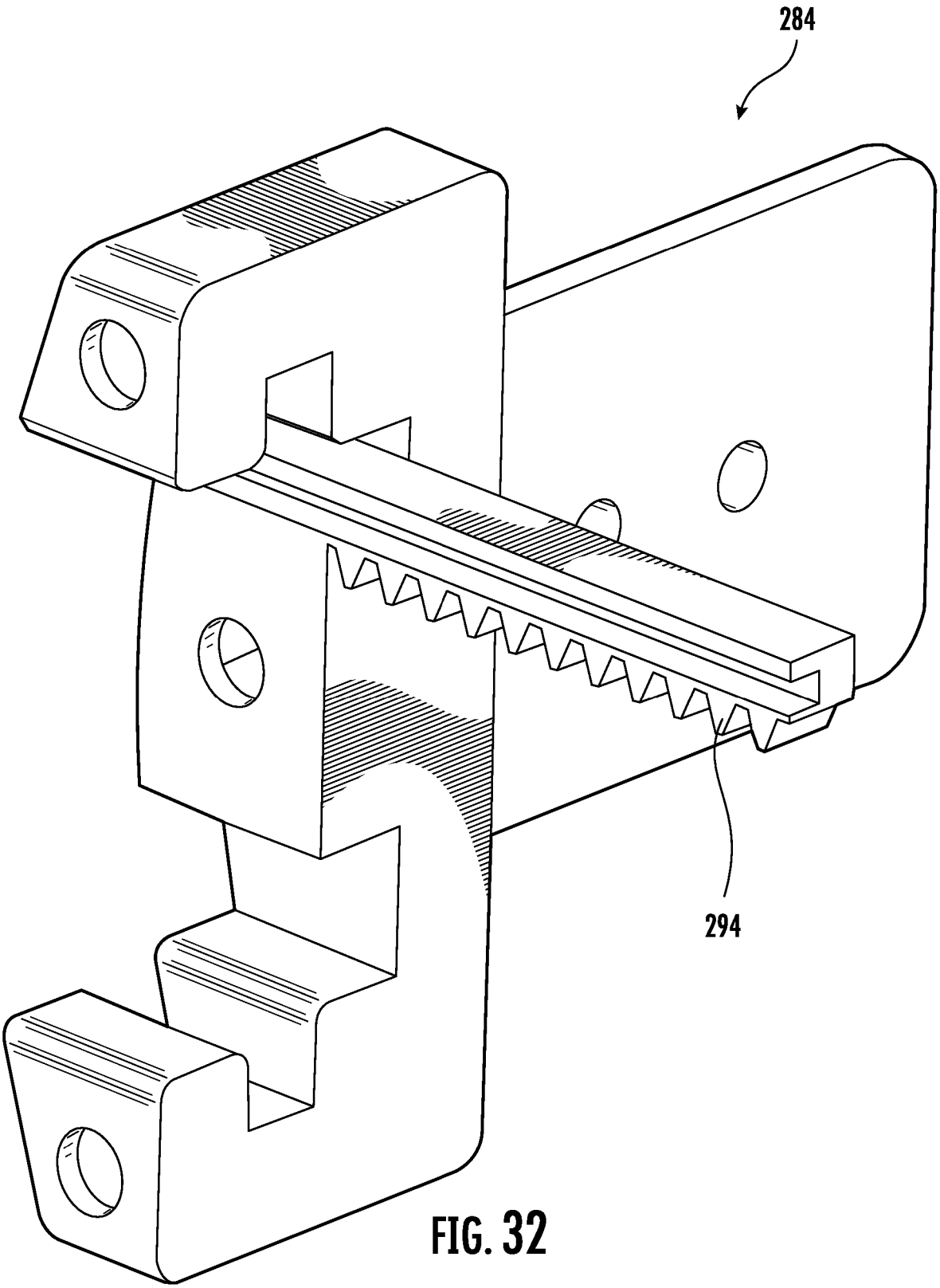

FIG. 32

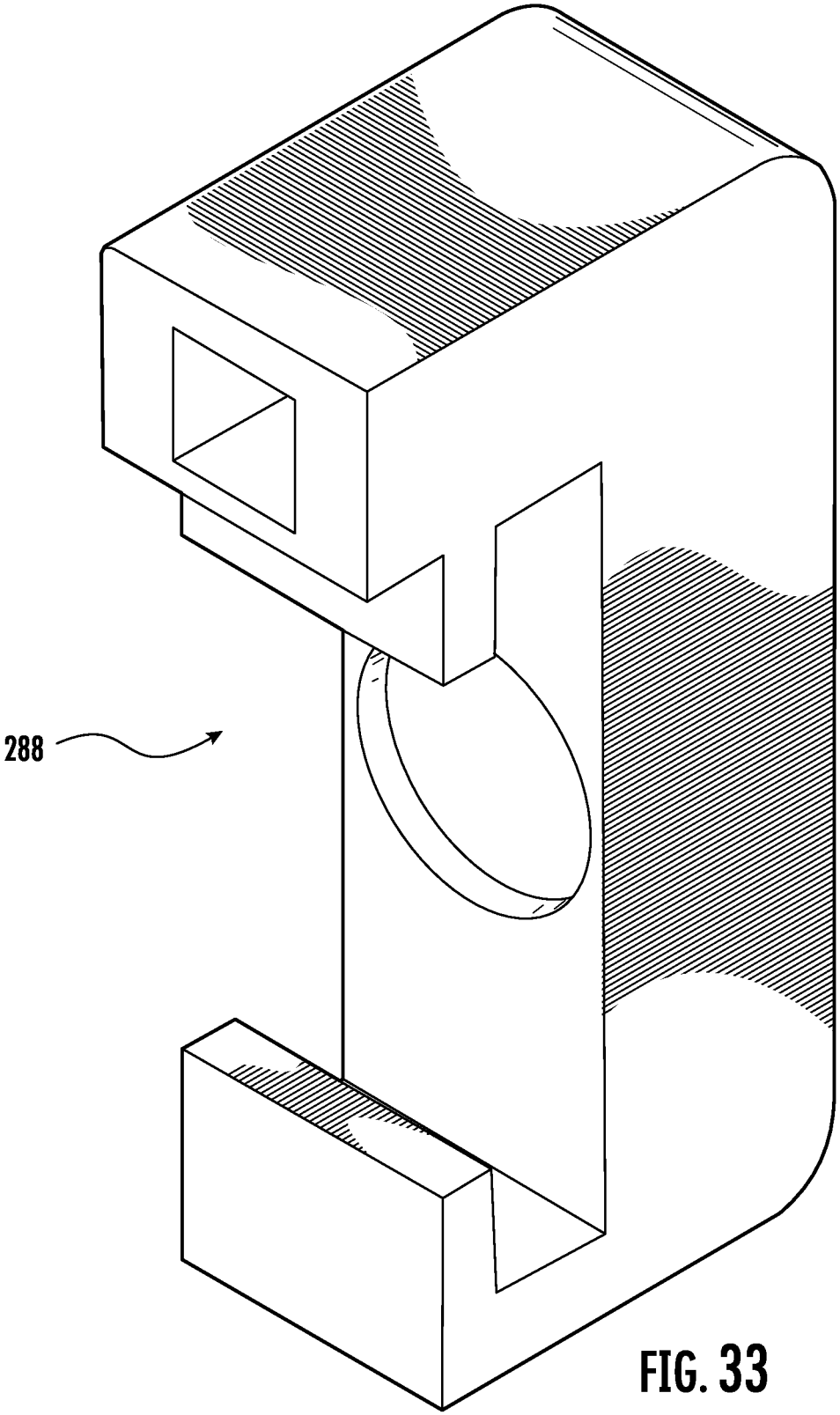

FIG. 33

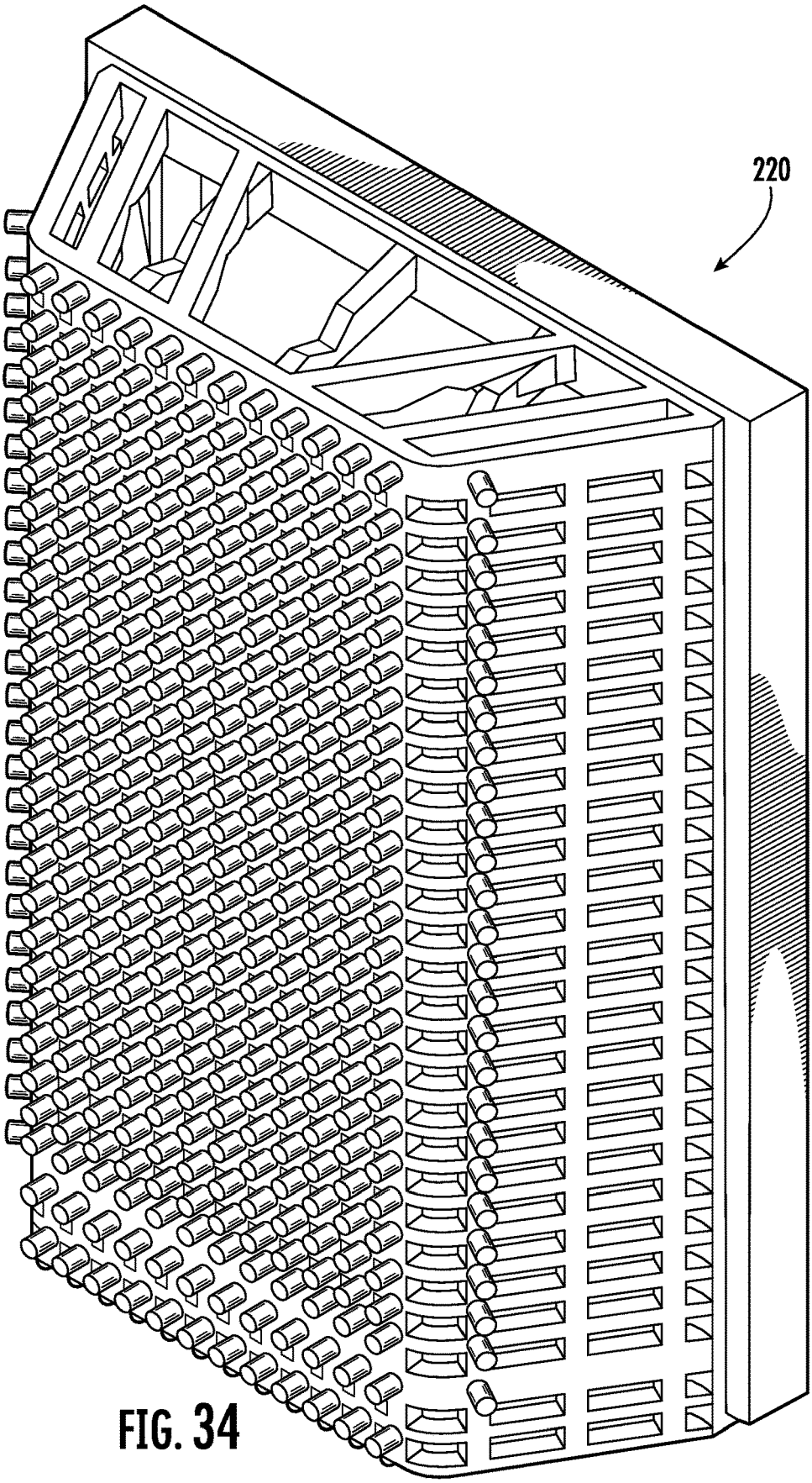

FIG. 34

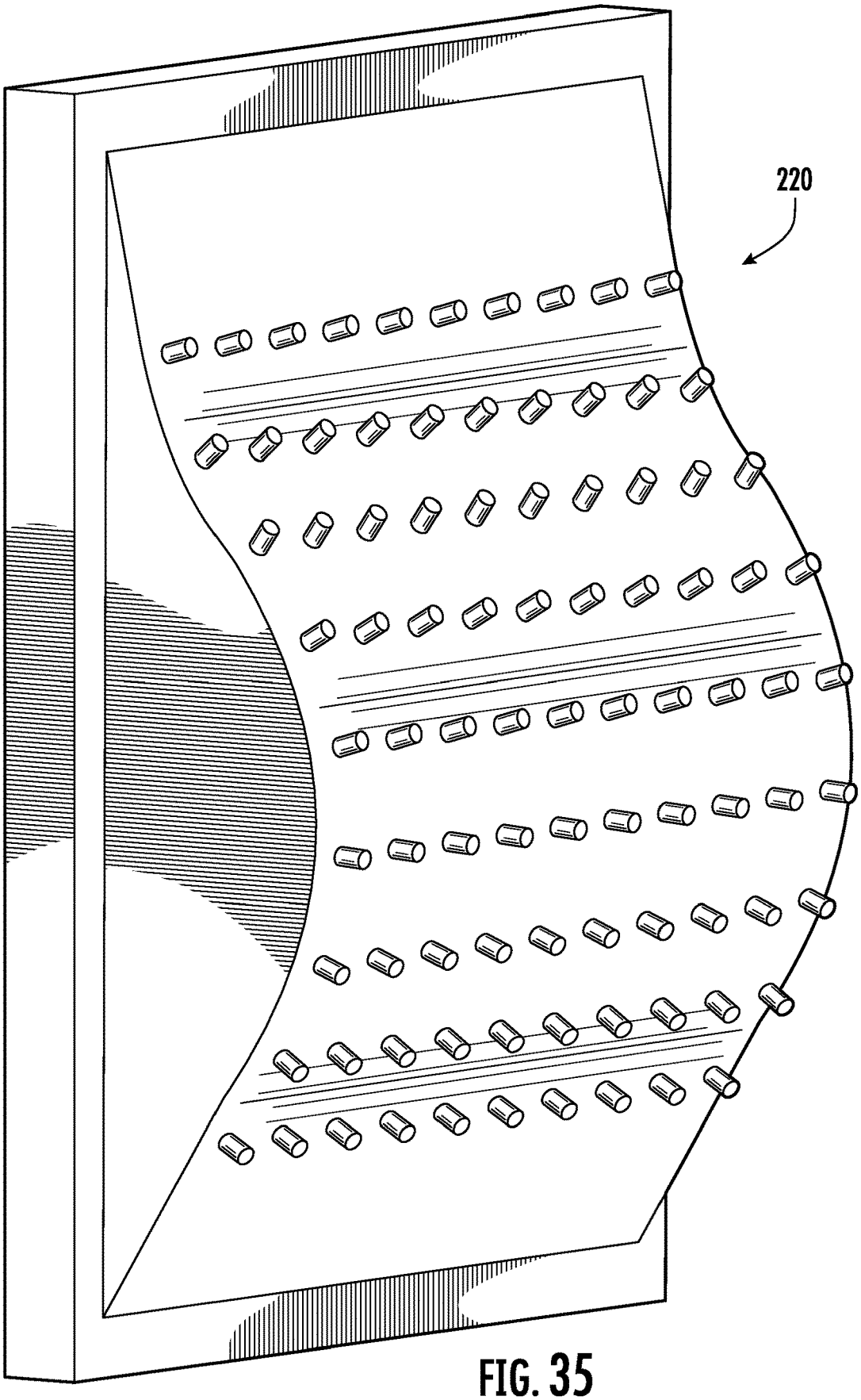

FIG. 35

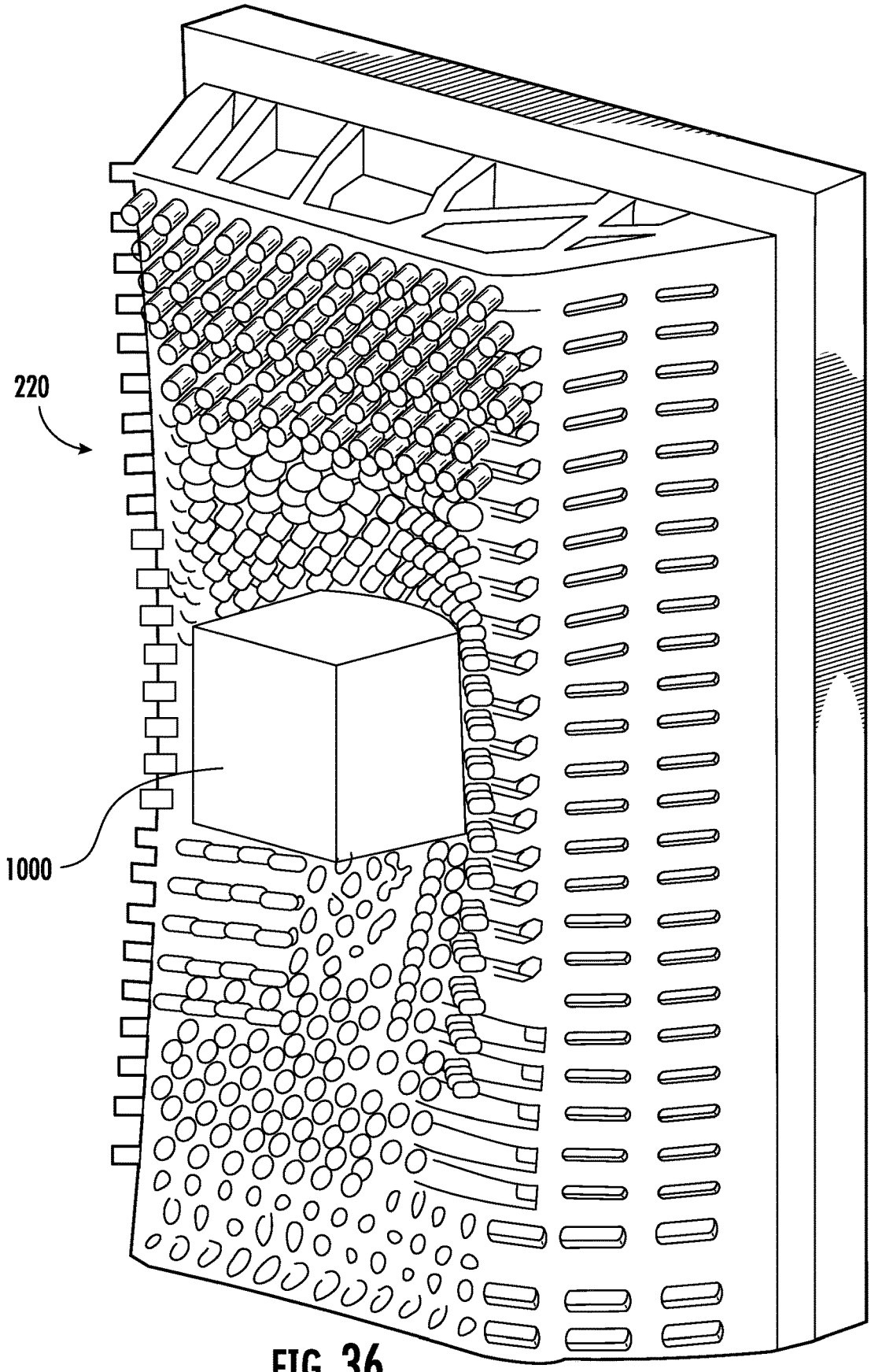

FIG. 36

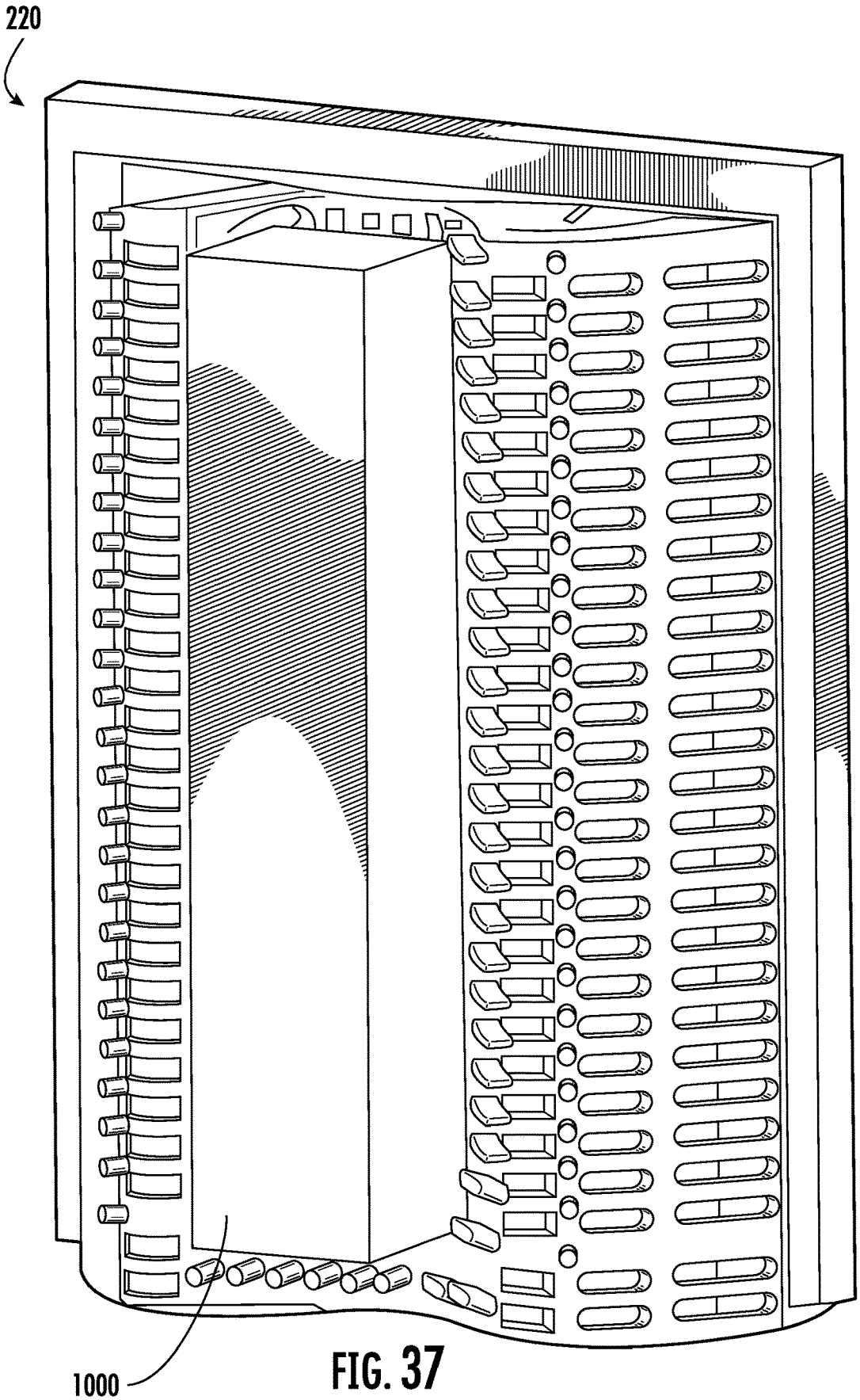

FIG. 37

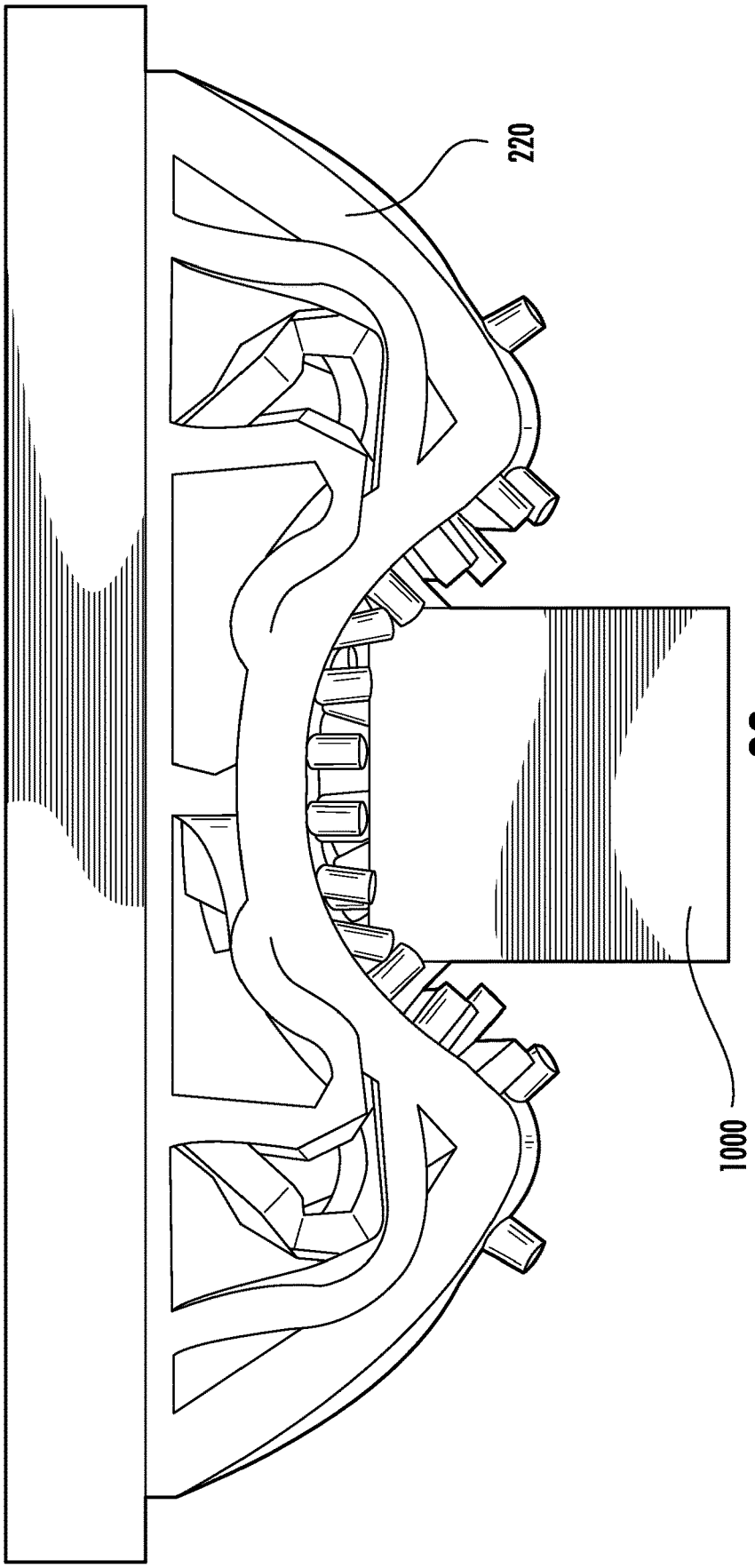

FIG. 38

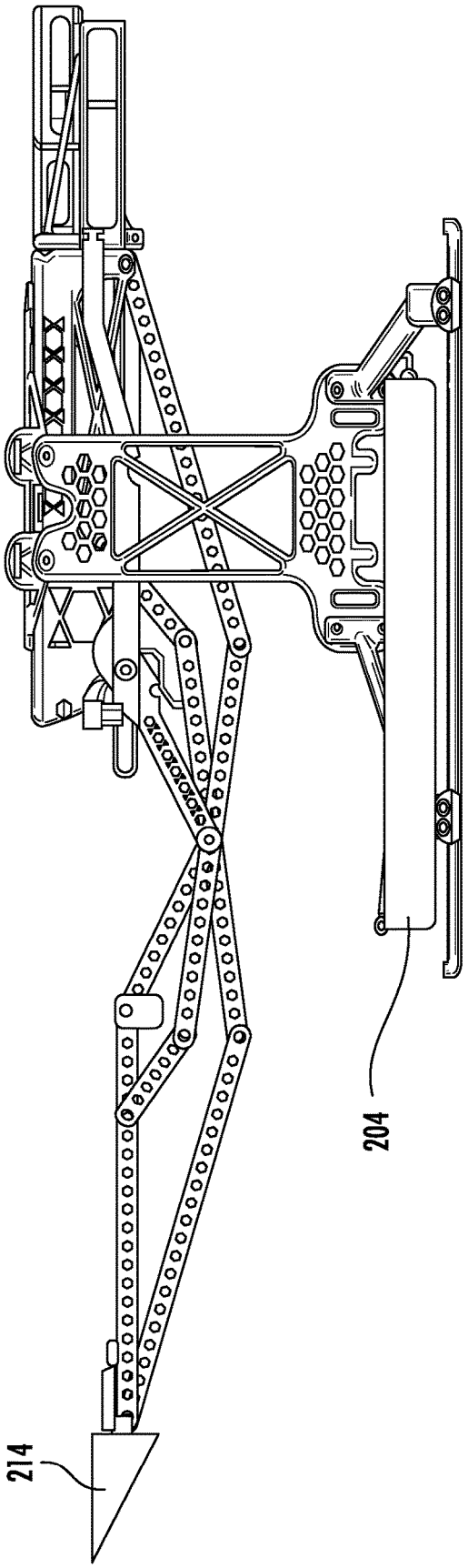

FIG. 39

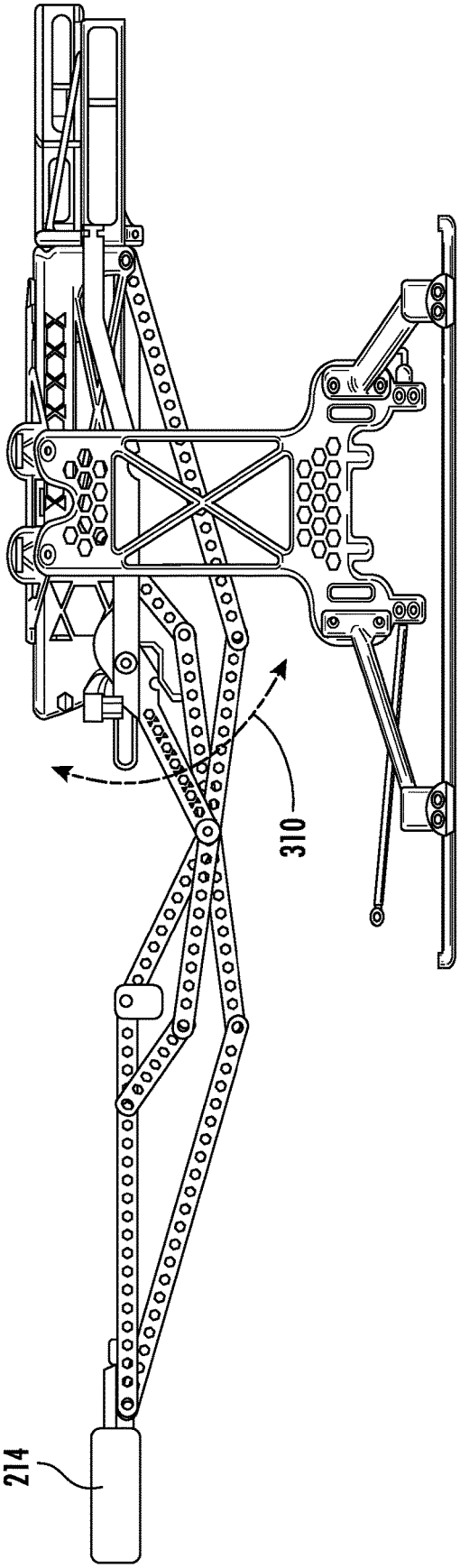

FIG. 40

DRONE MECHANISM INCLUDING FOLDABLE ARM AND COMPRESSIBLE GRIPPER

CROSS-REFERENCE TO RELATED APPLICATIONS

[0001] This application claims benefit of the filing dates of U.S. Provisional Patent Application Ser. No. 63/514,467, having a filing date of Jul. 19, 2023, and U.S. Provisional Patent Application Ser. No. 63/644,579, having a filing date of May 9, 2024, each of which is incorporated herein by reference for all purposes.

FIELD

[0002] The present subject matter relates generally to unmanned aerial vehicles, and more particularly to unmanned aerial vehicles and mechanisms therefor which include an arm and/or end effector.

BACKGROUND

[0003] Unmanned aerial vehicles ("UAV"), sometimes also referred to as drones, are used for a variety of tasks. A quadcopter is an example of a UAV. UAVs, such as quadcopters, may be used to perform tasks that are too difficult or too dangerous for humans or ground vehicles to accomplish, such as in harsh environments, locations where terrain is rough and speed is important, or locations high above the ground. For example, UAV's may be used to collect samples, repair power lines, or harvest produce from tall trees.

[0004] Providing a UAV with a robotic arm and an end effector, such as a gripper, thereon may enhance the UAV's capabilities for such tasks. Such robotic arms and end effectors may, however, undesirably increase the weight, drag, or power consumption of the UAV.

[0005] Accordingly, an improved UAV and mechanisms (e.g., including a robotic arm and/or end effector) therefor with features such as light weight, improved aerodynamics, e.g., when the robotic arm is not deployed, and minimal power consumption, e.g., during actuation, would be useful.

BRIEF DESCRIPTION

[0006] Aspects and advantages of the invention will be set forth in part in the following description, or may be apparent from the description, or may be learned through practice of the invention.

[0007] In a first exemplary embodiment, a mechanism for an unmanned aerial vehicle is provided. The unmanned aerial vehicle includes a body having an upper side and a lower side opposite the upper side. The unmanned aerial vehicle also includes at least one rotor coupled to the body. The rotor is configured to generate lift in an upward direction. The mechanism is configured to be mounted to the lower side of the body. The mechanism includes a landing gear. The landing gear extends between a pair of skids at a bottom end of the mechanism and a connector at the top end of the mechanism. The connector is configured to couple to the lower side of the body of the unmanned aerial vehicle. The mechanism also includes a storage system coupled to the landing gear proximate the pair of skids. The mechanism further includes a robotic arm housing mounted to the landing gear at a bottom side of the connector. The mechanism also includes a counterweight housing adjacent to the robotic arm housing and a robotic arm movably mounted to the robotic arm housing. The robotic arm is movable between a retracted position wherein the robotic arm is folded within the robotic arm housing and an extended position wherein the robotic arm is unfolded and a distal end of the robotic arm is spaced apart from the robotic arm housing in front of the robotic arm housing. The mechanism further includes an actuator coupled to the robotic arm to move the robotic arm between the retracted position and the extended position and an end effector coupled to the distal end of the robotic arm. The end effector includes a gripper with a pair of opposing compressible elements for gripping an object between the pair of compressible elements.

[0008] In a second exemplary embodiment, a mechanism for an unmanned aerial vehicle is provided. The unmanned aerial vehicle includes a body having an upper side and a lower side opposite the upper side. The unmanned aerial vehicle also includes at least one rotor coupled to the body. The rotor is configured to generate lift in an upward direction. The mechanism is configured to be mounted to the lower side of the body. The mechanism includes a landing gear, a storage system, a robotic arm housing, a counterweight housing, a robotic arm, an actuator, and an end effector. The robotic arm is movably mounted to the robotic arm housing. The robotic arm is movable between a retracted position wherein the robotic arm is folded within the robotic arm housing and an extended position wherein the robotic arm is unfolded and a distal end of the robotic arm is spaced apart from the robotic arm housing in front of the robotic arm housing. The actuator is coupled to the robotic arm to move the robotic arm between the retracted position and the extended position. The end effector is coupled to the distal end of the robotic arm. The end effector includes a gripper with a pair of opposing compressible elements for gripping an object between the pair of compressible elements.

[0009] These and other features, aspects and advantages of the present invention will become better understood with reference to the following description and appended claims. The accompanying drawings, which are incorporated in and constitute a part of this specification, illustrate embodiments of the invention and, together with the description, serve to explain the principles of the invention.

BRIEF DESCRIPTION OF THE DRAWINGS

[0010] A full and enabling disclosure of the present invention, including the best mode thereof, directed to one of ordinary skill in the art, is set forth in the specification, which makes reference to the appended figures.

[0011] FIG. **1** provides a perspective view of an unmanned aerial vehicle ("UAV") mounted with a mechanism according to one or more embodiments of the present subject matter.

[0012] FIG. **2** provides another perspective view of the UAV and mechanism of FIG. **1**.

[0013] FIG. **3** provides an enlarged view of a portion of the mechanism of FIG. **1** including a distal end of robotic arm and an end effector thereon.

[0014] FIG. **4** provides a side view of the mechanism of FIG. **1** with the robotic arm in a retracted position.

[0015] FIG. **5** provides a perspective view of the mechanism of FIG. **1** with the robotic arm in a retracted position.

[0016] FIG. **6** provides another side view of the mechanism of FIG. **1** with the robotic arm in a retracted position.

[0017] FIG. **7** provides a side view of the mechanism of FIG. **1** with the robotic arm in an intermediate position.

[0018] FIG. **8** provides a perspective view of a portion of a mechanism for a UAV including a counterweight housing, a robotic arm housing, a robotic arm in an intermediate position, and an end effector on a distal end of the robotic arm.

[0019] FIG. **9** provides a perspective view of the mechanism of FIG. **1** with the robotic arm in an extended position.

[0020] FIG. **10** provides a side view of the mechanism of FIG. **1** with the robotic arm in the extended position.

[0021] FIG. **11** provides a sectioned, exploded view of the mechanism of FIG. **1**.

[0022] FIG. **12** provides a perspective view of the robotic arm housing of the mechanism of FIG. **11**.

[0023] FIG. **13** provides another perspective view of the robotic arm housing of the mechanism of FIG. **11**.

[0024] FIG. **14** provides a perspective view of a counterweight housing of the mechanism of FIG. **11**.

[0025] FIG. **15** provides a perspective view of a back cover for the counterweight housing of FIG. **14**.

[0026] FIG. **16** provides a perspective view of an exemplary robotic arm which may be incorporated into a mechanism according to one or more embodiments of the present disclosure, such as the mechanism of FIG. **1**, with the arm in a retracted position.

[0027] FIG. **17** provides a perspective view of the exemplary robotic arm of FIG. **16** in an extended position.

[0028] FIG. **18** provides a perspective view of the robotic arm housing of FIG. **12** with an actuation mechanism mounted thereto.

[0029] FIG. **19** provides a side view of a portion of the robotic arm housing and actuation mechanism of FIG. **18** in a retracted position.

[0030] FIG. **20** provides a side view of a portion of the robotic arm housing and actuation mechanism of FIG. **18** in an intermediate position.

[0031] FIG. **21** provides a side view of a portion of the robotic arm housing and actuation mechanism of FIG. **18** in an extended position.

[0032] FIG. **22** provides a perspective view of an exemplary landing gear of a mechanism for a UAV, such as the mechanism of FIG. **1**.

[0033] FIG. **23** provides a perspective view of an exemplary end effector for a mechanism according to one or more exemplary embodiments of the present disclosure.

[0034] FIG. **24** provides a top view of the exemplary end effector of FIG. **23**.

[0035] FIG. **25** provides a sectioned perspective view of the exemplary end effector of FIG. **23** with a compressible element coupled thereto. FIG. **26** provides a perspective view of the compressible element of FIG. **25**.

[0036] FIG. **27** provides a perspective view of an exemplary end effector for a mechanism according to one or more additional exemplary embodiments of the present disclosure.

[0037] FIG. **28** provides an exploded view of the exemplary end effector of FIG. **27**.

[0038] FIG. **29** provides an end view of a portion of the exemplary end effector of FIG. **27**.

[0039] FIG. **30** provides a perspective view of a shell of the exemplary end effector of FIG. **27**.

[0040] FIG. **31** provides a sectioned perspective view of the shell of FIG. **30** and a lock according to one or more exemplary embodiments of the present disclosure.

[0041] FIG. **32** provides a perspective view of a handle of the exemplary end effector of FIG. **27**.

[0042] FIG. **33** provides a perspective view of a stop of the exemplary end effector of FIG. **27**.

[0043] FIG. **34** provides a perspective view of an exemplary compressible element for an end effector according to one or more exemplary embodiments of the present disclosure.

[0044] FIG. **35** provides a perspective view of another exemplary compressible element for an end effector according to one or more additional exemplary embodiments of the present disclosure.

[0045] FIG. **36** provides a perspective view of the compressible element of FIG. **34** in a first compressed state, e.g., when engaging a first object.

[0046] FIG. **37** provides a perspective view of the compressible element of FIG. **34** in a second compressed state, e.g., when engaging a second object.

[0047] FIG. **38** provides a top view of the compressible element of FIG. **34** in the second compressed state, e.g., when engaging the second object.

[0048] FIG. **39** provides a side view of a mechanism for a UAV according to one or more embodiments of the present disclosure, where the mechanism includes an exemplary liquid container and spraying end effector.

[0049] FIG. **40** provides a side view of a mechanism for a UAV according to one or more additional embodiments of the present disclosure.

DETAILED DESCRIPTION

[0050] Reference now will be made in detail to embodiments of the invention, one or more examples of which are illustrated in the drawings. Each example is provided by way of explanation of the invention, not limitation of the invention. In fact, it will be apparent to those skilled in the art that various modifications and variations can be made in the present invention without departing from the scope or spirit of the invention. For instance, features illustrated or described as part of one embodiment can be used with another embodiment to yield a still further embodiment. Thus, it is intended that the present invention covers such modifications and variations as come within the scope of the appended claims and their equivalents.

[0051] As used herein, terms of approximation such as "generally," "about," or "approximately" include values within ten percent greater or less than the stated value. When used in the context of an angle or direction, such terms include within ten degrees greater or less than the stated angle or direction, e.g., "generally vertical" includes forming an angle of up to ten degrees either clockwise or counterclockwise with the vertical direction V.

[0052] The detailed description uses numerical and letter designations to refer to features in the drawings. Like or similar designations in the drawings and description have been used to refer to like or similar parts of the invention. As used herein, the terms "first," "second," and "third" may be used interchangeably to distinguish one component from another and are not intended to signify location or importance of the individual components.

[0053] The terms "includes" and "including" are intended to be inclusive in a manner similar to the term "comprising."

Similarly, the term "or" is generally intended to be inclusive (i.e., "A or B" is intended to mean "A or B or both"). In addition, here and throughout the specification and claims, range limitations may be combined and/or interchanged. Such ranges are identified and include all the sub-ranges contained therein unless context or language indicates otherwise. For example, all ranges disclosed herein are inclusive of the endpoints, and the endpoints are independently combinable with each other. The singular forms "a," "an," and "the" include plural references unless the context clearly dictates otherwise.

[0054] The word "exemplary" is used herein to mean "serving as an example, instance, or illustration." In addition, references to "an embodiment" or "one embodiment" does not necessarily refer to the same embodiment, although it may. Any implementation described herein as "exemplary" or "an embodiment" is not necessarily to be construed as preferred or advantageous over other implementations. Moreover, each example is provided by way of explanation of the invention, not limitation of the invention. In fact, it will be apparent to those skilled in the art that various modifications and variations can be made in the present invention without departing from the scope of the invention. For instance, features illustrated or described as part of one embodiment can be used with another embodiment to yield a still further embodiment. Thus, it is intended that the present invention covers such modifications and variations as come within the scope of the appended claims and their equivalents.

[0055] As illustrated for example in FIGS. **1** and **2**, embodiments of the present disclosure include unmanned aerial vehicles, such as the exemplary unmanned aerial vehicle **100** illustrated in FIGS. **1** and **2**, and mechanisms therefor, such as the exemplary mechanism **200** illustrated, e.g., in FIGS. **1** and **2**. Unmanned aerial vehicles may also be referred to as "UAVs" or drones. In particular, the exemplary embodiment of the UAV **100** illustrated in FIGS. **1** and **2** is also known as a quadcopter. In additional embodiments, mechanism **200** as described hereinbelow may be used with any suitable UAV **100**, such as a dual rotor UAV, other multirotor UAV (e.g., a tricopter or a multirotor UAV having more than four rotors), single rotor UAV, fixed-wing UAV, or other similar UAVs.

[0056] Unmanned aerial vehicles generally include a main body **102** or chassis and one or more lift-generating and/or propulsion (thrust-generating) mechanisms. A UAV further includes one or more controllers, e.g., integrated circuits, including a wireless communication module and antenna for sending and receiving remote commands, instructions, and other information. A UAV may also include a vision system, e.g., comprising a camera, global positioning system (GPS), gyroscopes, and other components or accessories, such as a manipulator, e.g., a robotic arm such as the exemplary robotic arms described hereinbelow, which are communicatively coupled with the controller and may be operated by the controller, e.g., in response to remote commands received wirelessly by the controller.

[0057] As may be seen in FIGS. **1** and **2**, the UAV **100**, e.g., quadcopter **100**, may include an upper **104** side and a lower side **106** opposite the upper side **104**, such as an upper side **104** of the main body **102** and a lower side **106** of the main body **102**. The terms "upper" and "lower" may be defined with respect to each other, e.g., as facing in opposite directions, and with respect to a vertical direction or orientation, e.g., wherein the UAV **100** is operable and configured to move upward along the vertical direction when the lift-generating mechanism is activated. For example, the illustrated quadcopter **100** includes four rotors **108** which generate lift when rotated. As those of ordinary skill in the art will recognize and understand, each rotor **108** includes a propeller **110** coupled to a motor (not shown), and each motor may be controlled, e.g., selectively activated or deactivated and the speed or direction thereof adjusted, by the controller of the UAV **100**. By varying the speed of rotation, direction of rotation, or angle of each rotor **108** or at least one rotor **108**, the UAV **100** may move horizontally, e.g., in a horizontal direction generally parallel to the ground or generally perpendicular to the vertical direction, due to the varying amount or direction of lift generated by the rotors **108** which are operated at different speeds, rotated in different directions, or at various angles. Such variations across and among the rotors **108** also permit variations in and control of the pitch, yaw, and roll of the UAV **100**.

[0058] The controller may be generally configured to facilitate UAV operation. In this regard, the lift and/or propulsion mechanism and other components, such as the vision system (if provided) or robotic arm (if provided) may be in communication with the controller such that controller may receive control inputs from user input devices, and may otherwise regulate operation of the UAV **100**. For example, signals generated by the controller may activate or operate the UAV **100**, including any or all system components, subsystems, or interconnected devices, in response to user inputs and other control commands wirelessly received by the controller. The various components of the UAV **100** may be in communication with the controller via, for example, one or more signal lines or shared communication busses. In this manner, Input/Output ("I/O") signals may be routed between the controller and various operational components of the UAV **100**.

[0059] As used herein, the terms "processing device," "computing device," "controller," or the like may generally refer to any suitable processing device, such as a general or special purpose microprocessor, a microcontroller, an integrated circuit, an application specific integrated circuit (ASIC), a digital signal processor (DSP), a field-programmable gate array (FPGA), a logic device, one or more central processing units (CPUs), a graphics processing units (GPUs), processing units performing other specialized calculations, semiconductor devices, etc. In addition, these "controllers" are not necessarily restricted to a single element but may include any suitable number, type, and configuration of processing devices integrated in any suitable manner to facilitate operation of the UAV, such as the vision system may include a dedicated and specialized controller separate from or onboard a main controller, similarly, the robotic arm may also or instead be operated by a dedicated controller. Alternatively, controller **166** may be constructed without using a microprocessor, e.g., using a combination of discrete analog and/or digital logic circuitry (such as switches, amplifiers, integrators, comparators, flip-flops, AND/OR gates, and the like) to perform control functionality instead of relying upon software.

[0060] The controller may include, or be associated with, one or more memory elements or non-transitory computer-readable storage mediums, such as RAM, ROM, EEPROM, EPROM, flash memory devices, magnetic disks, or other suitable memory devices (including combinations thereof).

These memory devices may be a separate component from the processor or may be included onboard within the processor. In addition, these memory devices can store information and/or data accessible by the one or more processors, including instructions that can be executed by the one or more processors. It should be appreciated that the instructions can be software written in any suitable programming language or can be implemented in hardware. Additionally, or alternatively, the instructions can be executed logically and/or virtually using separate threads on one or more processors.

[0061] For example, the controller may be operable to execute programming instructions or micro-control code associated with an operation of the UAV **100**. In this regard, the instructions may be software or any set of instructions that when executed by the processing device, cause the processing device to perform operations, such as running one or more software applications, receiving user input, processing user input, etc. Moreover, it should be noted that the controller as disclosed herein is capable of and may be operable to perform any methods, method steps, or portions of methods as disclosed herein. For example, in some embodiments, methods disclosed herein may be embodied in programming instructions stored in the memory and executed by the controller.

[0062] The memory devices may also store data that can be retrieved, manipulated, created, or stored by the one or more processors or portions of the controller. The data can include, for instance, data to facilitate performance of methods described herein. The data can be stored locally (e.g., on the controller) in one or more databases and/or may be split up so that the data is stored in multiple locations. In addition, or alternatively, the one or more database(s) can be connected to the controller through any suitable network(s), such as through a high bandwidth local area network (LAN) or wide area network (WAN). In this regard, for example, the controller may further include a communication module or interface that may be used to communicate with one or more other component(s) of the UAV **100**, the controller, an external controller, or any other suitable device, e.g., via any suitable communication lines or network(s) and using any suitable communication protocol. The communication interface can include any suitable components for interfacing with one or more network(s), including for example, transmitters, receivers, ports, controllers, antennas, or other suitable components.

[0063] Returning to FIGS. **1** and **2**, mechanism **200** may be configured to be mounted to any UAV, such as the exemplary UAV **100**. The mechanism **200** may generally include a landing gear **202**, a storage system **204**, a robotic arm housing **206**, a counterweight housing **208**, a robotic arm **210**, an actuator **250** (FIG. **4**), and an end effector **214**. End effector **214**, e.g., a gripper or any other suitable device which permits interaction with external objects, may be provided at a distal end **216** of the arm **210**. For example, the robotic arm **210** may extend from a proximal end **218** (see, e.g., FIG. **17**) which is fixedly mounted within the robotic arm housing **206** to the distal end **216**. Any of the exemplary end effectors according to the embodiments illustrated in FIGS. **3-40** may be incorporated into the mechanism **200** and mounted to any suitable UAV **100**, such as but not limited to the exemplary quadcopter **100** shown in FIGS. **1** and **2**. Turning briefly to FIG. **5**, the mechanism **200** may extend vertically between a top side **201** and a bottom side **203**, and may extend transversely, e.g., along a direction perpendicular to the vertical direction, between a rear side **205** and a front side **207**.

[0064] FIG. **3** provides an enlarged view of the end effector **214** as illustrated in FIG. **2**. In particular, the end effector **214** depicted in FIG. **3** is a compliant end effector **214**, e.g., is comprised of a compliant material, e.g., a rigid plastic material which has spring-like qualities, whereby the compliant end effector may be automatically actuated in a manner similar to a mouse trap, as will be described in further detail below. As may be seen, e.g., in FIGS. **2** and **3**, the end effector **214** may include a pair of opposing compressible elements **220** for gripping an object **1000** therebetween.

[0065] FIG. **4** provides a side view of the mechanism **200**, including the storage system **204** thereof, and objects **1000** contained in the storage system **204**. The end effector **214** may, for example, be configured to release or open when the robotic arm **210** retracts, thereby releasing an object held between the compressible elements **220**, such that the object falls into the storage system **204**. In particular, the storage system **204** may include a frame comprising a plurality of frame members **222** coupled to the landing gear **202** below the robotic arm housing **206** and a net **224** (e.g., or mesh, webbing, or other similar material) mounted on the frame members **222** of the storage system **204**. Thus, the object dropped by the end effector **214** when the robotic arm **210** returns to the retracted position may be caught by the storage system **204**, e.g., the net **224** thereof, and retained while the UAV **100** is able to collect additional objects without having to make a return flight.

[0066] FIGS. **5-10** provide various views of the robotic arm **210** and illustrate an exemplary transition or sequence of motion for the folding robotic arm **210** from a retracted, folded position (FIGS. **5** and **6**), through an intermediate position (FIGS. **7** and **8**) to an extended, unfolded, position (FIGS. **9** and **10**). The robotic arm **210** may include a plurality of links **212** which are connected at a plurality of joints **213**. Each joint **213** may be a movable joint, such as a revolute joint. The robotic arm **210** may thus define a linkage, such as a Kempe kite inversor or other suitable linkage. For example, the linkage may be configured to fold and unfold, e.g., as the robotic arm **210** extends and retracts, such that the distal end **216** of the robotic arm **210** travels along a single straight line, e.g., generally along the transverse direction towards the front side **207** (FIG. **5**) of the mechanism **200**. Also as may be seen in FIGS. **5-10**, the counterweight housing **208** may move in a direction generally opposite the direction of the arm **210** when the arm **210** extends and retracts. For example, when the arm **210** moves forward (towards the front side **207** of the mechanism **200**) to or towards the extended position, the counterweight housing **208** may move rearward (towards the rear side **205** of the mechanism **200**), e.g., away from the robotic arm housing **206**. Accordingly, shifting of the center of gravity of the mechanism **200** while extending and retracting the arm **210** may be reduced or eliminated by moving the counterweight housing **208** in the generally opposite direction from the direction of movement of the folding robotic arm **210**.

[0067] The mechanism **200** may include an actuator **250** (FIG. **4**), and the actuator **250** may be configured to move the folding robotic arm **210** between the retracted position, e.g., FIGS. **5** and **6**, and the extended position, e.g., FIGS. **9** and **10**. The actuator **250** may be coupled to the folding

robotic arm **210** via an actuation mechanism **252** (FIGS. **18-21**) to move the folding robotic arm **210** between the retracted position and the extended position. For example, the actuator **250** may be or include a motor, such as a DC motor, e.g., a brushless DC motor, a stepper motor, or a servo motor. Any suitable motor may be provided, such as a motor which has a high holding torque to overcome the weight of the folding robotic arm **210** and an external object, such as a sample acquired using the folding robotic arm **210**. Preferably, the motor may have a high torque and low speed, or may provide precision control of the position of the folding robotic arm **210**. The actuation mechanism **252**, which will be described further below, may include a Scotch yoke **254** to convert rotational movement of the motor into linear translational movement.

[0068] FIG. **11** provides a sectioned, exploded view of an exemplary embodiment of the mechanism **200**. As may be seen, e.g., in FIG. **11**, the landing gear **202** may include skids **226** which are mounted, e.g., coupled and/or fastened, to legs **228** of the landing gear **202**. The end effector **214** (e.g., compliant gripper in the illustrated exemplary embodiment of FIG. **11**, which may also be any suitable gripper or other end effector in various embodiments of the present disclosure) may be coupled to the distal end **216** of the folding robotic arm **210** by a bracket **215**. The actuation mechanism **252** may include a scotch yoke **254**, an actuator link **256**, a guide rail **258**, a bearing **260** engaged within a first loop of the scotch yoke **254** and a pin **261** (sec, e.g., FIGS. **19-21**) engaged within a second loop of the scotch yoke **254**. Spacers **262** may be provided between links **212** of the folding robotic arm **210**, and the folding robotic arm **210** may further include mechanical stops **264**. A bracket **266** may be positioned at the top of the landing gear **202**, e.g., for mounting connectors, such as the illustrated straps (e.g., as may be seen in FIG. **4**), which may be used to connect the drone **100** to the mechanism **200**.

[0069] Additional perspective views of the robotic arm housing **206** in isolation from other components of the mechanism **200** are provided in FIGS. **12** and **13**. As may be seen, e.g., in FIG. **12**, the robotic arm housing **206** may include a gripper reset mechanism **268**, such as a hooked projection which extends downward from a top internal surface of the robotic arm housing **206**. The gripper reset mechanism **268** may be provided in embodiments where the end effector **214** is a compliant gripper (e.g., as illustrated in FIGS. **2-11** and **23-25**, and described further below in reference to FIGS. **23-25**), and the gripper reset mechanism **268** may be positioned and configured to contact the compliant gripper when the compliant gripper is mounted to the distal end **216** of the arm **210** and the arm **210** returns to the retracted position from the extended position (or a partially extended position). For example, the gripper reset mechanism **268** may be positioned and configured to contact the compliant gripper as the compliant gripper travels back or rearward, e.g., towards the rear side **205** of the mechanism **200**, into the robotic arm housing **206**. Such contact of the compliant gripper by the gripper reset mechanism **268** may thus reset the compliant gripper to the open position as the arm **210** retracts.

[0070] FIG. **14** provides a perspective view of the counterweight housing **208** in isolation from other components of the mechanism **200**, and FIG. **15** provides a perspective view of a back cover **209** thereof. As mentioned above, the weight of the counterweight housing **208** itself, including the back cover **209** mounted thereto, may be used to offset shifting the center of gravity of the mechanism **200** when the folding robotic arm **210** extends and retracts. In addition, one or more other components of the mechanism **200** may be mounted within the counterweight housing **208** and enclosed by the back cover **209** of the counterweight housing **208**, whereby the weight of such component(s) further adds to the counterbalancing of the arm **210** as the arm **210** extends and retracts. For example, the actuator **250**, e.g., motor, may be mounted within the counterweight housing **208** (e.g., as may be seen in FIG. **4**) such that the actuator **250** moves with the counterweight housing **208**.

[0071] Additional perspective views of the robotic arm **210** in isolation from other components of the mechanism **200** are provided in FIGS. **16** and **17**. In particular, the robotic arm **210** is illustrated in the folded, retracted position in FIG. **16** and in the unfolded, extended position in FIG. **17**. Mechanical stops **264** may be provided to reduce or prevent over-extension of the robotic arm **210**. For example, one or more mechanical stops **264** may be mounted to one or more respective links **212** in the linkage which comprises the robotic arm **210**, and the mechanical stop **264** (or each mechanical stop **264** when more than one is provided) may be positioned and configured to abut a neighboring link **212** when in the extended position, thereby obstructing further extension of the robotic arm **210**.

[0072] As may be seen, e.g., in FIGS. **16** and **17**, each link **212** in the linkage may include an internal open web, e.g., defined by a plurality of struts **270** (FIG. **16**) which extend within the link **212** and which define voids or apertures therebetween. For example, the struts **270** may be positioned and oriented so as to define a honeycomb pattern of hexagonal voids within the internal open web of each link **212**. The internal open web in each link **212** may reduce the weight thereof, and consequently of the robotic arm **210** overall, while retaining structural strength of the links **212**, and the linkage collectively, to support the torque and other loads applied to the robotic arm **210** during extension, retraction, and retrieval of samples (and/or other manipulations of one or more objects **1000** by the end effector **214**).

[0073] Additional details of the actuation mechanism **252** may be seen in FIGS. **18-21**. FIG. **18** provides a perspective view of a portion of the mechanism **252**, with the actuation mechanism **252**, e.g., actuation link **256** thereof, in an extended position. In FIGS. **18-21**, the front side **207** of the mechanism **200** is oriented towards the left side of the page. Thus, it can be seen in FIG. **18** that the actuation link **256** extends forward of the robotic arm housing **206** in the extended position. As illustrated throughout the accompanying FIGS., the actuation link **256** may be coupled to one of the links **212** of the robotic arm **210** to transfer motion of the actuation link **256** to the robotic arm **210**, whereby movement of the actuation link **256** by the actuator **250** is used to extend and retract the robotic arm **210**. FIG. **19** provides a side view of the actuation mechanism **252** in the retracted position. As may be seen in FIG. **19**, when in the retracted position, the bearing **260** is positioned at a back end of the first loop of the scotch yoke **254** and the pin **261** is positioned at a bottom end of the second loop of the scotch yoke **254**. Turning now to FIG. **20**, where the actuation mechanism **252** is illustrated in an intermediate position between the retracted position of FIG. **19** and the extended position of FIG. **21**, it can be seen that the actuation link **256** is rotated downward and forward from the retracted position

as the robotic arm **210** is thereby urged towards the extended position. In the extended position, e.g., as illustrated in FIG. **21**, the bearing **260** is positioned at a front end of the first loop of the scotch yoke **254** and the pin **261** is positioned at a bottom end of the second loop of the scotch yoke **254**, with the pin **261** having reciprocated between the top end (e.g., as illustrated in FIG. **20**) of the second loop and the bottom end of the second loop during movement of the folding robotic arm **210** between the retracted and extended positions.

[0074] FIG. **22** provides a perspective view of the landing gear **202** in isolation. The landing gear **202** may define the total vertical extent of the mechanism **200**, such as the landing gear **202** may extend between the pair of skids **226** at the bottom end **203** of the mechanism **200** and a connector, e.g., bracket **266**, at the top end **201** of the mechanism **200**. In other words, the skids **226** may be at the lowest extent of the mechanism **200** and thereby define the bottom end **203** of the mechanism, while the connector bracket **266** may be positioned at the uppermost extent of the mechanism **200** and thereby define the top side **201** of the mechanism **200**. For example, the robotic arm housing **206** (see, e.g., FIGS. **4-6**) may be installed underneath the connector bracket **266**. The connector is configured to couple to the lower side of the body of the unmanned aerial vehicle.

[0075] An exemplary end effector **214**, e.g., a compliant gripper, is illustrated in a perspective view in FIG. **23** and a top view in FIG. **24**. In exemplary embodiments which include the compliant gripper **214**, the gripper may be formed of a resilient flexible material to provide a spring force, e.g., the compliant gripper **214** may be biased to the closed position such that the compliant gripper **214** may snap closed, e.g., in a "mouse trap" manner. The compliant gripper **214** is illustrated in a closed position in FIGS. **23** and **24**. The compliant gripper **214** may include two opposing claws **278** at opposite sides of the compliant gripper **214** which are positioned and oriented with tips **280** of each claw **278** facing each other. The compliant gripper **214** may also include a push rod **274** which is linked to the claws **278**. When the push rod **274** is slid forward, the complaint gripper **214** may thereby be primed, e.g., in an open position with the claws **278**, e.g., tips **280** thereof, spaced apart from each other and positioned and configured to move rapidly to the closed position due to spring force of the gripper material. For example, the compliant gripper **214** may include wings which extend from the push rod **274** to each claw **278** in an oblique direction. Pushing the push rod **274** forward (e.g., to the left on the page in FIGS. **23** and **24**, such as towards the front side **207** of the mechanism **200** when the compliant gripper **214** is mounted to the arm **210**) may, for example, translate the oblique wings forward and outward, thereby spreading the claws **278** apart to open the compliant gripper **214**. When an object **1000** (sec, e.g., FIGS. **2** and **36-38**) contacts the push rod **274**, e.g., at a tip **276** of the push rod **274**, e.g., as the arm **210** with the compliant gripper **214** mounted thereon moves towards the object **1000**, the object **1000** may thusly urge the push rod **274** rearwards (e.g., towards rear side **205** of the mechanism **200**) which also pulls the oblique wings together and rearward, thereby moving the claws **278** towards each other and to the closed position. For example, spring tension may be retained in the claws **278** and wings of the compliant gripper **214** when in the open position, such that a small force on the tip **276** of the push rod **274** is sufficient to trigger the compliant gripper **214** to close on the object **1000** when the object **1000** touches the tip **276** of the push rod **274**.

[0076] Also as may be seen in FIGS. **23** and **24**, the tips **280** of the claws **278** of the compliant gripper **214** may be enlarged and may have a rectangular prismatic shape. Accordingly, as may be seen for example in FIG. **25**, compressible elements **220** may be mounted on each claw **278** at the tip **280** thereof, e.g., with the shape of the tip **280** providing increased contact area between the respective claw **278** and the compressible element **220** for more secure connection and retention of the compressible element **220** on the claw **278**.

[0077] Various possible shapes and configurations may be provided for the compressible elements **220**. Such various compressible elements **220** may be provided on any suitable end effector **214** according to embodiments of the present disclosure. For example, one such compressible element **220** is illustrated in FIG. **26**, and may be provided on the compliant gripper **214**, e.g., of FIGS. **23** and **24**, or on any other suitable end effector, e.g., gripper, in various embodiments of the present disclosure. Additional exemplary compressible elements **220** are also illustrated in FIGS. **34-38**, which may be used with any suitable end effector **214**, such as the compliant gripper, the shell gripper, or other similar grippers or other end effectors.

[0078] Turning now to FIGS. **27-33**, in some embodiments, the end effector **214** may be a shell gripper, e.g., the gripper **214** may include a first hollow shell **282** coupled to a first handle **284** and a second hollow shell **282** coupled to a second handle **284**. In such embodiments, the first hollow shell **282** and the first handle **284** may be mirrored with the second hollow shell **282** and the second handle **284**. As mentioned, the gripper **214** may include a pair of compressible elements **220**, such as a first compressible element **220** of the pair of opposing compressible elements **220** mounted in the first hollow shell **282** and a second compressible element **220** of the pair of opposing compressible elements **220** mounted in the second hollow shell **282**. In such embodiments, e.g., as illustrated in FIG. **29**, the gripper **214** may further include a rack and pinion **290** (e.g., including rotary gear **292** and opposing linear gears **294**) configured to move the first hollow shell **282** and the second hollow shell **282** between an open position and a closed position.

[0079] As may be seen in FIGS. **27** and **28**, the gripper **214** may include a housing **300** and an actuator, e.g., motor **298**, may be mounted in the housing **300**. The motor **298** may be coupled to the rotary gear **292** in order to actuate the rack and pinion **290**, e.g., the rotary gear **292** may be mounted on a drive shaft of the motor **298** such that the motor **298** can drive rotation of the rotary gear **292**. Each shell **282** may be mounted on a respective handle **284**, and the linear gears **294** of the rack and pinion **290** may extend from each handle **284**. The shells **282** may be hollow, whereby a compressible element **220** may be received in and over the hollow portion of each shell **282**. In such embodiments, the gripper **214** may also include a lock **286** for retraining the compressible element **220** in the shell **282**. A rubber bumper or stop **288** may be provided at an outermost side of each handle **284**.

[0080] A controller, e.g., an integrated circuit such as printed circuit board (PCB), including one or more processing devices, memory, etc., as described above with respect to the controller of the UAV, may be positioned within a controller case **296**, and the controller of the gripper **214** may be in operative communication with components of the

gripper **214**, such as the motor **298**, to direct operation thereof, e.g., to cause the rotary gear **292** of the rack and pinion **290** to be driven and thereby open and/or close the gripper **214** by moving the shells **282** together or apart.

[0081] FIG. **29** provides a section view through the exemplary end effector, e.g., gripper, **214** of FIGS. **27** and **28**, in order to illustrate the rack and pinion **290** in an assembled position. As may be seen, e.g., in FIG. **29**, the rack and pinion **290** may be configured to open the gripper **214** by moving the shells **282** apart from each other, e.g., in generally opposite linear directions, when the rotary gear **292** is rotated in a first direction, e.g., clockwise on the page in FIG. **29**, and to close the gripper **214** by moving the shells **282** towards each other when the rotary gear **292** is rotated in a second direction opposite the first direction, e.g., counterclockwise on the page in FIG. **29**.

[0082] FIG. **30** provides a perspective view of an exemplary hollow shell **282** of the gripper **214**, and FIG. **31** illustrates a sectioned perspective view of a portion of the exemplary hollow shell **282**. In particular, as may be seen in FIG. **30**, the hollow shell **282** may include a slot **287** defined in a perimetrical wall of the hollow shell **282**. As may be seen, e.g., in FIG. **31**, the lock **286** may extend into and through the slot **287** in the shell **282**, such that the lock **286** may engage the compressible element **220** (see, e.g., FIGS. **27** and **28**) to secure the compressible element **220** in place within the hollow shell **282**. Additional perspective views are provided of an exemplary handle **284** in FIG. **32** and of an exemplary rubber stop **288** in FIG. **33**.

[0083] As mentioned above, various compressible elements **220** may be provided with either the compliant gripper (e.g., FIGS. **23-25**), or the shell gripper (e.g., FIGS. **27-33**), and some examples of possible complaint grippers are illustrated in perspective views in FIGS. **34** and **35**. For example, the compressible element **220** may include mesh pattern and a rectangular shape, as illustrated in FIG. **34**, which may be suitable for gripping relatively large, flat objects. As another example, the compressible element **220** may include a curved shape, such as the exemplary compressible element **220** illustrated in FIG. **34**, which may be suitable for gripping curved, e.g., cylindrical, objects.

[0084] Additional exemplary compressible elements **220** are illustrated in FIGS. **36**, **37**, and **38**. As may be seen in FIGS. **36-38**, the compressible element **220** may flex around and/or about an object **1000** to be gripped, including objects **1000** of various sizes, such that the compressible element **220** provides increased contact area with the object **1000** being gripped for improved engagement and holding of the object **1000** within the gripper **214**. Additionally, the compressible element **220** may yield to the more rigid object **1000** be gripped, thereby reducing or preventing damage to the object **1000** from the pressure of the gripper.

[0085] As mentioned, various end effectors **214** may be provided with the exemplary mechanism **200** of the present disclosure. As an example, e.g., as illustrated in FIG. **39**, a spraying end effector **214** may be provided. The storage system **204** may also be provided in various forms, such as a tank or other liquid container, e.g., as illustrated in FIG. **39**. In additional embodiments, the storage system **204** may be movable, e.g., may be coupled to the actuation mechanism **252** whereby the storage system **204** moves upward and/or forward when the arm **210** retracts to bring the storage system **204** closer to the end effector **214** for easier and more reliable transfer of objects from the end effector, e.g., gripper, **214** to the storage system **204**.

[0086] In some exemplary embodiments, the folding robotic arm **210** may be positioned and oriented at an oblique angle to the body **102** of the UAV **100**, such as the folding robotic arm **210** may fold and unfold along a single linear direction or axis, and the single linear direction or axis may be oriented along an angle that is oblique to the vertical direction and/or oblique to the body **102** of the UAV **100**. For example, in some embodiments, the arm **210** may be movable along an arc **310** to provide an adjustable angle, e.g., up or down, relative to the remainder of the mechanism **200** and/or a UAV **100** attached thereto, in order to provide movement of the folding robotic arm **210** between the retracted and extended positions at an oblique angle to the body **102**.

[0087] This written description uses examples to disclose the invention, including the best mode, and also to enable any person skilled in the art to practice the invention, including making and using any devices or systems and performing any incorporated methods. The patentable scope of the invention is defined by the claims, and may include other examples that occur to those skilled in the art. Such other examples are intended to be within the scope of the claims if they include structural elements that do not differ from the literal language of the claims, or if they include equivalent structural elements with insubstantial differences from the literal languages of the claims.

What is claimed is:

1. A mechanism for an unmanned aerial vehicle, the unmanned aerial vehicle comprising a body and at least one rotor coupled to the body, the body comprising an upper side and a lower side opposite the upper side, the rotor configured to generate lift in an upward direction, the mechanism configured to mount to the lower side of the body, the mechanism comprising:

a landing gear, the landing gear extending between a pair of skids at a bottom end of the mechanism and a connector at a top end of the mechanism, the connector configured to couple to the lower side of the body of the unmanned aerial vehicle;

a storage system coupled to the landing gear proximate the pair of skids;

a robotic arm housing mounted to the landing gear at a bottom side of the connector;

a counterweight housing adjacent to the robotic arm housing;

a robotic arm movably mounted to the robotic arm housing, the robotic arm movable between a retracted position wherein the robotic arm is folded within the robotic arm housing and an extended position wherein the robotic arm is unfolded and a distal end of the robotic arm is spaced apart from the robotic arm housing in front of the robotic arm housing;

an actuator coupled to the robotic arm to move the robotic arm between the retracted position and the extended position; and

an end effector coupled to the distal end of the robotic arm, the end effector comprising a gripper with a pair of opposing compressible elements for gripping an object between the pair of compressible elements.

2. The mechanism of claim **1**, wherein the robotic arm is configured to move from the retracted position to the

extended position such that the distal end of the robotic arm moves along a single straight line.

3. The mechanism of claim **1**, wherein the actuator is also coupled to the counterweight housing, whereby the actuator is configured to move the counterweight housing backwards when the robotic arm moves forwards.

4. The mechanism of claim **1**, wherein the actuator is coupled to the robotic arm via an actuation mechanism.

5. The mechanism of claim **4**, wherein the actuation mechanism comprises a scotch yoke.

6. The mechanism of claim **5**, wherein the actuator is also coupled to the counterweight housing via the scotch yoke, whereby the actuator is configured to move the counterweight housing in a direction opposite the robotic arm when the robotic arm moves between the retracted position and the extended position.

7. The mechanism of claim **1**, wherein the gripper is a compliant gripper comprising a push rod, the compliant gripper configured to move from an open position to a closed position in response to pressure on the push rod.

8. The mechanism of claim **1**, wherein the gripper comprises a first hollow shell coupled to a first handle, and a second hollow shell coupled to a second handle, wherein the first hollow shell and the first handle are mirrored with the second hollow shell and the second handle, a first compressible element of the pair of opposing compressible elements mounted in the first hollow shell, and a second compressible element of the pair of opposing compressible elements mounted in the second hollow shell, and wherein the gripper further comprises a rack and pinion configured to move the first hollow shell and the second hollow shell between an open position and a closed position.

9. The mechanism of claim **1**, wherein the robotic arm comprises a linkage, and wherein each link in the linkage comprises an internal open web.

10. The mechanism of claim **1**, wherein the storage system comprises a frame coupled to the landing gear and a net mounted on the frame.

11. A mechanism for an unmanned aerial vehicle, the unmanned aerial vehicle comprising a body and at least one rotor coupled to the body, the body comprising an upper side and a lower side opposite the upper side, the rotor configured to generate lift in an upward direction, the mechanism configured to mount to the lower side of the body, the mechanism comprising:

a landing gear;

a storage system;

a robotic arm housing;

a counterweight housing;

a robotic arm movably mounted to the robotic arm housing, the robotic arm movable between a retracted position wherein the robotic arm is folded within the robotic arm housing and an extended position wherein the robotic arm is unfolded and a distal end of the robotic arm is spaced apart from the robotic arm housing in front of the robotic arm housing;

an actuator coupled to the robotic arm to move the robotic arm between the retracted position and the extended position; and

an end effector coupled to the distal end of the robotic arm, the end effector comprising a gripper with a pair of opposing compressible elements for gripping an object between the pair of compressible elements.

12. The mechanism of claim **11**, wherein the robotic arm is configured to move from the retracted position to the extended position such that the distal end of the robotic arm moves along a single straight line.

13. The mechanism of claim **11**, wherein the actuator is also coupled to the counterweight housing, whereby the actuator is configured to move the counterweight housing backwards when the robotic arm moves forwards.

14. The mechanism of claim **11**, wherein the actuator is coupled to the robotic arm via an actuation mechanism.

15. The mechanism of claim **14**, wherein the actuation mechanism comprises a scotch yoke.

16. The mechanism of claim **15**, wherein the actuator is also coupled to the counterweight housing via the scotch yoke, whereby the actuator is configured to move the counterweight housing in a direction opposite the robotic arm when the robotic arm moves between the retracted position and the extended position.

17. The mechanism of claim **11**, wherein the gripper is a compliant gripper comprising a push rod, the compliant gripper configured to move from an open position to a closed position in response to pressure on the push rod.

18. The mechanism of claim **11**, wherein the gripper comprises a first hollow shell coupled to a first handle, and a second hollow shell coupled to a second handle, wherein the first hollow shell and the first handle are mirrored with the second hollow shell and the second handle, a first compressible element of the pair of opposing compressible elements mounted in the first hollow shell, and a second compressible element of the pair of opposing compressible elements mounted in the second hollow shell, and wherein the gripper further comprises a rack and pinion configured to move the first hollow shell and the second hollow shell between an open position and a closed position.

19. The mechanism of claim **11**, wherein the robotic arm comprises a linkage, and wherein each link in the linkage comprises an internal open web.

20. The mechanism of claim **11**, wherein the storage system comprises a frame coupled to the landing gear and a net mounted on the frame.

* * * * *