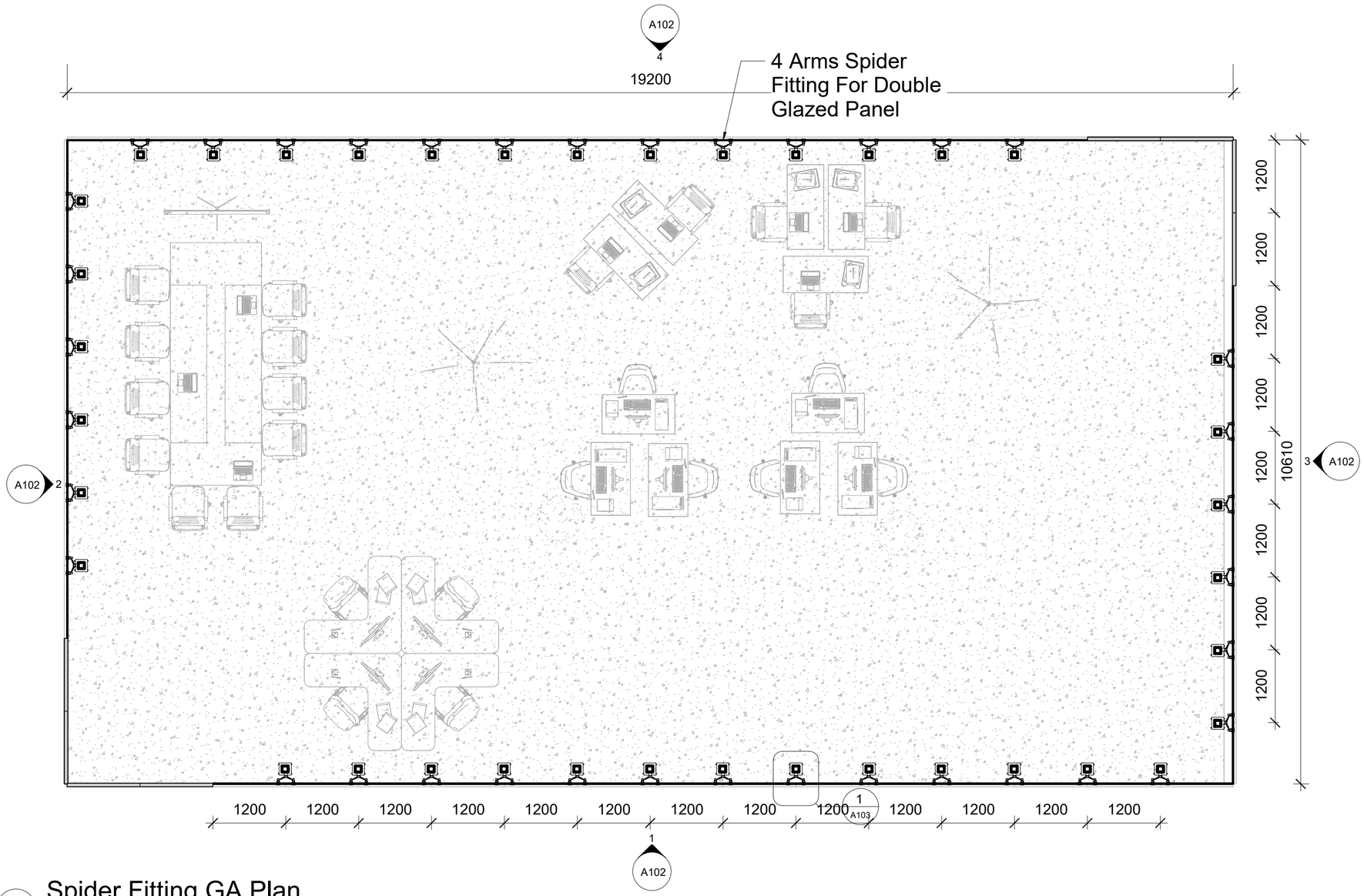

1 Spider Fitting GA Plan

1 : 50

www.autodesk.com/revit

Consultant Address Address Phone Fax e-mail	Consultant Address Address Phone Fax e-mail
Consultant Address Address Phone Fax e-mail	Consultant Address Address Phone Fax e-mail

No.	Description	Date

SWQ Estates

SWQ Office Block

Spider Glazing Details

Project number	0001
Date	25-12-25
Drawn by	SYD
Checked by	SYD

A101

Scale	1 : 50

12/29/2025 1:50:16 AM

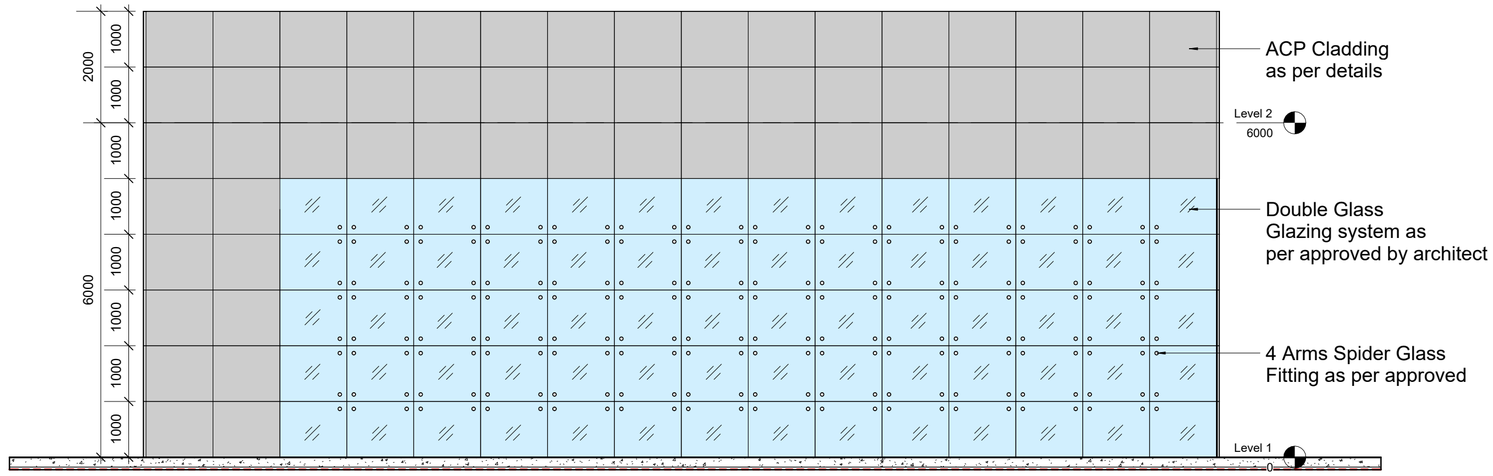

1 South
1 : 50

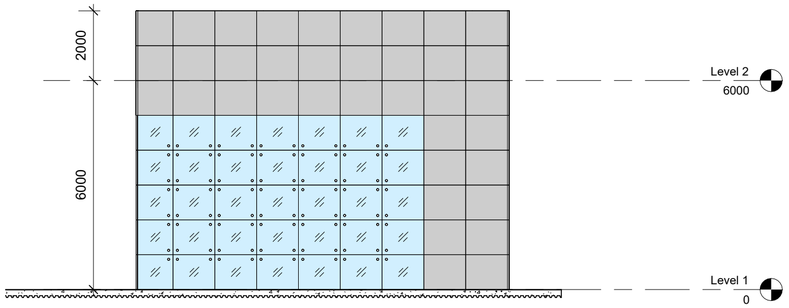

2 West
1 : 80

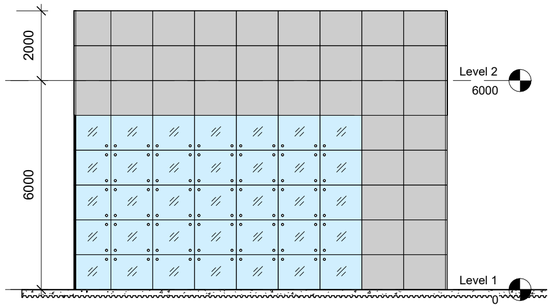

3 East
1 : 80

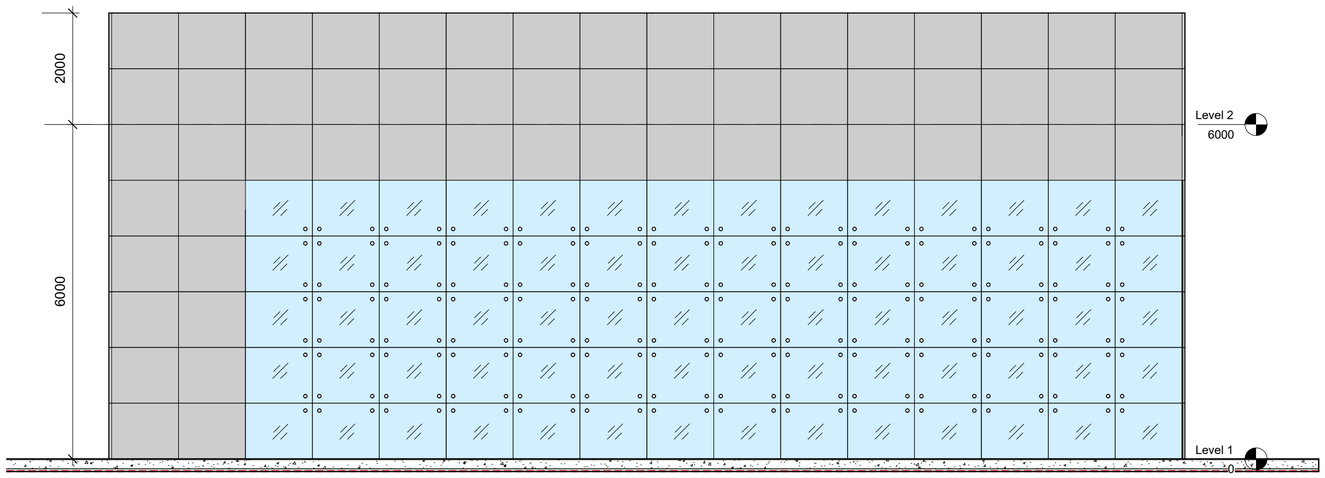

4 North
1 : 50

www.autodesk.com/revit

Consultant	Consultant
Address	Address
Address	Address
Phone	Phone
Fax	Fax
e-mail	e-mail

Consultant	Consultant
Address	Address
Address	Address
Phone	Phone
Fax	Fax
e-mail	e-mail

No.	Description	Date

SWQ Estates

SWQ Office Block

Spider Glazing Elevations

Project number	0001
Date	25-12-25
Drawn by	SYD
Checked by	SYD

A102

Scale	As indicated

12/29/2025 1:50:26 AM

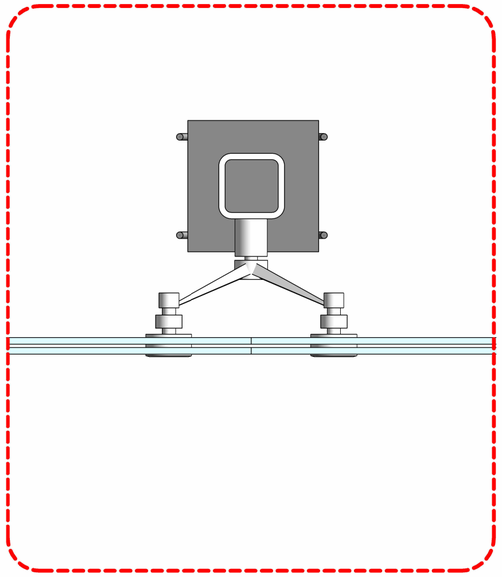

1 Spider Fitting Detail
1 : 6

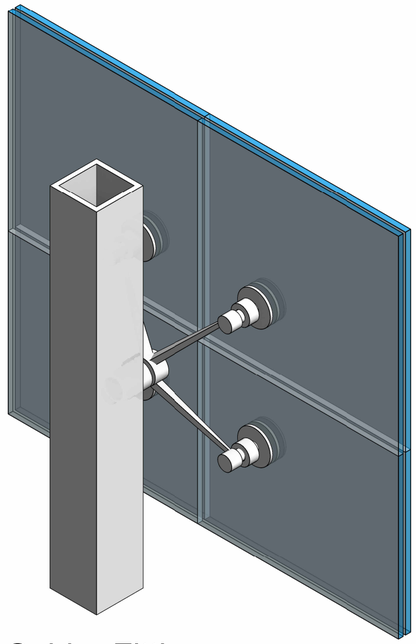

3 3D_Spider Fitting

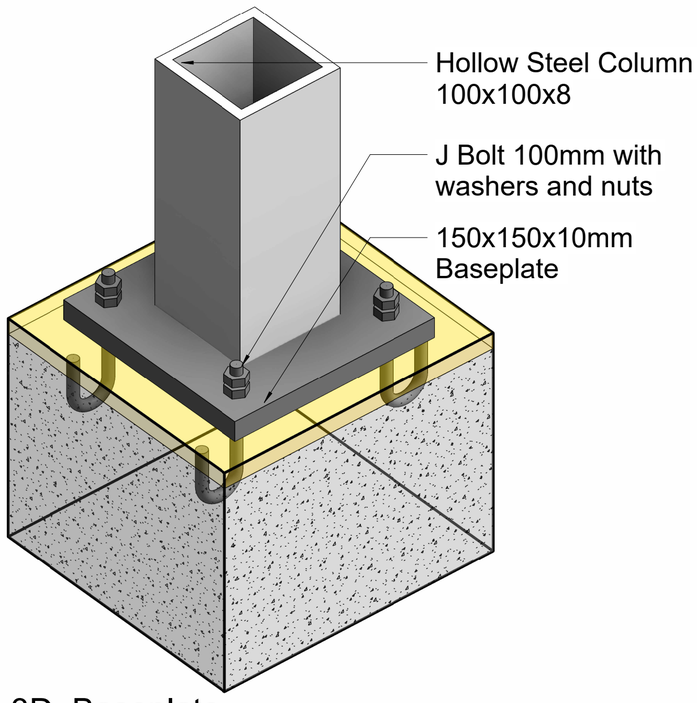

2 3D_Baseplate

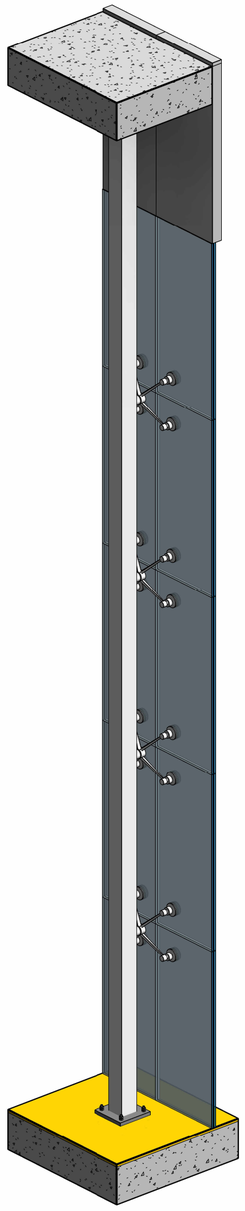

4 {3D} Copy 1

www.autodesk.com/revit

Consultant Address Address Phone Fax e-mail	Consultant Address Address Phone Fax e-mail
Consultant Address Address Phone Fax e-mail	Consultant Address Address Phone Fax e-mail

No.	Description	Date

SWQ Estates

SWQ Office Block

Spider Glazing Details

Project number	0001
Date	25-12-25
Drawn by	SYD
Checked by	SYD

A103

Scale	1 : 6

12/29/2025 1:50:34 AM