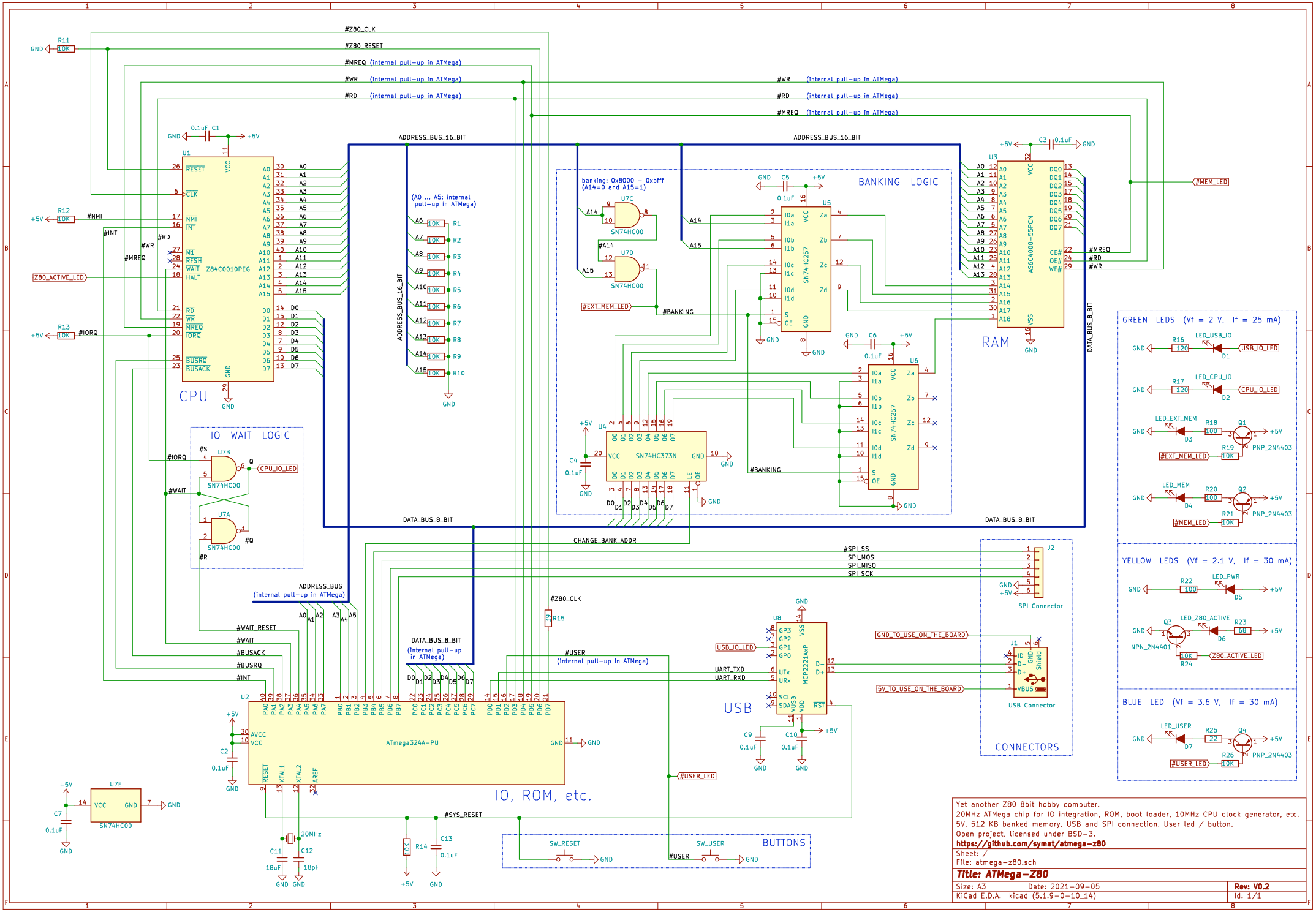

Yet another Z80 8bit hobby computer.
20MHz ATMega chip for IO integration, ROM, boot loader, 10MHz CPU clock generator, etc.
5V, 512 KB banked memory, USB and SPI connection. User led / button.
Open project, licensed under BSD-3.
https://github.com/symat/atmega-z80

Sheet: /
File: atmega-z80.sch

Title: ATMega-Z80

Size: A3	Date: 2021-09-05	Rev: V0.2
KiCad E.D.A. kicad (5.1.9-0-10_14)		Id: 1/1