1

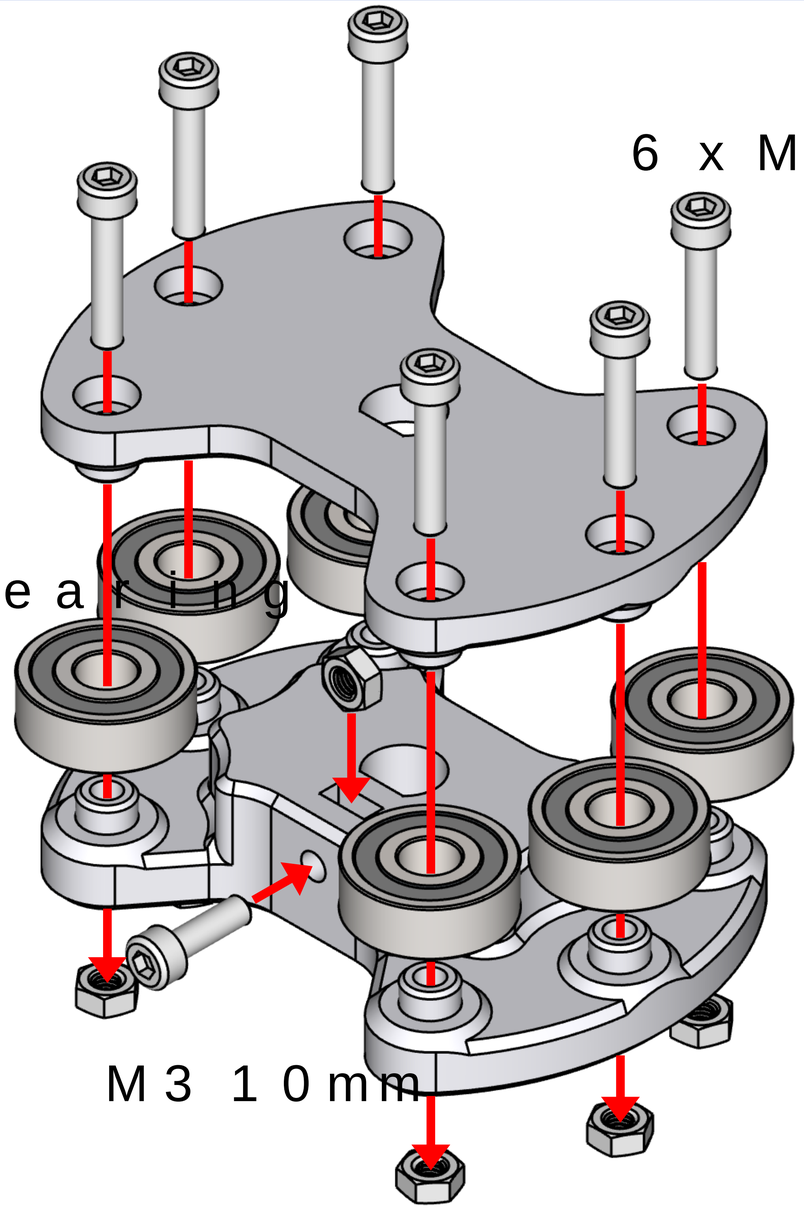

6 x M3 15mm

WaveGenB.stl

606ZZ Bearing

WaveGenA.stl

M3 10mm

2

Remove origin

MotorHolderB.stl

MotorHolderA.stl

M3 6mm

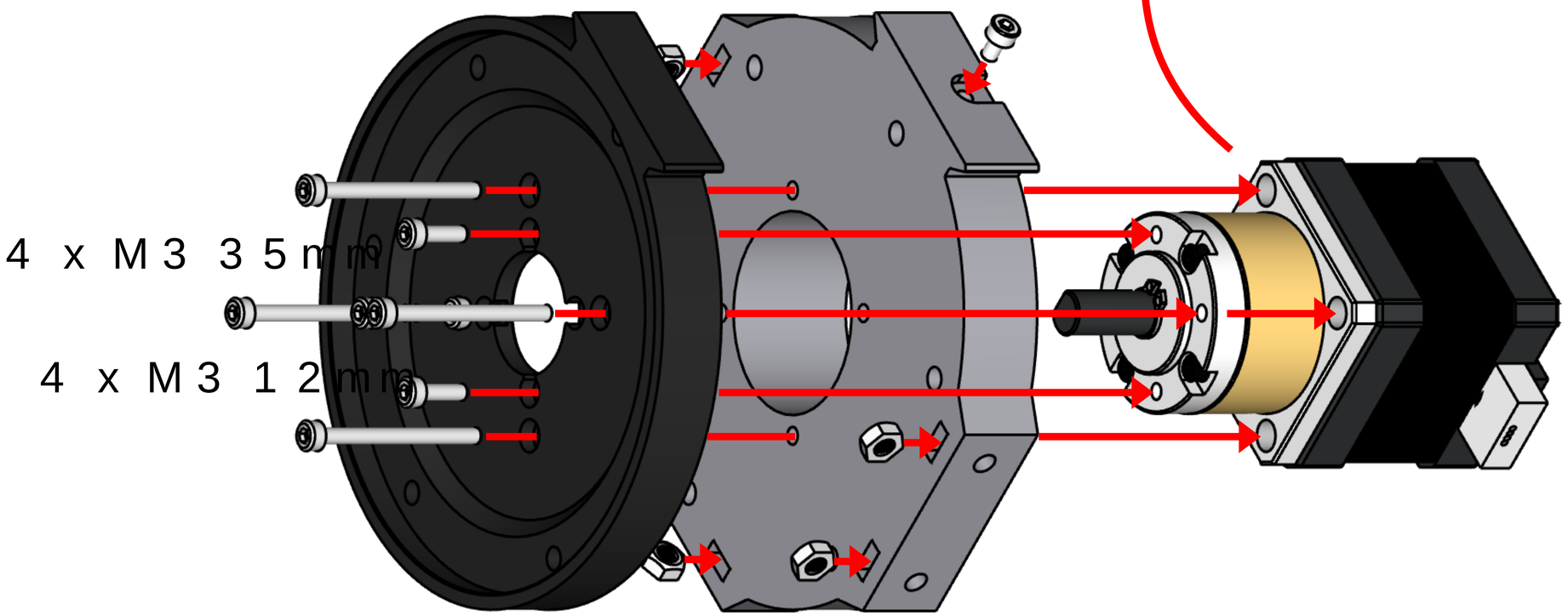

4 x M3 35mm

4 x M3 12mm

6 x M4 Nut

3

Allow 1~2mm clearance between WaveGenerater and MotorHolder.

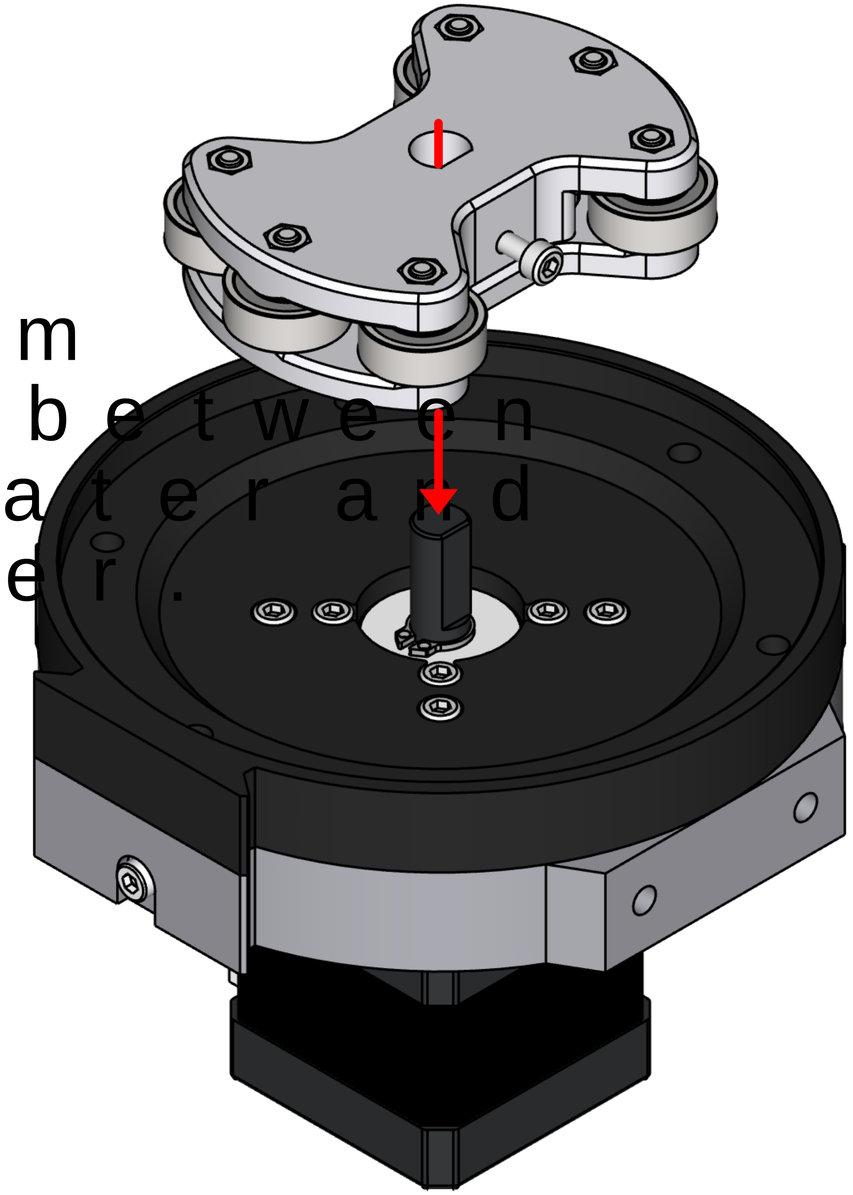

ϱ с ‚ С Ѓ с И з ‚ Њ ‚ о Э ‚ Њ ‚ Ц ж Ћ ‚ υ ḥ Ϫ ⁘ ‒ ≈ k k ɣ ΰ ϣ '

4

7

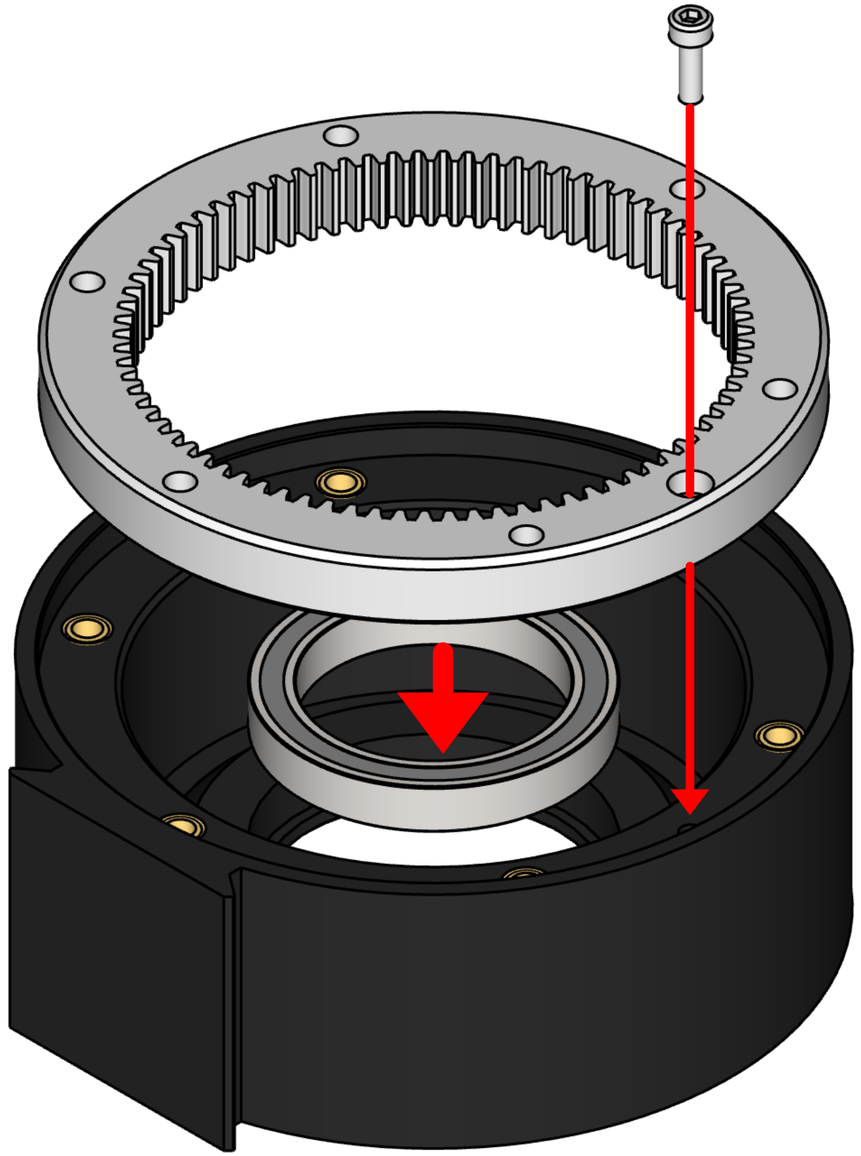

5

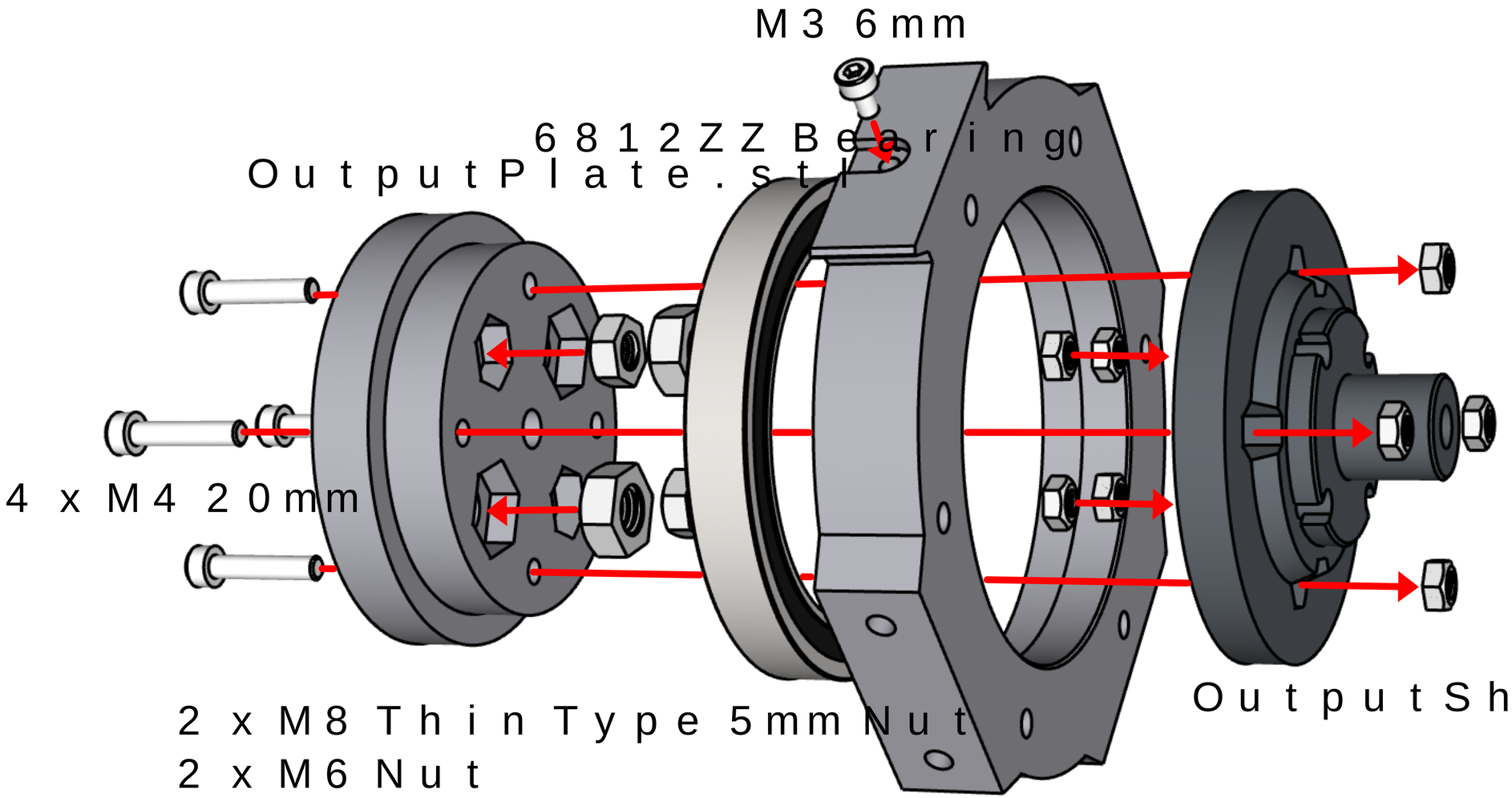
M3 6mm
6812ZZ Bearing
OutputPlate.stl
4 x M4 20mm
2 x M8 Thin Type 5mm Nut
2 x M6 Nut
OutputShaft.stl
BearingHolderB.stl

6

Apply grease !

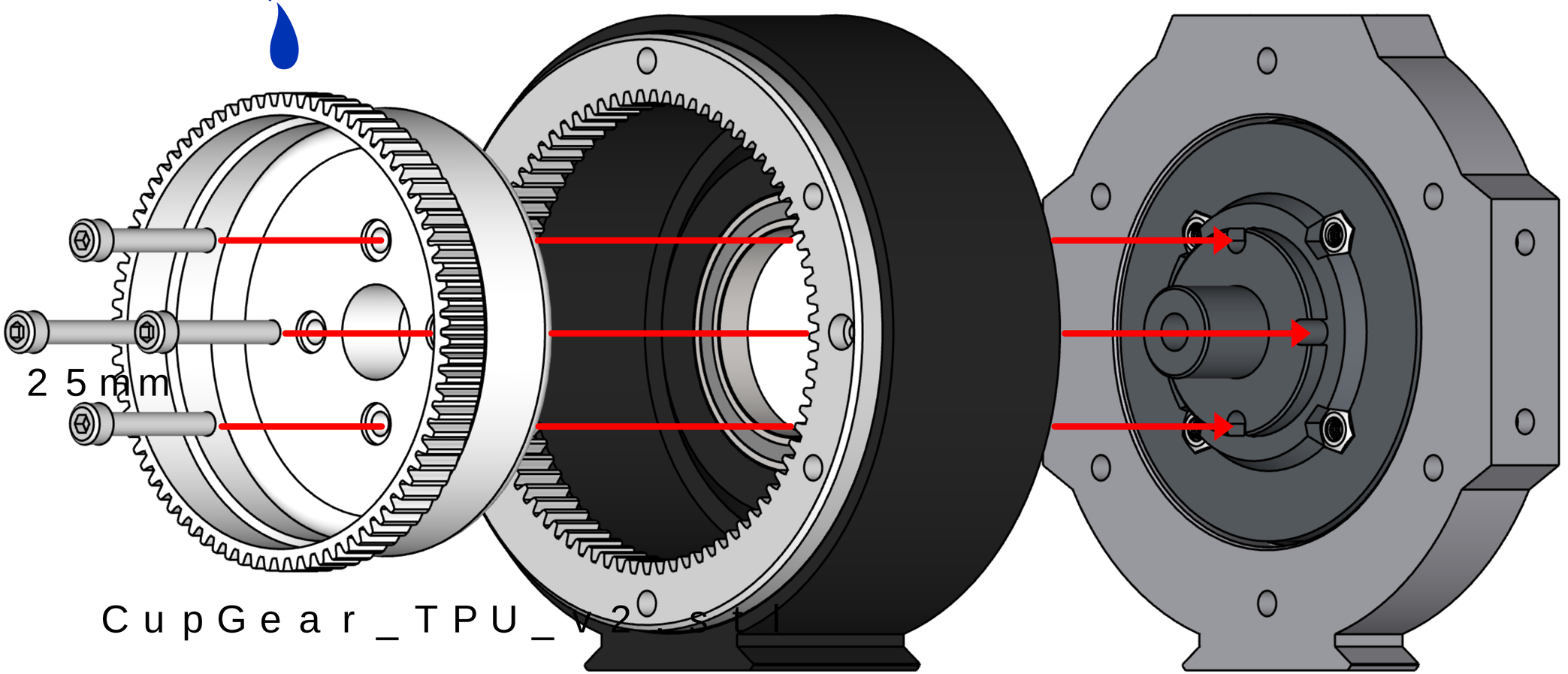

4 x M4 25mm

CupGear_TPU_v2.stl

9

BearingHolderA.stl

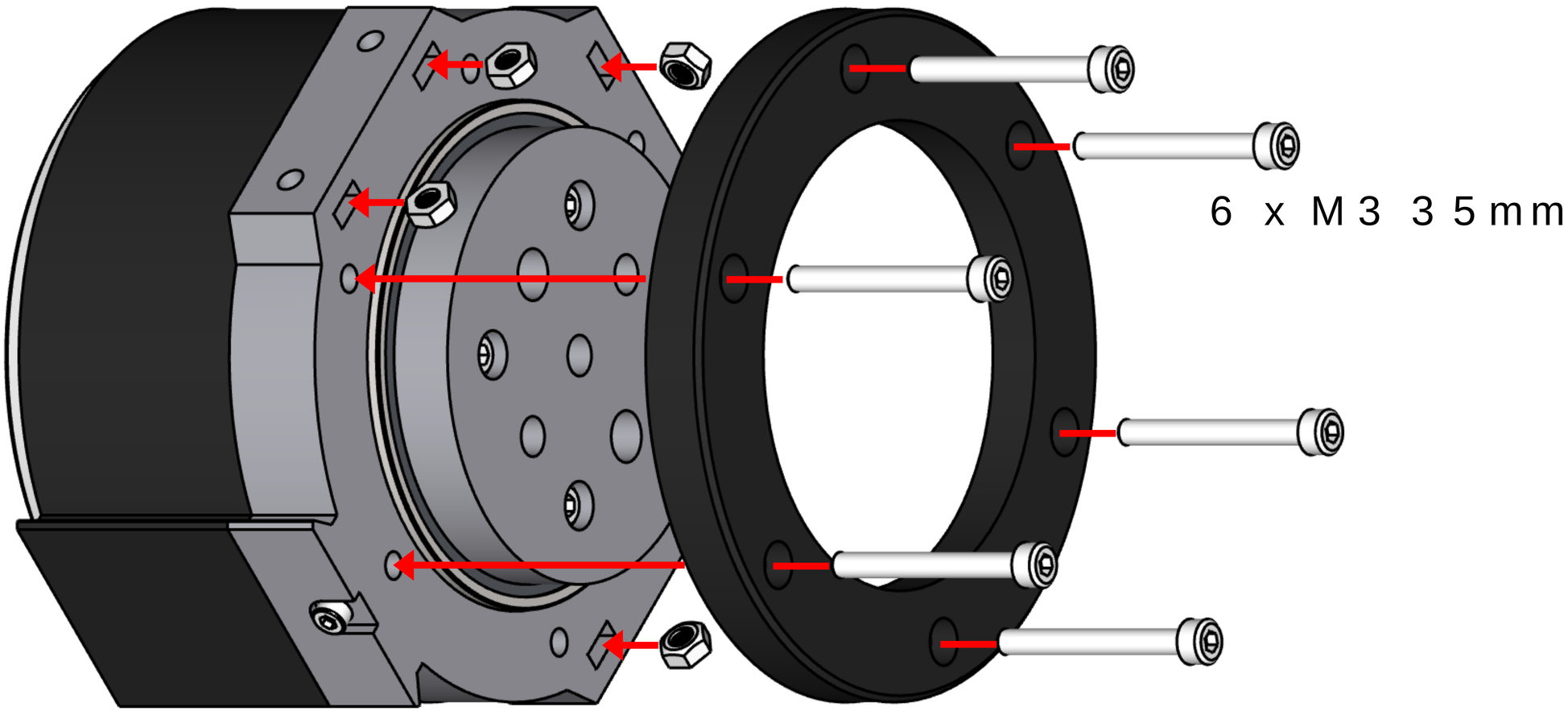

6 x M3 35mm

6 x M4 Nut

8

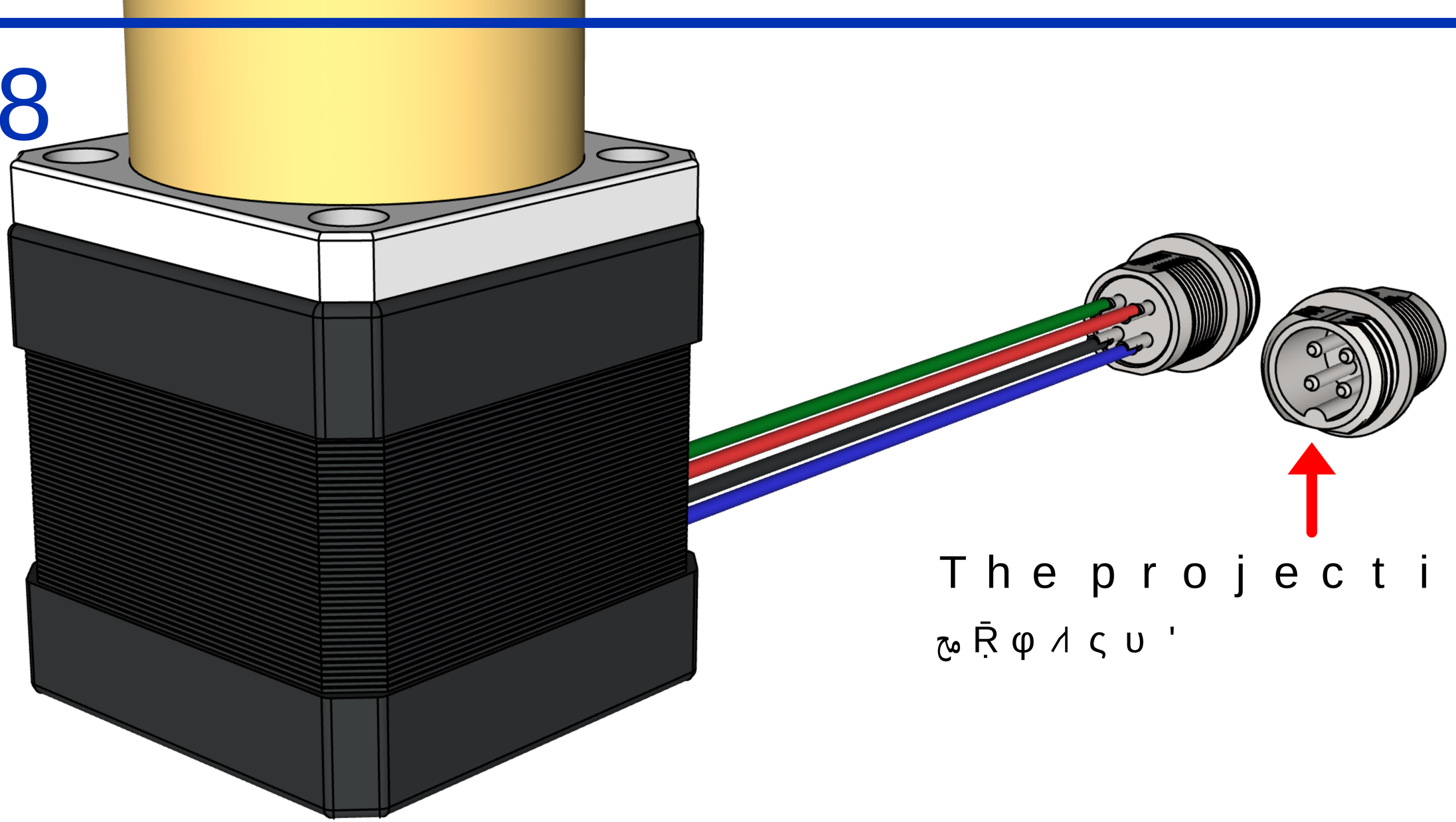

The projection is

ᴇ Ṛ φ ʌ ς υ '
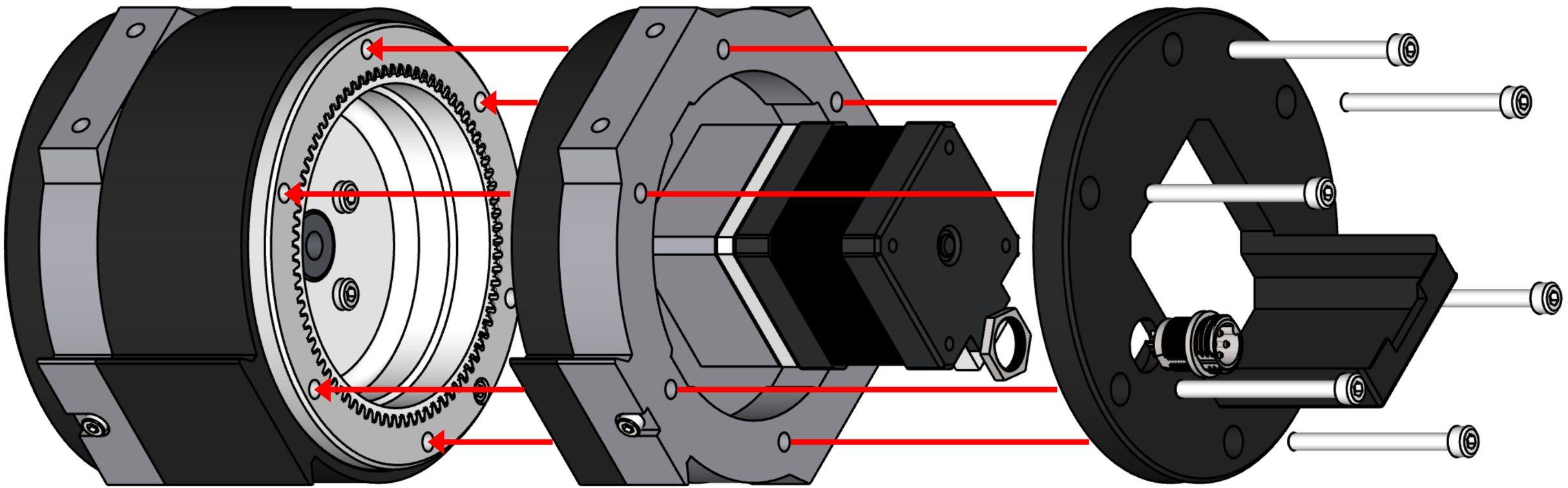
9