BATTERY CONNECTOR AND KILL SWITCH

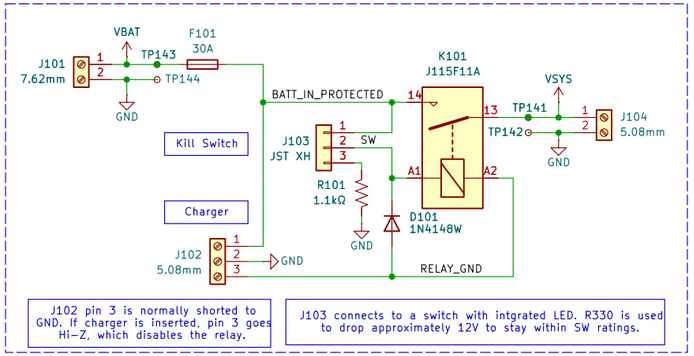

DESIGN NOTES

This system is designed to power and control a ride-on vehicle for children with motor disabilities. The system can be powered from either a 24V or 12V lead-acid or LiFePO$_4$ battery. A digital kill switch (K101) is used to power the vehicle on/off.

This system is intended to drive either two sets of two parallel motors for the front and rwear wheels respsectively. A 5th motor is used for steering, and steering feedback is provided by an analog sensor that measures the angle of the steering mechanism.

The system also can create audio outputs using an onboard DAC and 20W power amplifier.

To control the vehicle, this syustem offers a standardized control interface that utilizes the RJ45 connector. PWM signals are used to indicate steering and throttle. In addition, an RC module can be plugged into the board allowing remote operation. When the RC interface is active, the hardwired control system is locked out allowing the parent to override the child.

The board also includes interfaces for a UI device (M5stack dial) and action challenges.

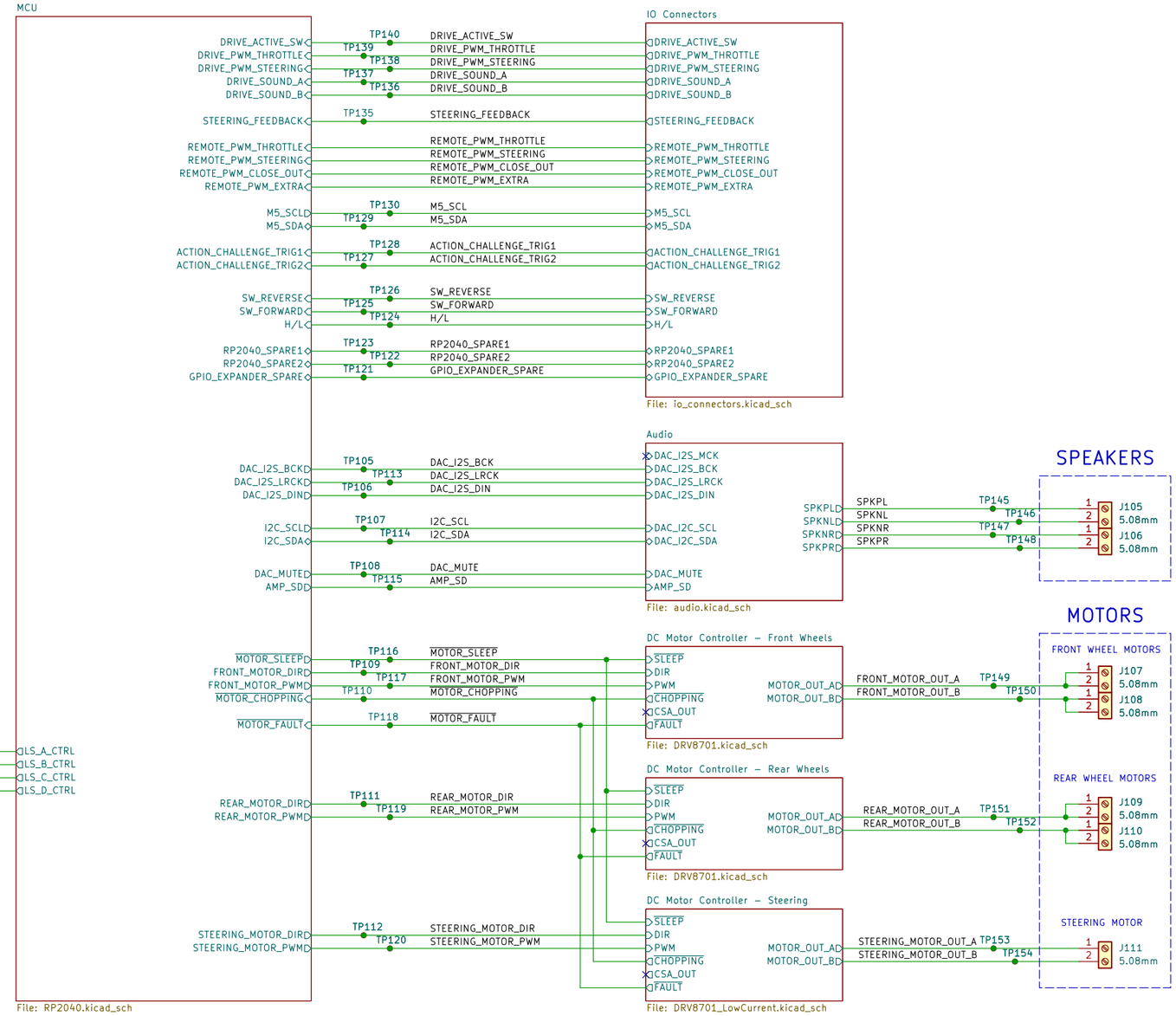

MOUNTING HOLES

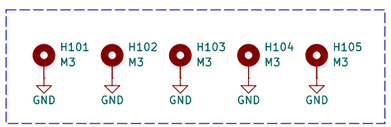

FIDUCIALS

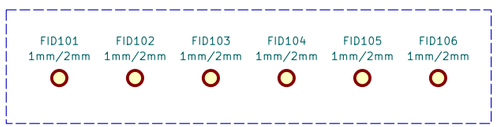

Geeks for Kids
Learn Science and Math Club

Sheet: /
File: geeks-ecu.kicad_sch

Title: Electronic Control Unit (ECU)

Size: USLedger	Date: 2025-11-19	Rev: V1
KiCad E.D.A. 10.0.1		Id: 1/9

BUCK-BOOST CONVERTER

IC Notes:

The LM5176 is a synchronous four-switch buck-boost DC/DC controller capable of regulating the output voltage at, above, or below the input voltage.

- Input Voltage Range: 4.2 V to 55 V
- Output Voltage Range: 0.8 V to 55 V
- VOUT short protection
- High efficiency buck-boost transition
- Adjustable switching frequency
- Optional frequency sync and dithering
- Integrated 2-A MOSFET gate drivers
- Cycle-by-cycle current limit and optional hiccup
- Optional input or output average current limiting
- Programmable input UVLO and soft start
- Power Good and output overvoltage protection

LM5176 Datasheet

DESIGN NOTES

Input Voltage Range: 7-30V
Output Voltage: 12V
Output Current: 0-6A

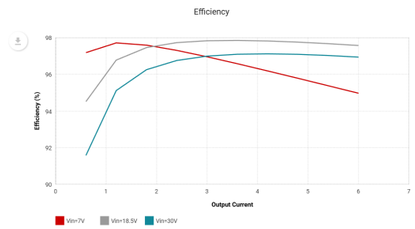

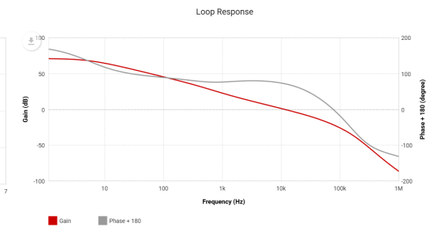

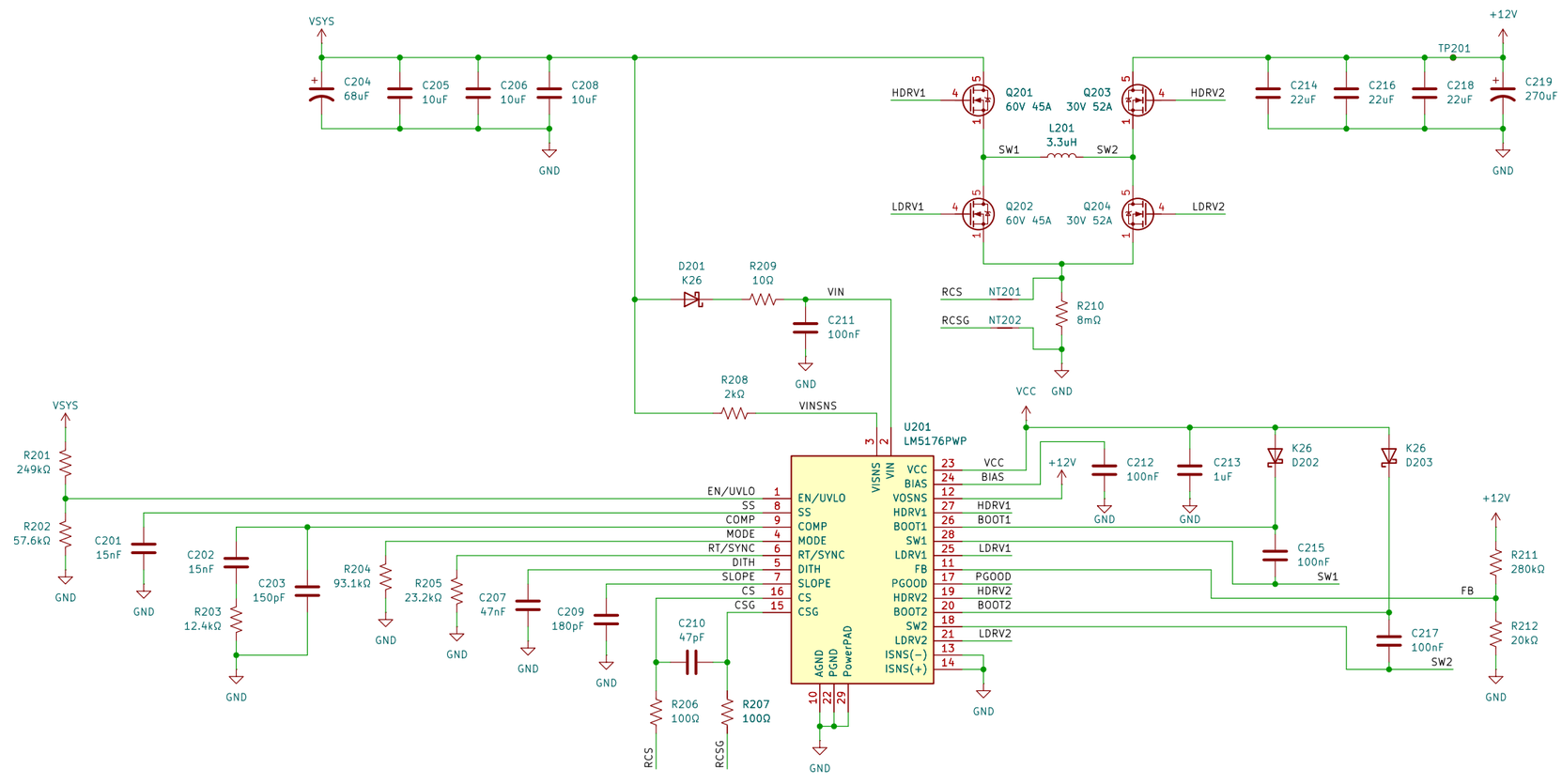

OUTPUT CONNECTORS

For 2x LED strips, 2x spare

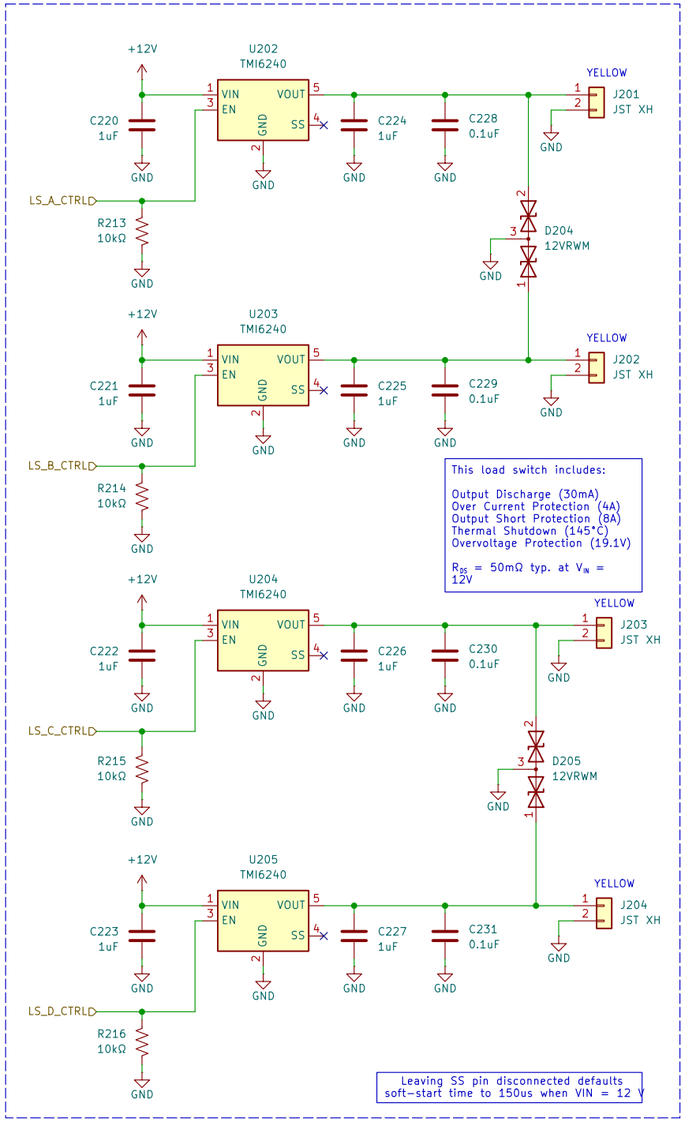

This load switch includes:

Output Discharge (30mA)
Over Current Protection (4A)
Output Short Protection (8A)
Thermal Shutdown (145°C)
Overvoltage Protection (19.1V)

R_{DS} = 50mΩ typ. at V_{IN} = 12V

Leaving SS pin disconnected defaults soft-start time to 150us when VIN = 12 V

Geeks for Kids
Learn Science and Math Club
Sheet: /12V Buck-Boost Converter/
File: LM5176.kicad_sch

Title: Electronic Control Unit (ECU)

Size: USLedger	Date: 2025-11-19	**Rev: V1**
KiCad E.D.A. 10.0.1		Id: 2/9

5V BUCK CONVERTER

The LMR51450 is a wide-VIN, easy-to-use synchronous buck converter capable of driving up to 5-A load current. With a wide input range of 4 V to 36 V, the device is suitable for a wide range of industrial applications for power conditioning from an unregulated source.

The LMR51450 features adjustable switching frequency from 200 kHz to 1.1 MHz with an external resistor, which provides the flexibility to optimize either efficiency or external component size. The device has PFM version to realize high efficiency at light load and FPWM version to achieve constant frequency, and small output voltage ripple over the full load range. Soft-start and compensation circuits are implemented internally which allows the device to be used with minimum external components.

The device has built-in protection features, such as cycle-by-cycle current limit, hiccup mode short-circuit protection, and thermal shutdown in case of excessive power dissipation. The LMR51450 is available in WSON-12 package.

LMR51450 Datasheet

DESIGN NOTES

VIN_MAX = 36V
I_OUT = 5A
f_SW = 500kHz
Asume K_IND = 0.4

$$\Delta i_L = \frac{V_{OUT} \times (V_{IN_MAX} - V_{OUT})}{V_{IN_MAX} \times L \times f_{SW}}$$

$$L_{MIN} = \frac{V_{IN_MAX} - V_{OUT}}{I_{OUT} \times K_{IND}} \times \frac{V_{OUT}}{V_{IN_MAX} \times f_{SW}}$$

For VOUT = 3.3V, L_MIN = 3uH. Choose L = 3.3uH.
For VOUT = 5.0V, L_MIN = 4.3uH. Choose L = 4.7uH
For VOUT = 12.0V, L_MIN = 8uH Choose L = 10uH.

Following reccomended values for components:
C_IN = 2x10uF + 1x0.1uF
C_OUT = 2x47uF (derates as VOUT increases)
C_FF = 33pF
R_FF = 1kΩ
C_BOOT = 0.1uF

Leaving RT open defaults f_SW = 500kHz.
Since UVLO is not required, EN pin is tied to VIN.

TI also reccomends a 47uF or 100uF electrolytic cap on VIN to prevent false UVLO triggering.

LAYOUT GUIDELINES

Layout is a critical portion of good power supply design. The following guidelines help users design a PCB with the best power conversion performance, thermal performance, and minimized generation of unwanted EMI.

1. The input bypass capacitor CIN must be placed as close as possible to the VIN and PGND pins. Grounding for both the input and output capacitors must consist of localized top side planes that connect to the PGND pin.

2. Minimize trace length to the FB pin net. Both feedback resistors, RFBT and RFBB, must be located close to the FB pin. If VOUT accuracy at the load is important, make sure VOUT sense is made at the load. Route VOUT sense path away from noisy nodes and preferably through a layer on the other side of a shielded layer.

3. Use ground plane in one of the middle layers as noise shielding and heat dissipation path if possible.

4. Make VIN, VOUT, and ground bus connections as wide as possible. This reduces any voltage drops on the input or output paths of the converter and maximizes efficiency.

5. Provide adequate device heat-sinking. Use an array of heat-sinking vias to connect the top side ground plane to the ground plane on the bottom PCB layer. If the PCB has multiple copper layers, these thermal vias can also be connected to inner layer heat-spreading ground planes. Make sure enough copper area is used for heat-sinking to keep the junction temperature below 150°C.

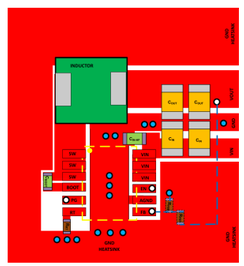

5V 5A Power Supply

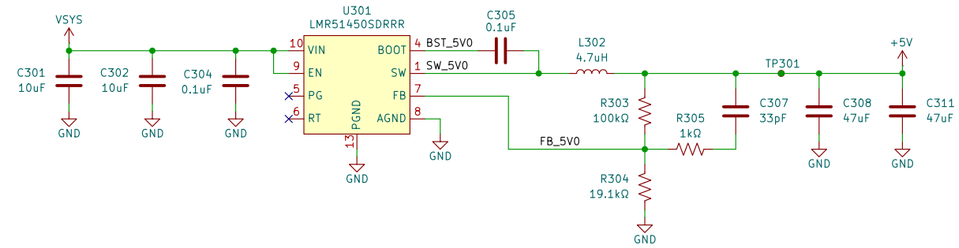

3.3V 3A Power Supply

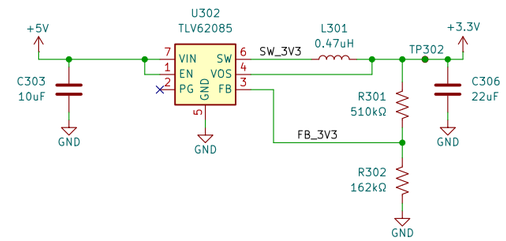

OUTPUT CONNECTORS

1x spare for each voltage rail

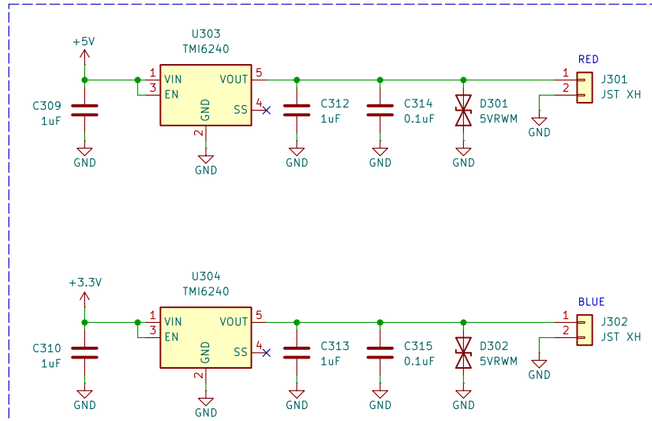

3.3V BUCK CONVERTER

IC Notes:

The TLV62085 device is a high-frequency synchronous step-down converter optimized for small solution size and high efficiency.

- DCS-Control Topology
- Up to 95% Efficiency
- 17µA Operating Quiescent Current
- 31mΩ and 23mΩ Power MOSFET Switch
- 2.5V to 6.0V Input Voltage Range
- 0.8-V to VIN Adjustable Output Voltage
- Power Save Mode for Light Load Efficiency
- 100% Duty Cycle for Lowest Dropout
- Hiccup Short-Circuit Protection
- Output Discharge
- Power Good Output
- Thermal Shutdown Protection
- Available in 2mm×2mm VSON Package

TLV62085 Datasheet

DESIGN NOTES

Input Voltage Range: 4-6V
Output Voltage: 3.3V
Output Current: 0-3A

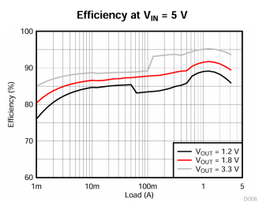

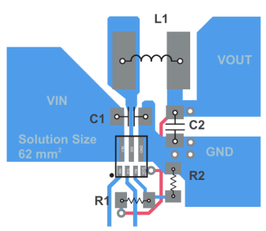

Figure 23. PCB Layout Recommendation

Geeks for Kids
Learn Science and Math Club
Sheet: /Low Voltage Power Converters/
File: power_converters.kicad_sch

Title: Electronic Control Unit (ECU)

Size: USLedger	Date: 2025-11-19	**Rev: V1**
KiCad E.D.A. 10.0.1		Id: 3/9

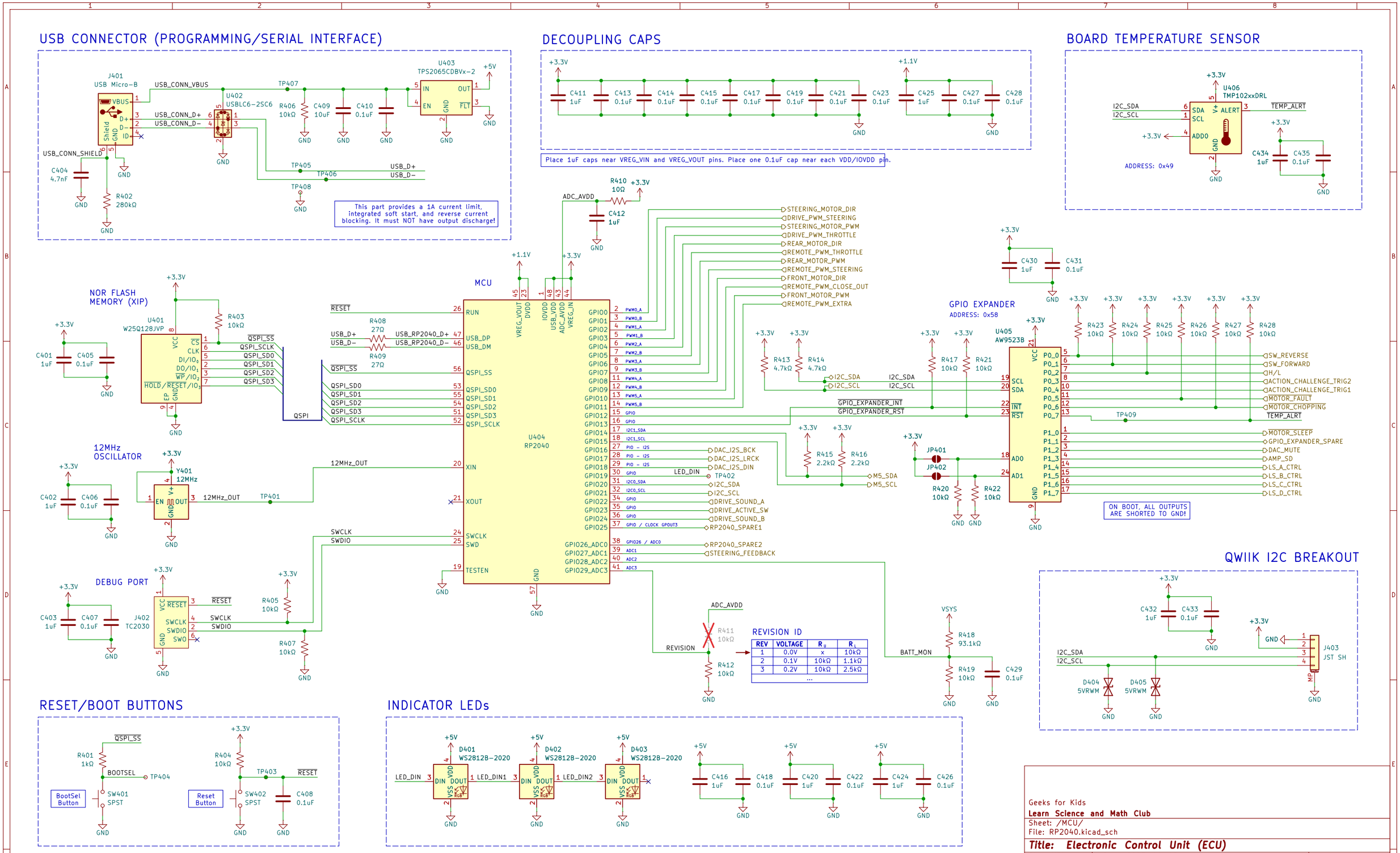
USB CONNECTOR (PROGRAMMING/SERIAL INTERFACE)
J401
USB Micro-B
U402
USBLC6-2SC6
U403
TPS2065CDBVx-2
This part provides a 1A current limit, integrated soft start, and reverse current blocking. It must NOT have output discharge!
DECOUPLING CAPS
Place 1uF caps near VREG_VIN and VREG_VOUT pins. Place one 0.1uF cap near each VDD/IOVDD pin.
BOARD TEMPERATURE SENSOR
U406
TMP102xxDRL
ADDRESS: 0x49
NOR FLASH MEMORY (XIP)
U401
W25Q128JVP
MCU
U404
RP2040
12MHz OSCILLATOR
Y401
12MHz
DEBUG PORT
J402
TC2030
GPIO EXPANDER
ADDRESS: 0x58
U405
AW9523B
ON BOOT, ALL OUTPUTS ARE SHORTED TO GND!
REVISION ID
QWIIK I2C BREAKOUT
J403
JST SH
RESET/BOOT BUTTONS
BootSel Button
Reset Button
INDICATOR LEDs
D401
WS2812B-2020
D402
WS2812B-2020
D403
WS2812B-2020
Geeks for Kids
Learn Science and Math Club
Sheet: /MCU/
File: RP2040.kicad_sch
Title: Electronic Control Unit (ECU)
Size: USLedger
Date: 2025-11-19
Rev: V1
KiCad E.D.A. 10.0.1
Id: 4/9

ACTION CHALLENGE INTERFACES

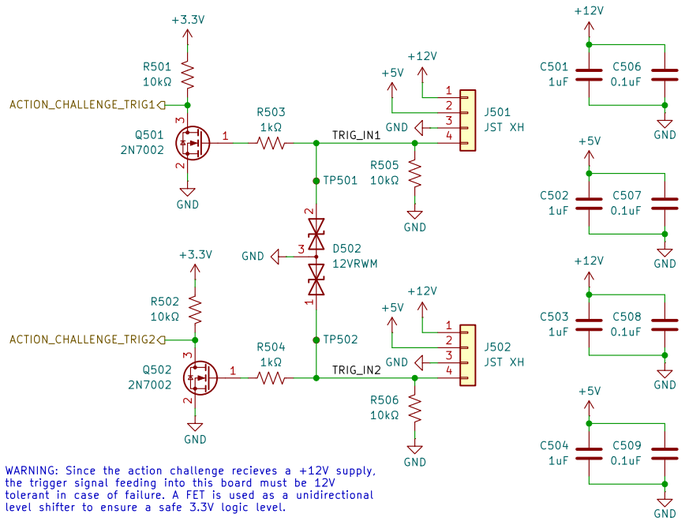

WARNING: Since the action challenge recieves a +12V supply, the trigger signal feeding into this board must be 12V tolerant in case of failure. A FET is used as a unidirectional level shifter to ensure a safe 3.3V logic level.

M5 DIAL INTERFACE

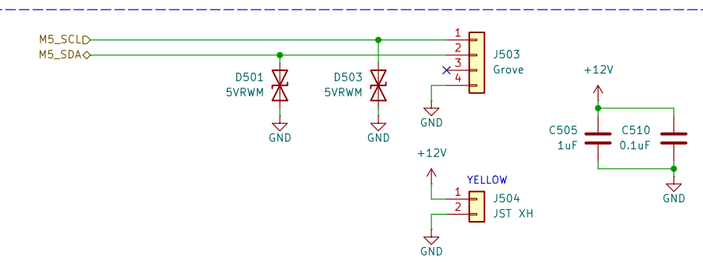

DRIVE SYSTEM CONNECTOR

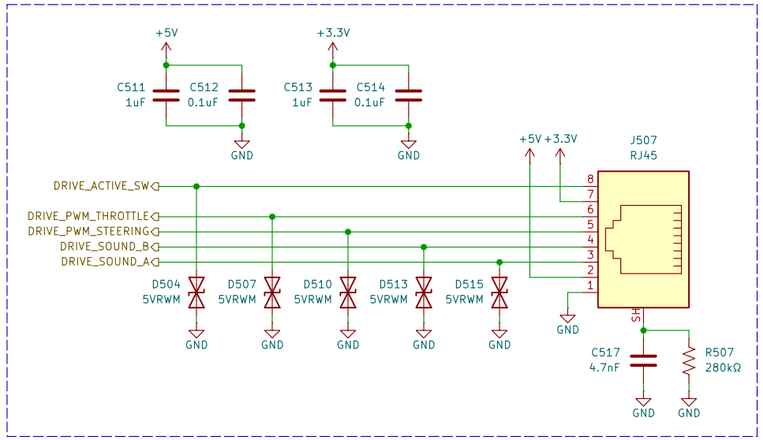

RC CONNECTOR

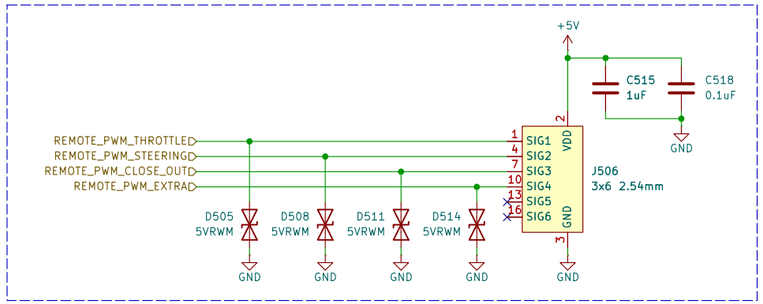

DASHBOARD CONNECTOR

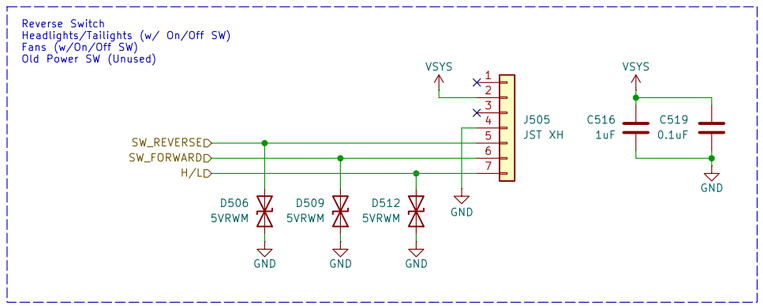

STEERING FEEDBACK CONNECTOR

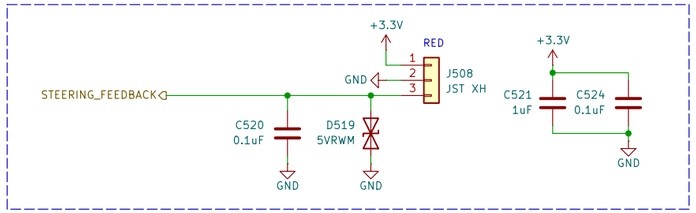

SPARE GPIO CONNECTOR

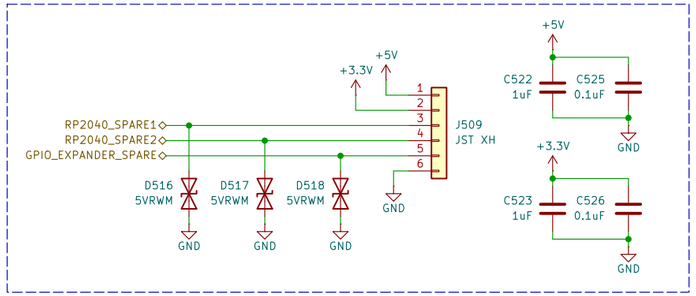

Geeks for Kids

Learn Science and Math Club

Sheet: /IO Connectors/

File: io_connectors.kicad_sch

Title: Electronic Control Unit (ECU)

Size: USLedger	Date: 2025-11-19	**Rev: V1**
KiCad E.D.A. 10.0.1		Id: 5/9

DC MOTOR CONTROLLER

IC Notes:

The DRV8701 is a single H-bridge gate driver that uses four external N-channel MOSFETs targeted to drive a 12-V to 24-V bidirectional brushed DC motor.

VBAT Voltage Range: 6V to 45V (abs. max)
Motor Drive Current: up to 35 A continuous
Inputs compatible with 1.8, 3.3, and 5 V logic
PWM operation up to 100 kHz
CSA output prop. to motor current (20 mV/A)
Active current chopping at 50 A
Undervoltage shutdown
Short circuit protection

DRV8701 Datasheet

SP60N13NK Datasheet

Bulk Capacitor Sizing for DC Motor Drivers

DESIGN NOTES

FET: SP60N13NK (Qgd = 7.6 nC typ.)

FET Gate Rise Time $t_R = Q_{gd}/I_{DRIVE}$

To achieve 100ns < t_R < 300ns,
25mA < I_{DRIVE} < 76mA.

Connecting a 200kΩ resistor from IDRIVE pin to GND yields I_{DRIVE} = 25mA.

Choosing R_{SENSE} = 8mOhm

$I_{CHOP} = (V_{REF} - V_{OFFSET})/(A_V * R_{SENSE})$

For I_{CHOP} = 12A,
V_{REF} must be set to 1.97V.
Use R_U = 4.7k, R_D = 3.3k (1.98V typ.)

$V_{CSA_OUT} = R_{SENSE} * A_V * I + V_{OFFSET}$
$V_{CSA_OUT} = 0.16 * I + 0.05$

Note: $f_{PWM} < I_{VCP} / 2 * Q_{GD}$.
Do not allow f_{PWM} to exceed 400kHz!

DRV8701P (PWM) CONTROL INTERFACE

SLEEP	IN1	IN2	Description
0	X	X	Sleep; H-Bridge Disabled, High-Z
1	0	0	Coast; H-Bridge Disabled, High-Z
1	0	1	Reverse; Current SH2 -> SH1
1	1	0	Forward; Current SH1 -> SH2
1	1	1	Brake; Low-Side Slow Decay

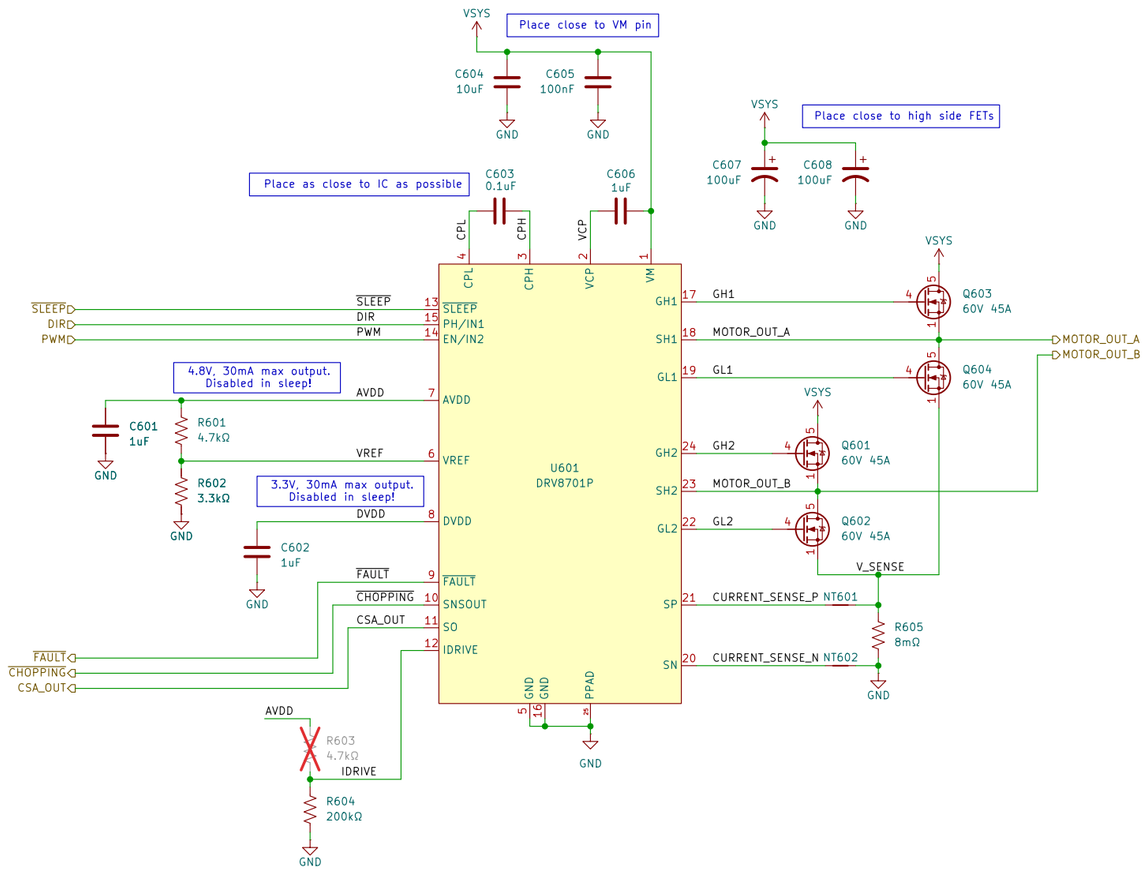

Geeks for Kids
Learn Science and Math Club
Sheet: /DC Motor Controller - Front Wheels/
File: DRV8701.kicad_sch

Title: Electronic Control Unit (ECU)

Size: USLedger | Date: 2025-11-19 | **Rev: V1**
KiCad E.D.A. 10.0.1 | Id: 6/9

DC MOTOR CONTROLLER

IC Notes:

The DRV8701 is a single H-bridge gate driver that uses four external N-channel MOSFETs targeted to drive a 12-V to 24-V bidirectional brushed DC motor.

VBAT Voltage Range: 6V to 45V (abs. max)
Motor Drive Current: up to 35 A continuous
Inputs compatible with 1.8, 3.3, and 5 V logic
PWM operation up to 100 kHz
CSA output prop. to motor current (20 mV/A)
Active current chopping at 50 A
Undervoltage shutdown
Short circuit protection

DRV8701 Datasheet

SP60N13NK Datasheet

Bulk Capacitor Sizing for DC Motor Drivers

DESIGN NOTES

FET: SP60N13NK (Qgd = 7.6 nC typ.)

FET Gate Rise Time $t_R = Q_{gd}/I_{DRIVE}$

To achieve 100ns < t_R < 300ns,
25mA < I_{DRIVE} < 76mA.

Connecting a 200kΩ resistor from IDRIVE pin to GND yields I_{DRIVE} = 25mA.

Choosing R_{SENSE} = 8mOhm

$I_{CHOP} = (V_{REF} - V_{OFFSET})/(A_V * R_{SENSE})$

For I_{CHOP} = 12A,
V_{REF} must be set to 1.97V.
Use R_U = 4.7k, R_D = 3.3k (1.98V typ.)

$V_{CSA_OUT} = R_{SENSE} * A_V * I + V_{OFFSET}$
$V_{CSA_OUT} = 0.16 * I + 0.05$

Note: $f_{PWM} < I_{VCP} / 2 * Q_{GD}$.
Do not allow f_{PWM} to exceed 400kHz!

DRV8701P (PWM) CONTROL INTERFACE

SLEEP	IN1	IN2	Description
0	X	X	Sleep; H-Bridge Disabled, High-Z
1	0	0	Coast; H-Bridge Disabled, High-Z
1	0	1	Reverse; Current SH2 -> SH1
1	1	0	Forward; Current SH1 -> SH2
1	1	1	Brake; Low-Side Slow Decay

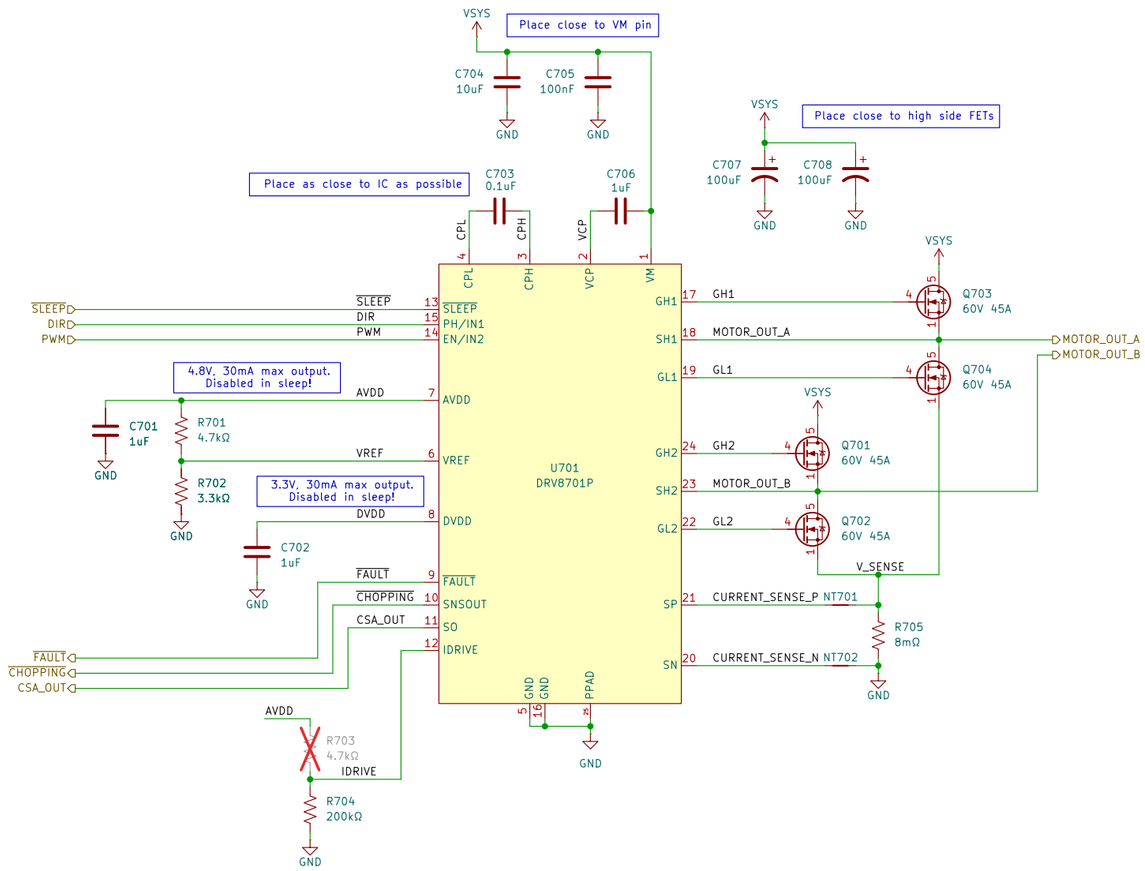

Geeks for Kids
Learn Science and Math Club
Sheet: /DC Motor Controller - Rear Wheels/
File: DRV8701.kicad_sch

Title: Electronic Control Unit (ECU)

Size: USLedger | Date: 2025-11-19 | **Rev: V1**
KiCad E.D.A. 10.0.1 | Id: 7/9

DC MOTOR CONTROLLER

IC Notes:

The DRV8701 is a single H-bridge gate driver that uses four external N-channel MOSFETs targeted to drive a 12-V to 24-V bidirectional brushed DC motor.

VBAT Voltage Range: 6V to 45V (abs. max)
Motor Drive Current: up to 35 A continuous
Inputs compatible with 1.8, 3.3, and 5 V logic
PWM operation up to 100 kHz
CSA output prop. to motor current (20 mV/A)
Active current chopping at 50 A
Undervoltage shutdown
Short circuit protection

DRV8701 Datasheet

SP60N13NK Datasheet

Bulk Capacitor Sizing for DC Motor Drivers

DESIGN NOTES

FET: SP60N13NK (Qgd = 7.6 nC typ.)

FET Gate Rise Time $t_R = Q_{gd}/I_{DRIVE}$

To achieve 100ns < t_R < 300ns,
25mA < I_{DRIVE} < 76mA.

Connecting a 200kΩ resistor from IDRIVE pin to GND yields I_{DRIVE} = 25mA.

Choosing R_{SENSE} = 8mOhm

$I_{CHOP} = (V_{REF} - V_{OFFSET})/(A_V * R_{SENSE})$

For I_{CHOP} = 5A,
V_{REF} must be set to 0.85V.
Use R_U = 4.7k, R_D = 1k (0.84V typ.)

$V_{CSA_OUT} = R_{SENSE} * A_V * I + V_{OFFSET}$
$V_{CSA_OUT} = 0.16 * I + 0.05$

Note: $f_{PWM} < I_{VCP} / 2 * Q_{GD}$.
Do not allow f_{PWM} to exceed 400kHz!

DRV8701P (PWM) CONTROL INTERFACE

SLEEP	IN1	IN2	Description
0	X	X	Sleep; H-Bridge Disabled, High-Z
1	0	0	Coast; H-Bridge Disabled, High-Z
1	0	1	Reverse; Current SH2 -> SH1
1	1	0	Forward; Current SH1 -> SH2
1	1	1	Brake; Low-Side Slow Decay

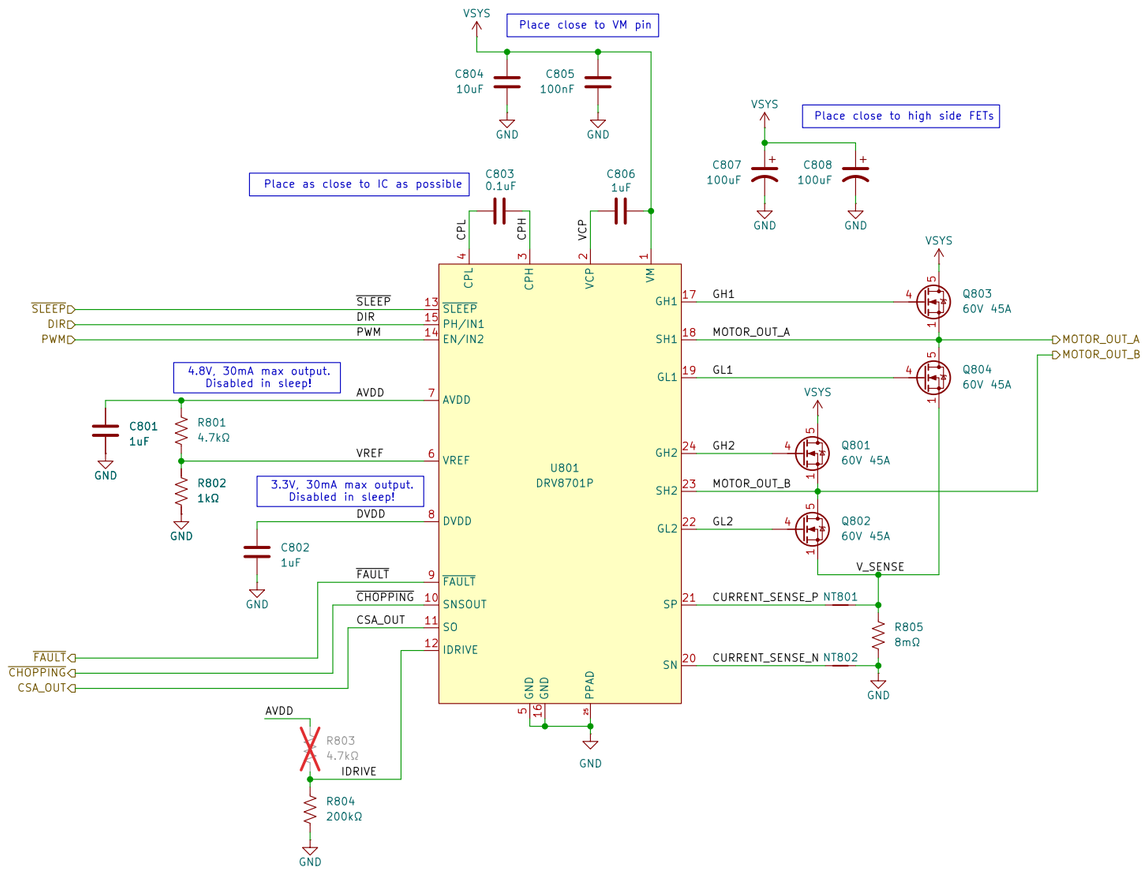

Geeks for Kids
Learn Science and Math Club
Sheet: /DC Motor Controller - Steering/
File: DRV8701_LowCurrent.kicad_sch

Title: Electronic Control Unit (ECU)

Size: USLedger	Date: 2025-11-19	**Rev: V1**
KiCad E.D.A. 10.0.1		Id: 8/9

AUDIO DAC

IC Notes:

The PCM512x is a high-performance stereo digital-to-analog converter (DAC) from Texas Instruments. Key features include:

High-Quality Audio: Up to 32-bit/384kHz audio processing
Flexible I/O: I2S, TDM, and other digital audio formats
Built-in DSP: Digital signal processing capabilities
Multiple Clock Sources: PLL, SCK, BCK options
Volume Control: Digital volume control with 0.5dB steps
GPIO Outputs: Configurable GPIO pins for status and clock outputs
Low Power: Multiple power-saving modes

PCM512x Datasheet

Arduino Library for PCM51XX

DAC AVDD POWER SUPPLY

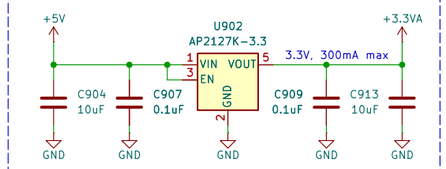

DAC AVDD is run off of its own linear supply to minimize noise.

AUDIO AMPLIFIER

IC Notes:

The TPA3110D2 is a 15-W (per channel) efficient, Class-D audio power amplifier for driving bridged-tied stereo speakers.

VBATT Voltage Range: 8 V to 26 V
90% Efficient Class-D Amp Eliminates Need for Heat Sinks
Filter-Free Operation
Adjustable Power Limiter
Speaker DC Current Protection
Robust Pin-to-Pin Short Circuit Protection and Thermal Protection
Excellent THD+N / Pop-Free Performance
Four Selectable, Fixed Gain Settings
Differential Inputs
Digital Inputs compatible with TTL logic

TPA3110D2 Datasheet

AMPLIFIER GAIN CONFIGURATION

GAIN0	GAIN1	Amplifier Gain	Input Impedance
0	0	20 dB	60 kOhm
0	1	26 dB	30 kOhm
1	0	32 dB	15 kOhm
1	1	36 dB	9 kOhm

Note: Gain and input impedance have +/-20% tolerance

Use gain table to determine Z_I, assume f_c = 20 Hz.

$C_I = 1 / (2*pi*Z_I*f_c) = 0.13uF$

Choosing C_I = 0.1uF, closest standard value

AMPLIFIER OUTPUT POWER LIMITING

The PLIMIT circuit sets a limit on the output peak-to-peak voltage. This limit is 4 times the voltage at the PLIMIT pin. This output voltage can be used to calculate the maximum output power for a given maximum input voltage and speaker impedance.

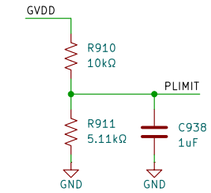

$P_{OUT} = (V_p*R_L/(R_L+2*R_S))^2/2*R_L$

For 10W@4Ω, V_p = 8.94 not considering R_S.
Thus, PLIMIT should be around 2.25V - 2.50V.
Given GVDD = 7V, the 1/3 divider selected yields 2.37V.

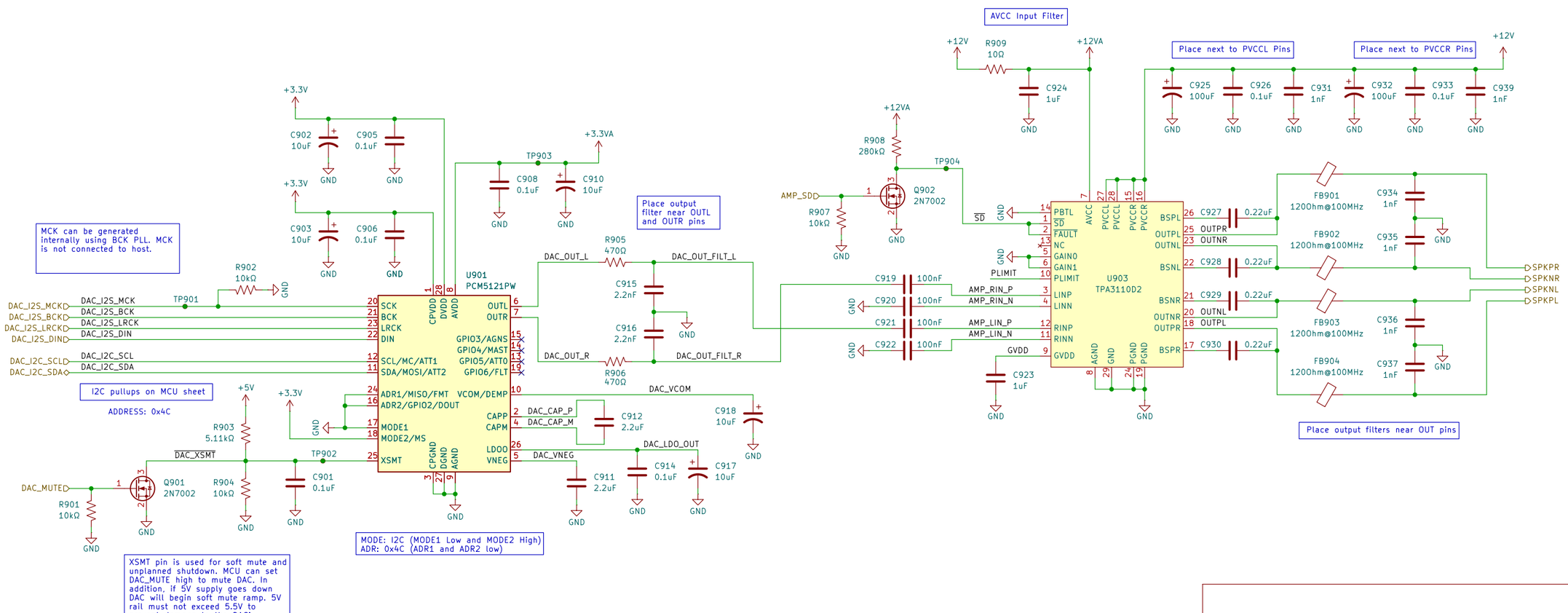

Geeks for Kids
Learn Science and Math Club
Sheet: /Audio/
File: audio.kicad_sch

Title: Electronic Control Unit (ECU)

Size: USLedger | Date: 2025-11-19 | **Rev: V1**
KiCad E.D.A. 10.0.1 | Id: 9/9