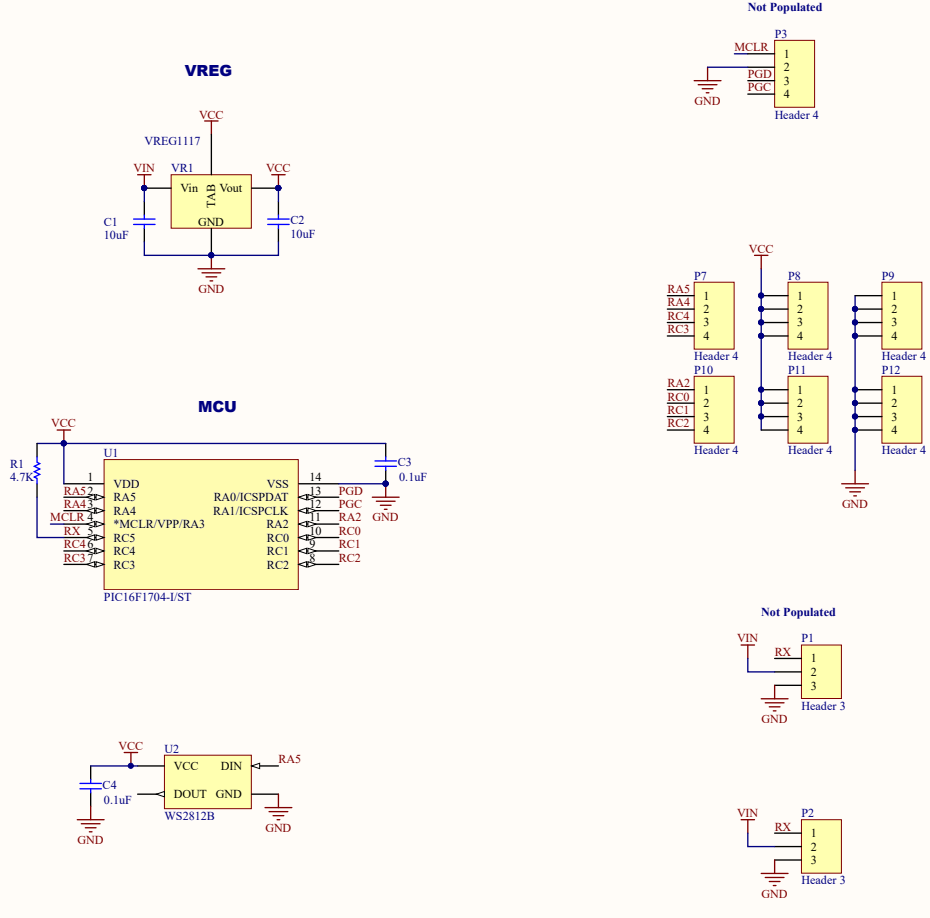

Neopixel Blaster

Size: B	Drawn By: Jeremie Boulianne	Revision: 0	
Date: 5/2/2019	Time: 2:01:10 PM		

Property of:
Synthiam Inc.
Unit 10, 6120 - 11 St. SE
Calgary, AB
T2H 2L7
Canada

SYNTHIAM

Copyright © 2019 Synthiam Inc. All rights reserved.