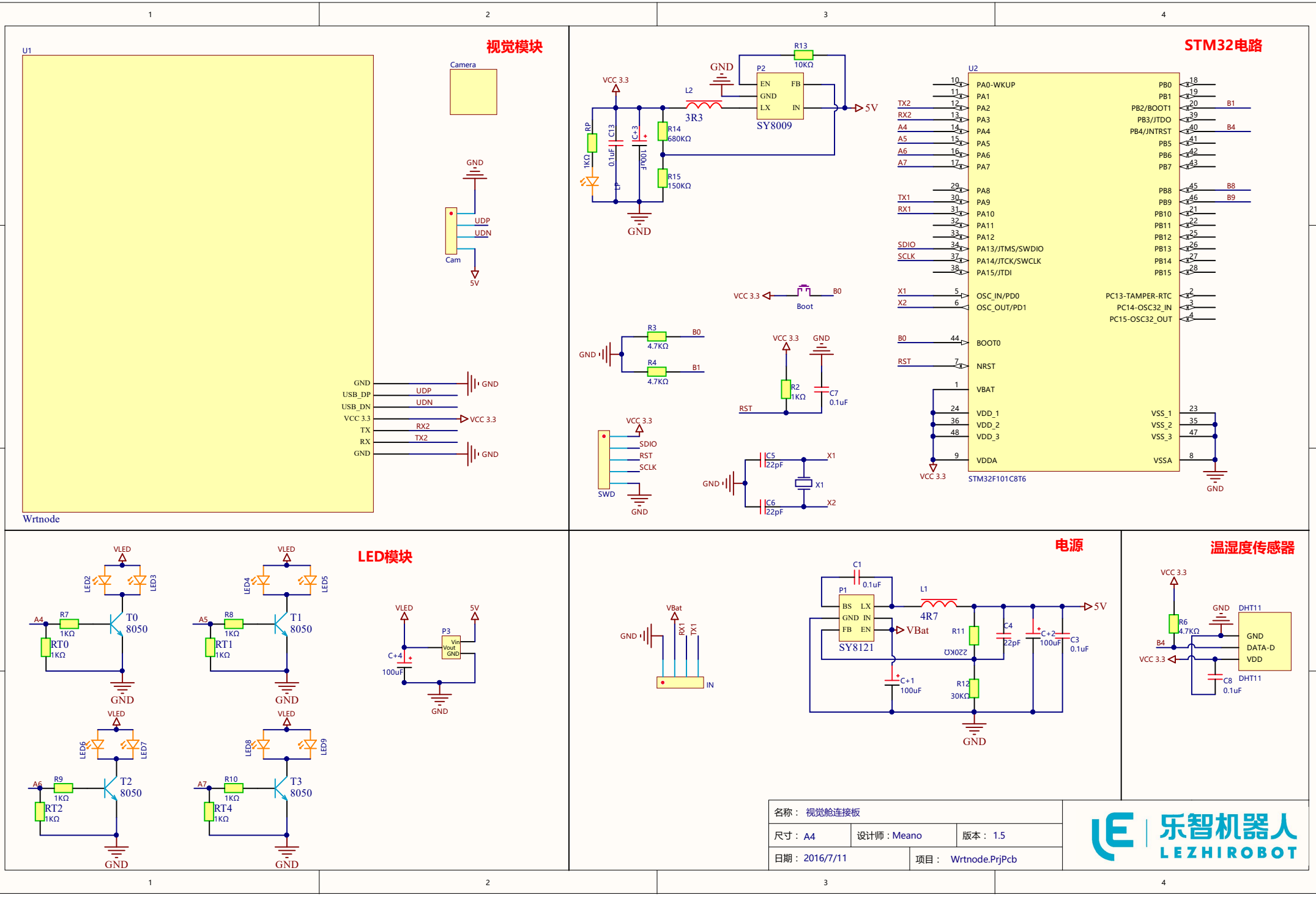
视觉模块
U1
Camera
GND
UDP
UDN
Cam
5V
GND
USB_DP
USB_DN
VCC 3.3
TX
RX
GND
UDP
UDN
VCC 3.3
RX2
TX2
GND
Wrtnode
STM32电路
U2
PA0-WKUP
PA1
PA2
PA3
PA4
PA5
PA6
PA7
PA8
PA9
PA10
PA11
PA12
PA13/JTMS/SWDIO
PA14/JTCK/SWCLK
PA15/JTDI
PB0
PB1
PB2/BOOT1
PB3/JTDO
PB4/JNTRST
PB5
PB6
PB7
PB8
PB9
PB10
PB11
PB12
PB13
PB14
PB15
OSC_IN/PD0
OSC_OUT/PD1
PC13-TAMPER-RTC
PC14-OSC32_IN
PC15-OSC32_OUT
BOOT0
NRST
VBAT
VDD_1
VDD_2
VDD_3
VDDA
VSS_1
VSS_2
VSS_3
VSSA
STM32F101C8T6
R13
10KΩ
P2
EN
GND
LX
FB
IN
SY8009
L2
3R3
5V
R14
680KΩ
R15
150KΩ
RP
1KΩ
C13
0.1uF
C+3
100uF
LP
Boot
R3
4.7KΩ
R4
4.7KΩ
R2
1KΩ
C7
0.1uF
RST
SDIO
SCLK
SWD
C5
22pF
C6
22pF
X1
X2
LED模块
VLED
LED2
LED3
LED4
LED5
LED6
LED7
LED8
LED9
R7
R8
R9
R10
T0
8050
T1
8050
T2
8050
T3
8050
RT0
RT1
RT2
RT4
1KΩ
A4
A5
A6
A7
P3
Vin
Vout
GND
C+4
100uF
电源
VBat
RX1
TX1
IN
C1
0.1uF
P1
BS
GND
FB
LX
IN
EN
SY8121
L1
4R7
R11
220KΩ
R12
30KΩ
C4
22pF
C+2
100uF
C3
0.1uF
C+1
100uF
温湿度传感器
DHT11
R6
4.7KΩ
B4
C8
0.1uF
DATA-D
VDD
名称： 视觉舱连接板
尺寸： A4
设计师：Meano
版本： 1.5
日期： 2016/7/11
项目： Wrtnode.PrjPcb
乐智机器人
LEZHIROBOT

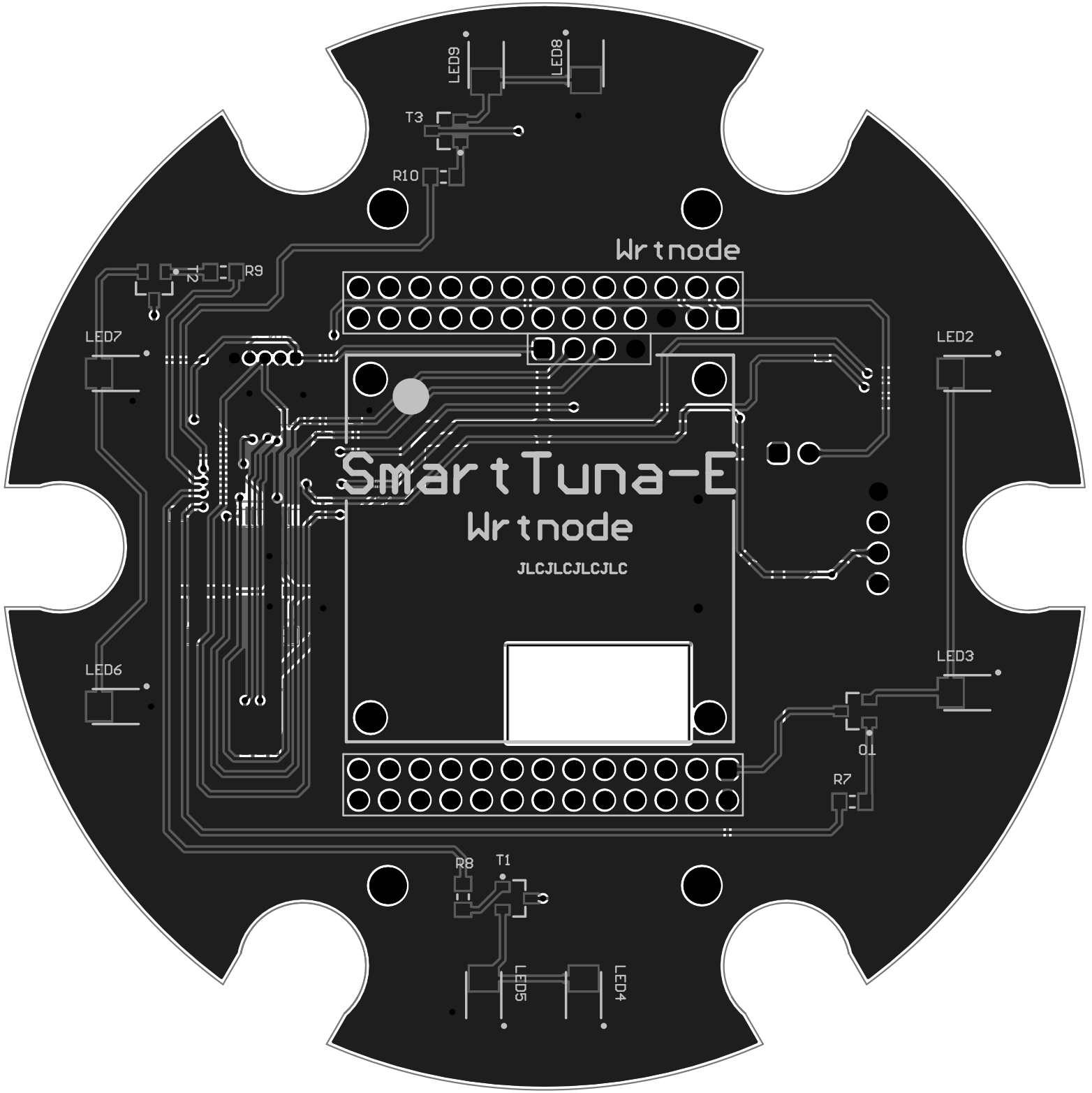
LED9
LED8
T3
R10
Wrtnode
T2
R9
LED7
LED2
SmartTuna-E
Wrtnode
JLCJLCJLCJLC
LED6
LED3
Q1
R7
R8
T1
LED5
LED4

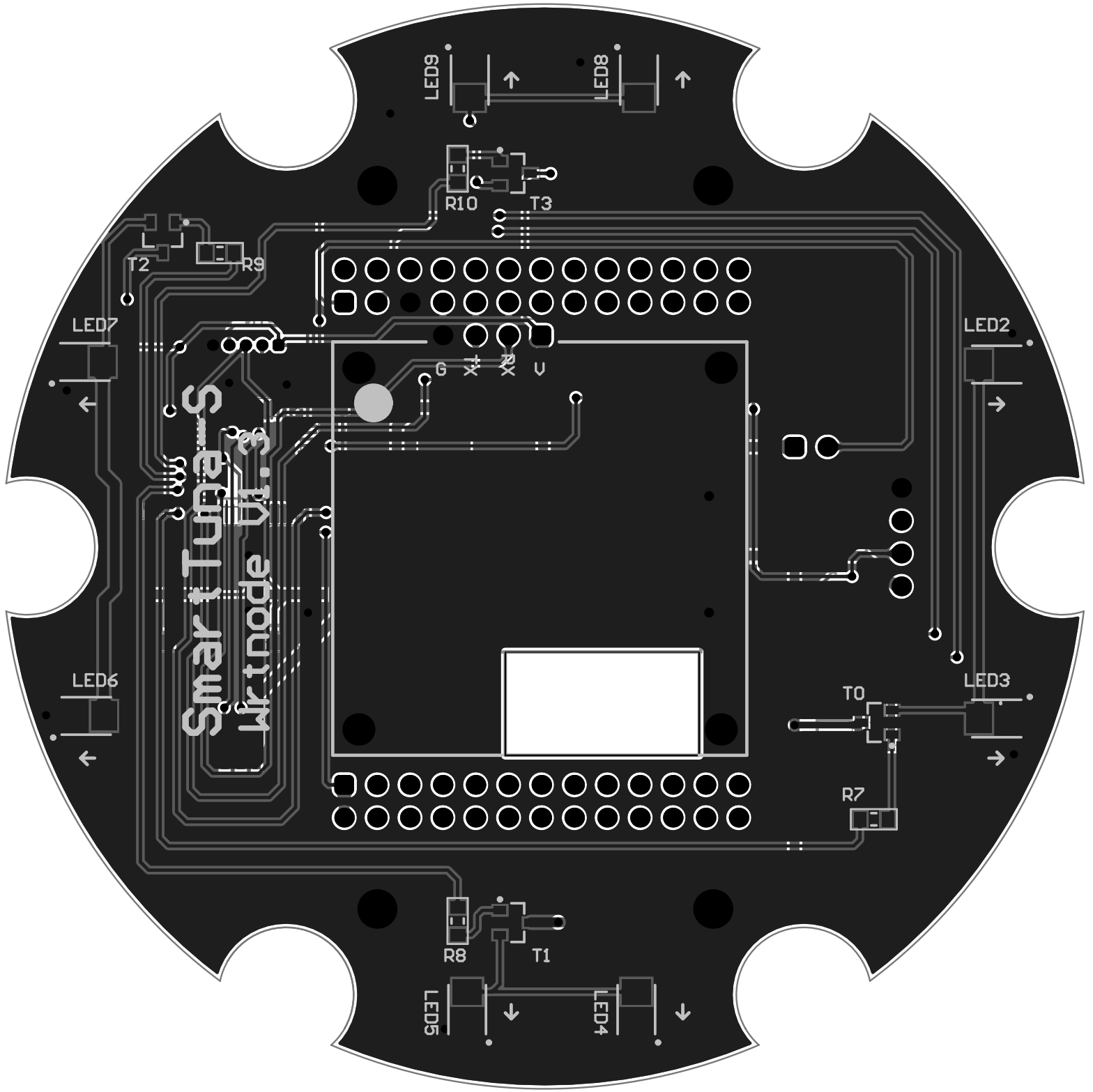
LED9
LED8
R10
T3
T2
R9
LED7
LED2
G
V
Smart Tuna-S
Wrtnode V1.3
LED6
LED3
T0
R7
R8
T1
LED5
LED4

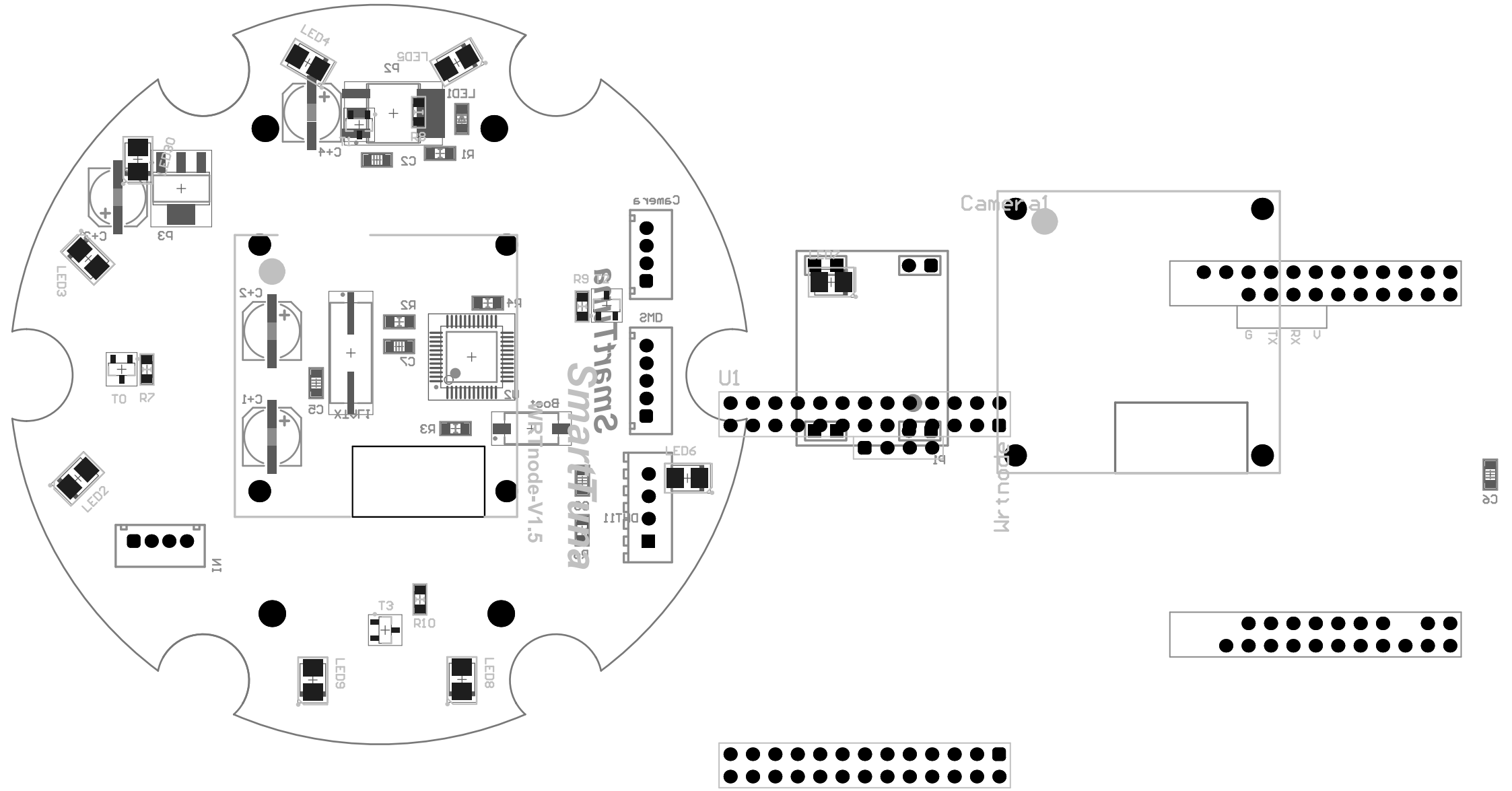

LED4
LED5
P2
LED1
C+4
R1
C2
LED3
P3
C+2
R2
R4
C7
C+1
C5
U2
R3
Boot
R9
Camera
DMS
LED6
DMT11
T0
R7
LED2
N1
T3
R10
LED9
LED8
U1
Camera1
G
TX
RX
V
C6

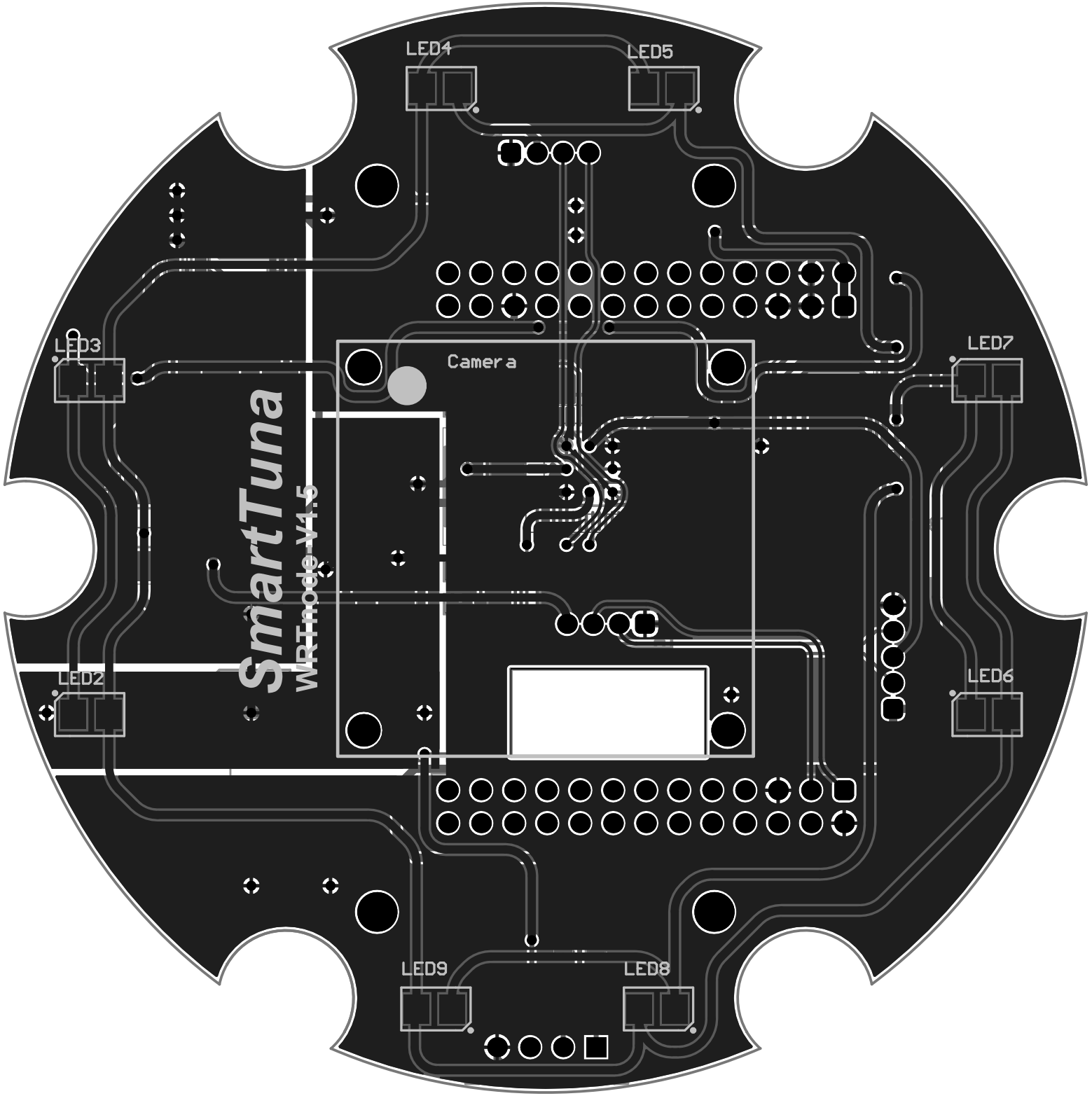
LED4
LED5
LED3
LED7
Camera
SmartTuna
WRTnode V1.5
LED2
LED6
LED9
LED8

Comment	Description	Designator	Footprint	LibRef	Quantity	Value
Key	Key2	Boot	KEY	Key	1	
Cap	Cap Normal	C1, C3, C7, C8, C13	Cap - 0805	Cap	5	0.1uF
Cap	Cap Normal	C4, C5, C6	Cap - 0805	Cap	3	22pF
CapPlus	Cap+	C+1, C+2, C+3, C+4	SMD-EC-F6.3	Cap+	4	100uF
PH2.0-4P	PH2.0-4P	Cam, IN	PH2.0-4P	PH2.0-4P	2	
		Camera	USB camera	USB camera	1	
DHT11		DHT11	DHT11	DHT11	1	
4R7		L1	7*7*4	LH	1	4.7uH
3R3		L2	7*7*4	LH	1	3.3uH
LED Light		LED2, LED3, LED4, LED5, LED6, LED7, LED8, LED9	LED 3528	LED	8	
LED Light		LP	LED - 0805	LED	1	
SY8121		P1	SY8121	SY8121	1	
SY8009		P2	SY8009	SY8009	1	
PowerIC	PowerControl	P3	ASM1117	ASM1117 - 3.3	1	
Res	Res	R2, R7, R8, R9, R10, RP, RT0, RT1, RT2, RT4	Res - 0805	Res	10	1KΩ
Res	Res	R3, R4, R6	Res - 0805	Res	3	4.7KΩ
Res	Res	R11	Res - 0805	Res	1	220KΩ
Res	Res	R12	Res - 0805	Res	1	30KΩ
Res	Res	R13	Res - 0805	Res	1	10KΩ
Res	Res	R14	Res - 0805	Res	1	680KΩ
Res	Res	R15	Res - 0805	Res	1	150KΩ
PH2.0-5P	PH2.0-5P	SWD	PH2.0-5P	PH2.0-5P	1	
8050	9014	T0, T1, T2, T3	9014 SOT23	NPN8050	4	
Wrtnode	Wrtnode	U1	Wrtnode	Wrtnode	1	
STM32F101C8T6	STM32 ARM-based 32-bit MCU with 64 Kbytes Flash, 48-pin LQFP, Industrial Temperature	U2	LQFP48_L	STM32F101C8T6	1	
XTAL	XTAL	X1	XTAL SMD	XTAL	1	