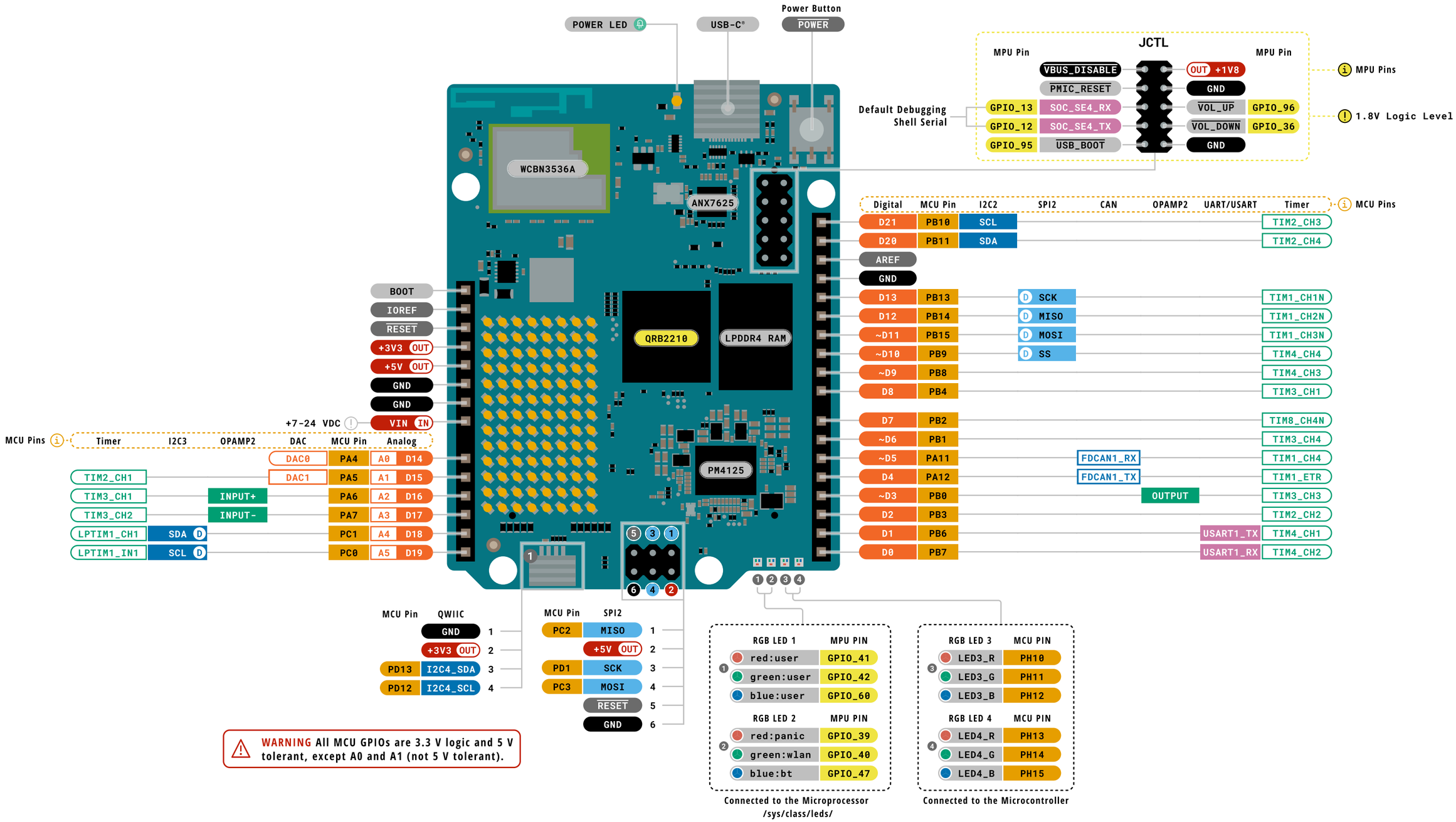


**WARNING** All MCU GPIOs are 3.3 V logic and 5 V tolerant, except A0 and A1 (not 5 V tolerant).

**Legend:**

- Power
- Ground
- IN Power Input
- OUT Power Output
- GPIO Digital External
- Analog External
- Main Part
- Secondary Part
- Internal Component
- Other Pins (Reset, System Control, Debugging)
- I2C
- SPI
- UART/USART
- Other SERIAL
- Analog
- PWM/Timer
- D Default
- D Default
- D Default
- D Default
- LED
- RGB LED

CIPO/COPI have previously been referred to as MISO/MOSI

JSPI and JDIGITAL SPI share the SPI2 MCU peripheral (Can not be used simultaneously as SPI)

**WARNING** A0 and A1 are not 5V tolerant

**WARNING** JCTL pins are 1.8V logic only

ARDUINO UNO Q

SKU code: ABX00162-ABX00173
Full Pinout - Page 1 of 4
Last update: 17 Feb, 2026

DOCS.ARDUINO.CC

This work is licensed under the Creative Commons Attribution-ShareAlike 4.0 International License. To view a copy of this license, visit http://creativecommons.org/licenses/by-sa/4.0/ or send a letter to Creative Commons, PO Box 1866, Mountain View, CA 94042, USA.

WARNING!

# Advanced Section

The following information is for advanced use only and may not be officially supported by Arduino software

# LED Matrix 8x13

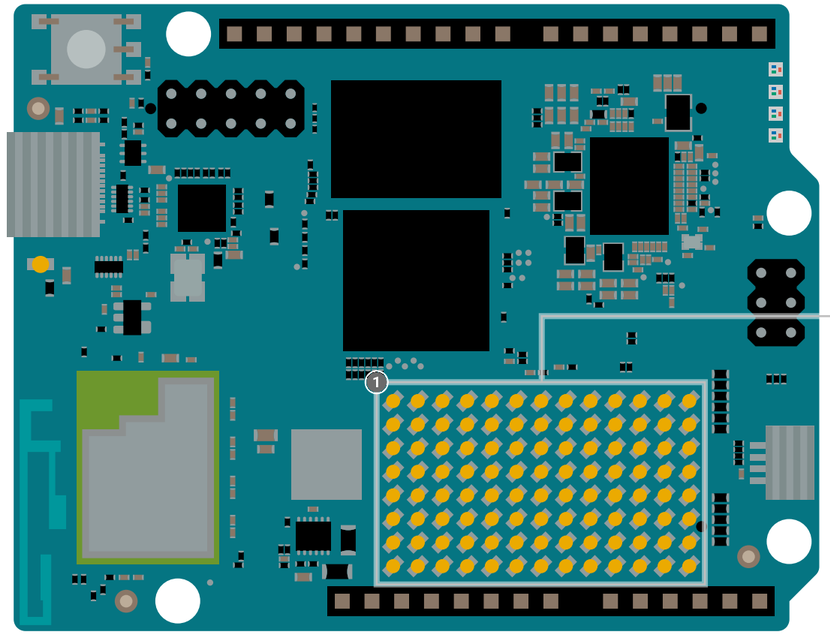

| | | | | | | | | | | | | |
|---|---|---|---|---|---|---|---|---|---|---|---|---|
| 1 | 2 | 3 | 4 | 5 | 6 | 7 | 8 | 9 | 10 | 11 | 12 | 13 |
| 14 | 15 | 16 | 17 | 18 | 19 | 20 | 21 | 22 | 23 | 24 | 25 | 26 |
| 27 | 28 | 29 | 30 | 31 | 32 | 33 | 34 | 35 | 36 | 37 | 38 | 39 |
| 40 | 41 | 42 | 43 | 44 | 45 | 46 | 47 | 48 | 49 | 50 | 51 | 52 |
| 53 | 54 | 55 | 56 | 57 | 58 | 59 | 60 | 61 | 62 | 63 | 64 | 65 |
| 66 | 67 | 68 | 69 | 70 | 71 | 72 | 73 | 74 | 75 | 76 | 77 | 78 |
| 79 | 80 | 81 | 82 | 83 | 84 | 85 | 86 | 87 | 88 | 89 | 90 | 91 |
| 92 | 93 | 94 | 95 | 96 | 97 | 98 | 99 | 100 | 101 | 102 | 103 | 104 |

Legend:

- Power
- Ground
- IN Power Input
- OUT Power Output
- GPIO Digital External
- Analog External
- Main Part
- Secondary Part
- Internal Component
- Other Pins (Reset, System Control, Debugging)
- I2C — D Default
- SPI — D Default
- UART/USART — D Default
- Other SERIAL
- Analog — D Default
- PWM/Timer
- LED
- RGB LED

ARDUINO UNO Q

SKU code: ABX00162-ABX00173
Full Pinout - Page 3 of 4
Last update: 17 Feb, 2026

DOCS.ARDUINO.CC

This work is licensed under the Creative Commons Attribution-ShareAlike 4.0 International License. To view a copy of this license, visit http://creativecommons.org/licenses/by-sa/4.0/ or send a letter to Creative Commons, PO Box 1866, Mountain View, CA 94042, USA.

# JMISC

| | | | | | |
|---|---|---|---|---|---|
| PC6 | MCU_PSSI_D0 | 1 | 2 | MCU_SDMMC1_CMD | PD2 |
| PC7 | MCU_PSSI_D1 | 3 | 4 | MCU_TRACE_CLK | PE2 |
| PC8 | MCU_PSSI_D2 | 5 | 6 | MCU_TRACE_D0 | PE3 |
| PC9 | MCU_PSSI_D3 | 7 | 8 | MCU_TRACE_D2 | PE5 |
| PE4 | MCU_PSSI_D4 | 9 | 10 | MCU_TRACE_D3 | PE6 |
| PI4 | MCU_PSSI_D5 | 11 | 12 | MCU_PE7 | PE7 |
| PI6 | MCU_PSSI_D6 | 13 | 14 | MCU_PE8 | PE8 |
| PI7 | MCU_PSSI_D7 | 15 | 16 | MCU_I2C4_SCL | PF14 |
| PD9 | MCU_PSSI_PDCK | 17 | 18 | MCU_I2C4_SDA | PF15 |
| PI5 | MCU_PSSI_RDY | 19 | 20 | MCU_OPAMP1_VOUT | PA3 |
| PD8 | MCU_PSSI_DE | 21 | 22 | MCU_OPAMP1_VINP | PA0 |
| PA8 | MCU_MCO | 23 | 24 | MCU_OPAMP1_VINM | PA1 |
| PA10 | MCU_CRS_SYNC | 25 | 26 | GND | |
| | GND | 27 | 28 | EAR_P_R | |
| | MIC2_INP | 29 | 30 | EAR_M_R | |
| | MIC2_INM | 31 | 32 | LINEOUT_P | |
| | MIC2_BIAS | 33 | 34 | LINEOUT_M | |
| | GND | 35 | 36 | HPH_L | |
| | SOC_GPIO_0_SE0 | 37 | 38 | HPH_R | |
| | SOC_GPIO_1_SE0 | 39 | 40 | HPH_REF | |
| | SOC_GPIO_2_SE0 | 41 | 42 | HS_DET | |
| | SOC_GPIO_3_SE0 | 43 | 44 | GND | |
| | SOC_GPIO_86_SE0 | 45 | 46 | SOC_GPIO_98 | |
| | SOC_GPIO_82_SE0 | 47 | 48 | SOC_GPIO_99 | |
| | SOC_GPIO_18 | 49 | 50 | SOC_GPIO_100 | |
| | SOC_GPIO_28 | 51 | 52 | SOC_GPIO_101 | |
| | +3V3 OUT | 53 | 54 | OUT +5V USB | |
| | +3V3 OUT | 55 | 56 | OUT +5V USB | |
| | +1V8 OUT | 57 | 58 | GND | |
| | VCOIN IN | 59 | 60 | OUT VBAT | |

These pins can not be used as regular GPIOs.

MCU Pins
3.3V Logic

MPU Pins
1.8V Logic

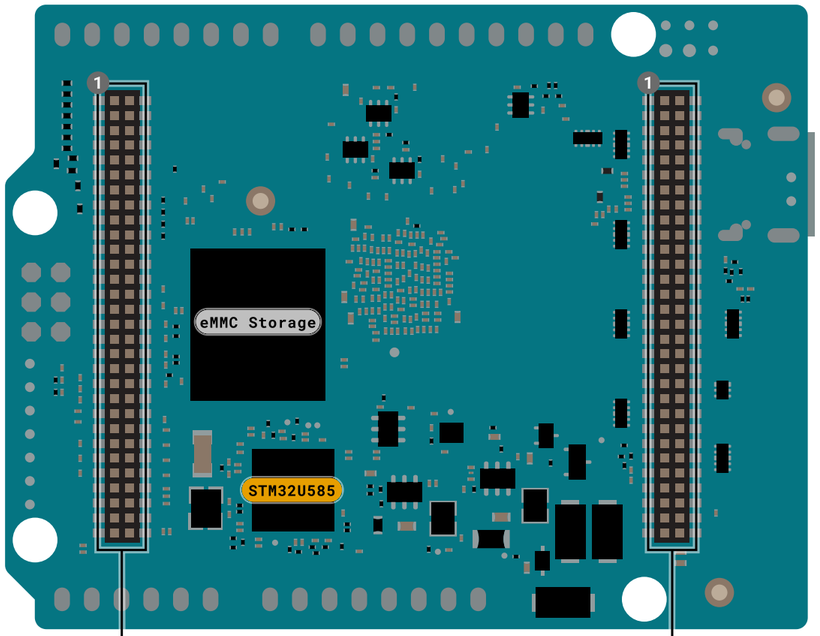


# JMEDIA

| | | | | | |
|---|---|---|---|---|---|
| | GND | 1 | 2 | GND | |
| | MIPI_DSI0_CLK_M | 3 | 4 | MIPI_DSI0_L1_P | |
| | MIPI_DSI0_CLK_P | 5 | 6 | MIPI_DSI0_L1_M | |
| | GND | 7 | 8 | GND | |
| | MIPI_DSI0_L2_M | 9 | 10 | MIPI_DSI0_L0_P | |
| | MIPI_DSI0_L2_P | 11 | 12 | MIPI_DSI0_L0_M | |
| | GND | 13 | 14 | GND | |
| | MIPI_DSI0_L3_M | 15 | 16 | SOC_CAM_MCLK0 | GPIO_20 |
| | MIPI_DSI0_L3_P | 17 | 18 | SOC_CAM_MCLK1 | GPIO_21 |
| | GND | 19 | 20 | GND | |
| | CSI0_C0_LN0_M | 21 | 22 | CCI_I2C_SDA1 | GPIO_29 |
| | CSI0_B0_LN0_P | 23 | 24 | CCI_I2C_SCL1 | GPIO_30 |
| | GND | 25 | 26 | GND | |
| | CSI0_B1_LN1_M | 27 | 28 | CSI1_B2_LN3_P | |
| | CSI0_A1_LN1_P | 29 | 30 | CSI1_C2_LN3_M | |
| | GND | 31 | 32 | GND | |
| | CSI0_A0_CLK_M | 33 | 34 | CSI1_C1_LN2_P | |
| | CSI0_NC_CLK_P | 35 | 36 | CSI1_A2_LN2_M | |
| | GND | 37 | 38 | GND | |
| | CSI0_A2_LN2_M | 39 | 40 | CSI1_NC_CLK_P | |
| | CSI0_C1_LN2_P | 41 | 42 | CSI1_A0_CLK_M | |
| | GND | 43 | 44 | GND | |
| | CSI0_C2_LN3_M | 45 | 46 | CSI1_A1_LN1_P | |
| | CSI0_B2_LN3_P | 47 | 48 | CSI1_B1_LN1_M | |
| | GND | 49 | 50 | GND | |
| GPIO_23 | CCI_I2C_SCL0 | 51 | 52 | CSI1_B0_LN0_P | |
| GPIO_22 | CCI_I2C_SDA0 | 53 | 54 | CSI1_C0_LN0_M | |
| | GND | 55 | 56 | GND | |
| | VIN IN | 57 | 58 | OUT +3V3 | |
| | VIN IN | 59 | 60 | OUT +3V3 | |

These pins can not be used as regular GPIOs.

**Legend:**

- Power
- Ground
- IN Power Input
- OUT Power Output
- GPIO Digital External
- Analog External
- Main Part
- Secondary Part
- Internal Component
- Other Pins (Reset, System Control, Debugging)
- I2C — D Default
- SPI — D Default
- UART/USART — D Default
- Other SERIAL
- Analog Audio — D Default
- PWM/Timer
- LED
- RGB LED

**WARNING** Be aware of the pins logic level.

Analog Audio functionality is provided by the PMIC

CIPO/COPI have previously been referred to as MISO/MOSI

ARDUINO UNO Q

SKU code: ABX00162-ABX00173
Full Pinout - Page 4 of 4
Last update: 17 Feb, 2026

DOCS.ARDUINO.CC

This work is licensed under the Creative Commons Attribution-ShareAlike 4.0 International License. To view a copy of this license, visit http://creativecommons.org/licenses/by-sa/4.0/ or send a letter to Creative Commons, PO Box 1866, Mountain View, CA 94042, USA.